
100
102
104
106
108
110
112
114
116
118
120
122

FIG. 1A

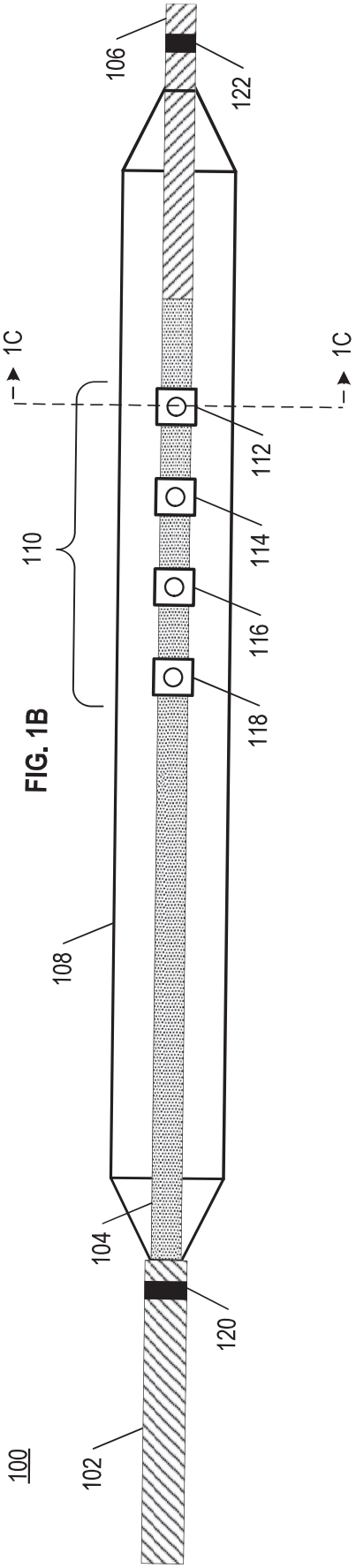
100
102
104
106
108
110
112
114
116
118
120
122
1C
1C

FIG. 1B

FIG. 1C

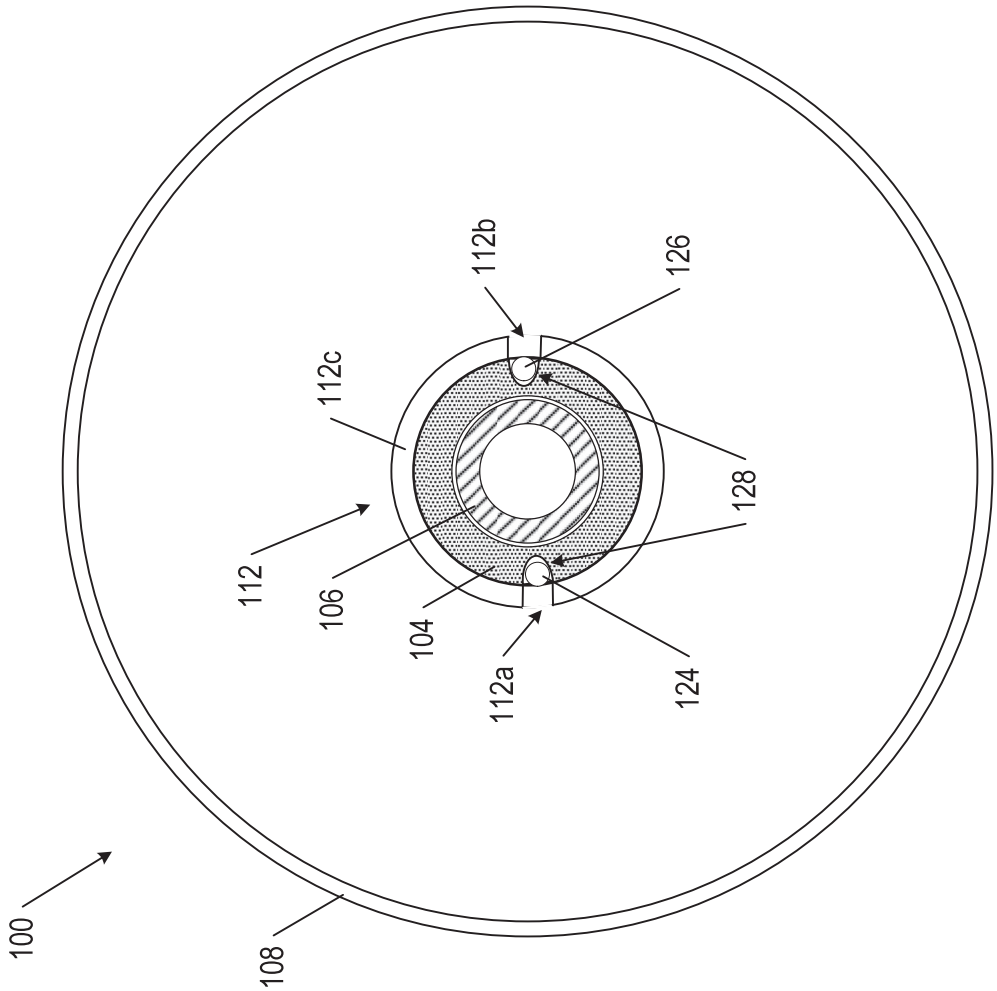

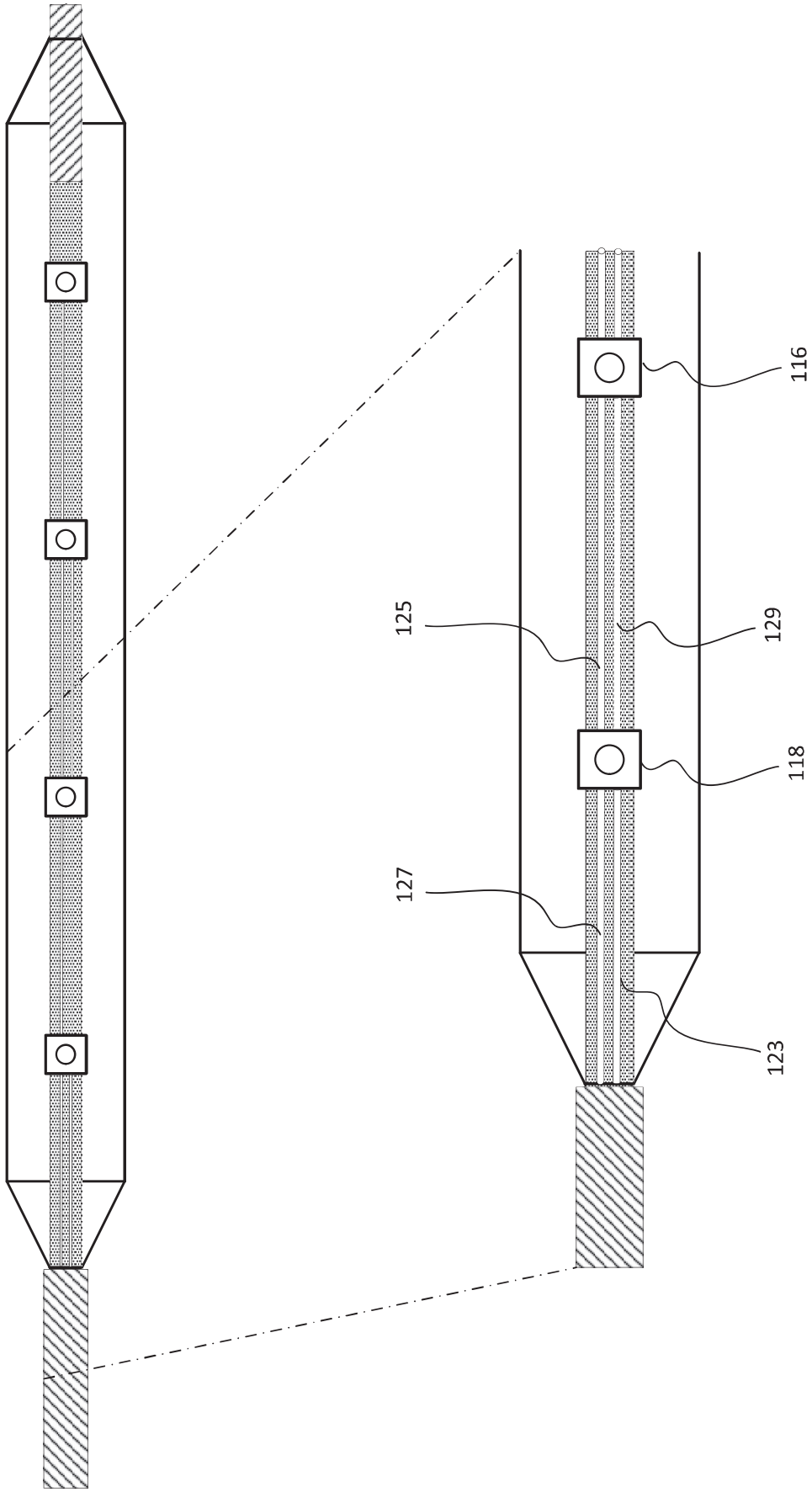

FIG. 1D

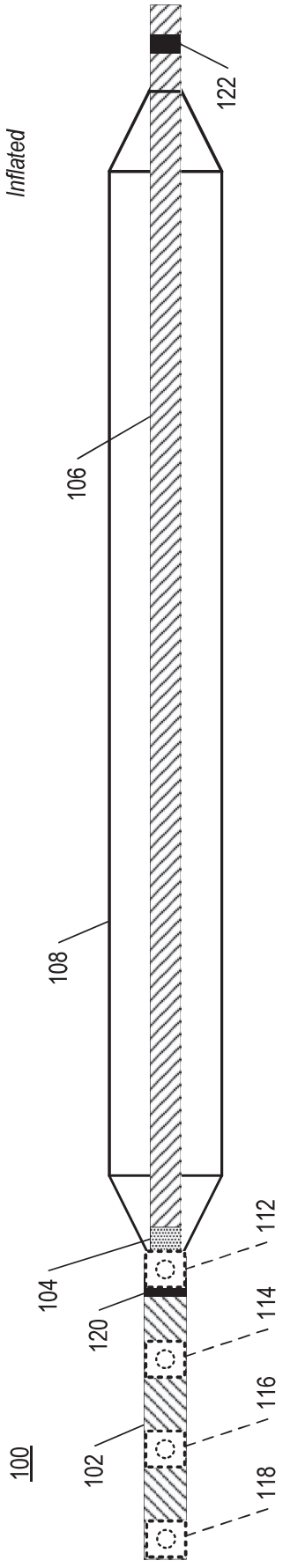
Inflated
122
106
108
104
120
112
114
116
102
118
100

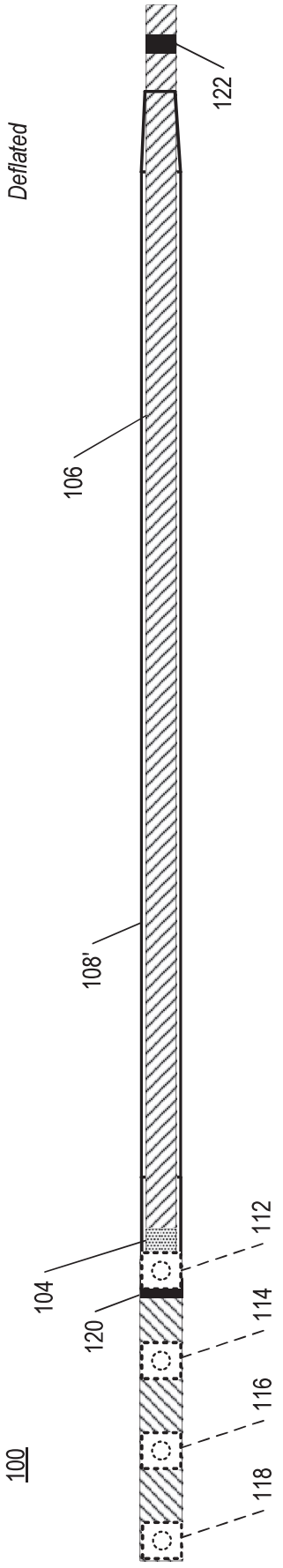
Deflated
122
106
108'
104
120
112
114
116
118
100

FIG. 1E

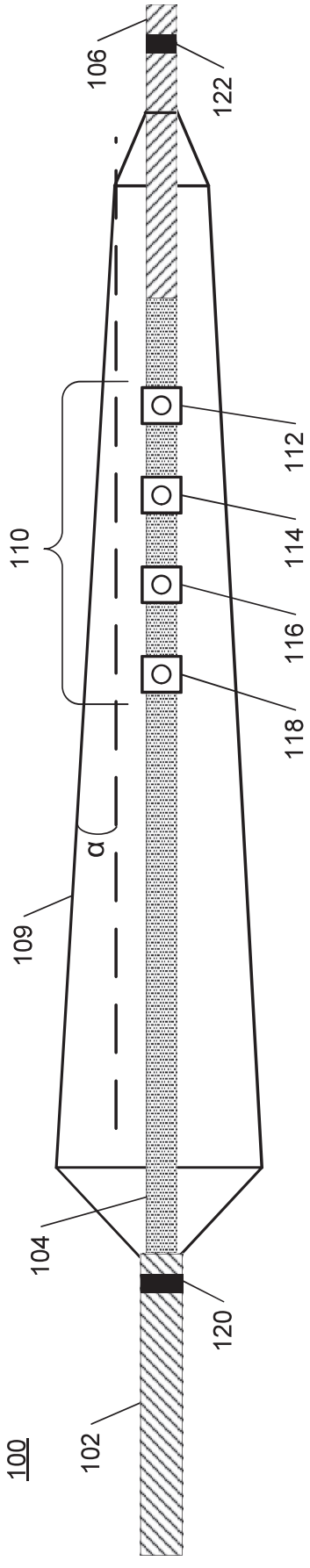

FIG. 1F

FIG. 1G

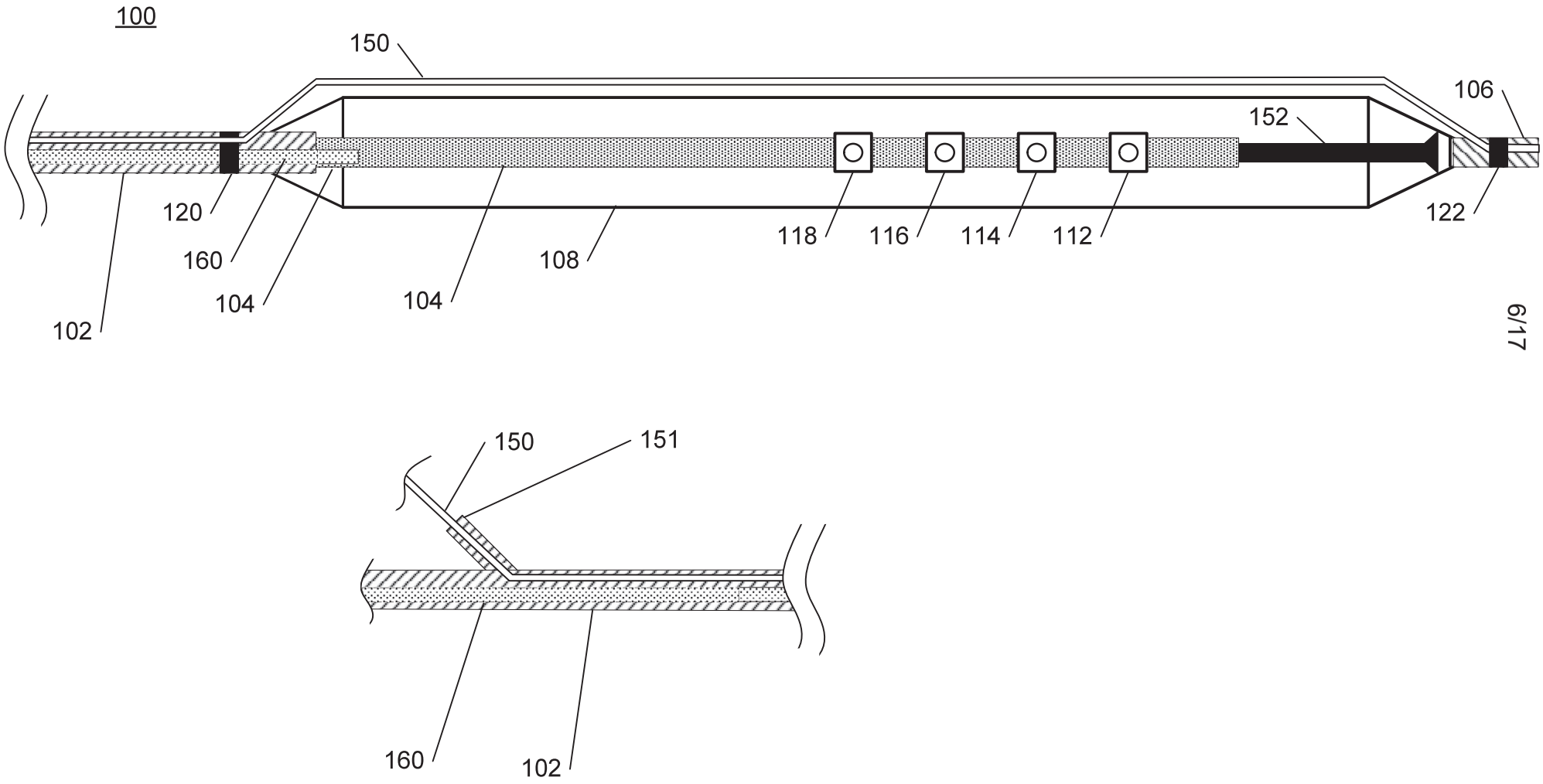
100
150
106
152
120
160
104
104
108
118
116
114
112
122
102
150
151
160
102

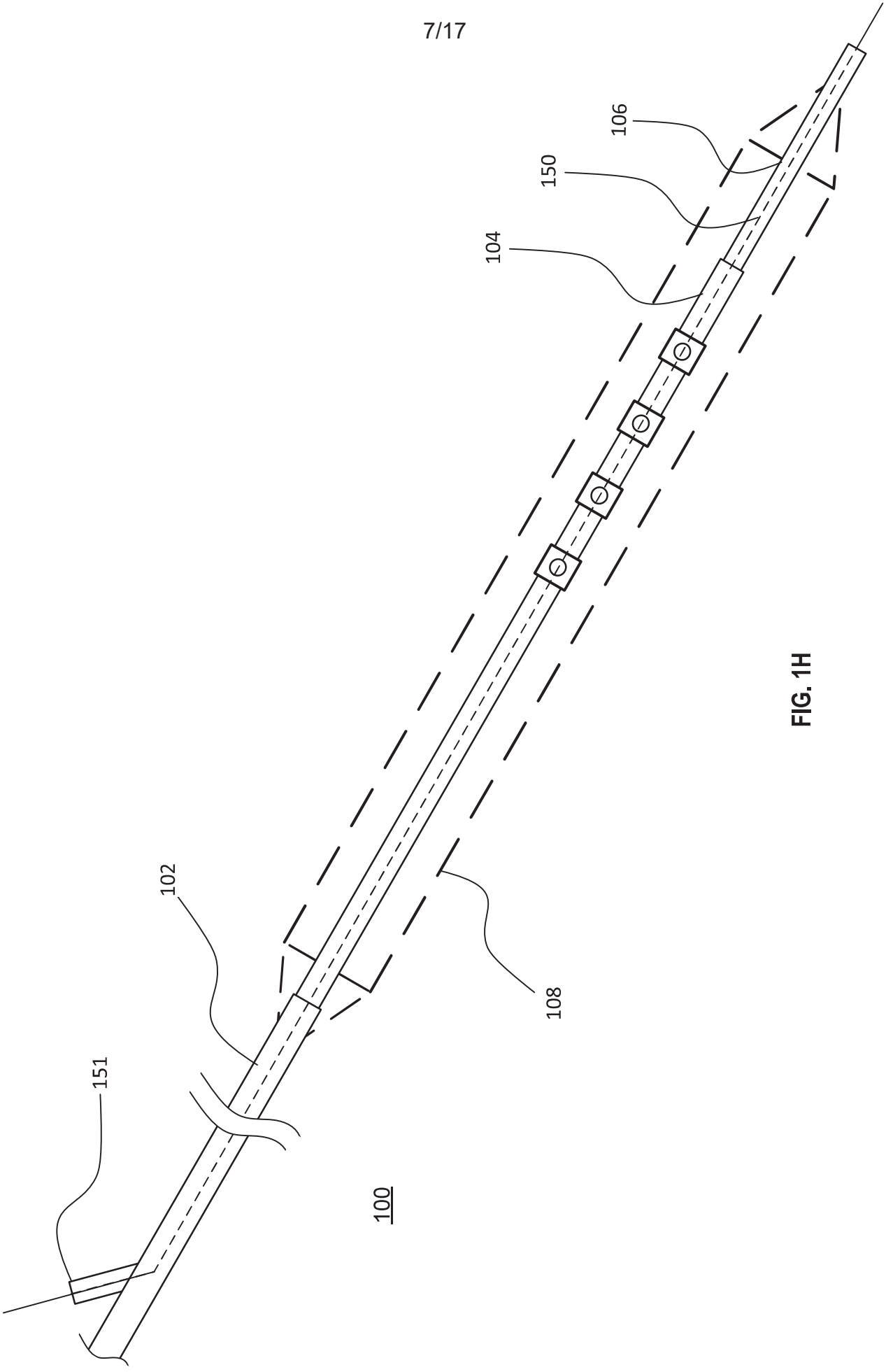

FIG. 1H

FIG. 1I

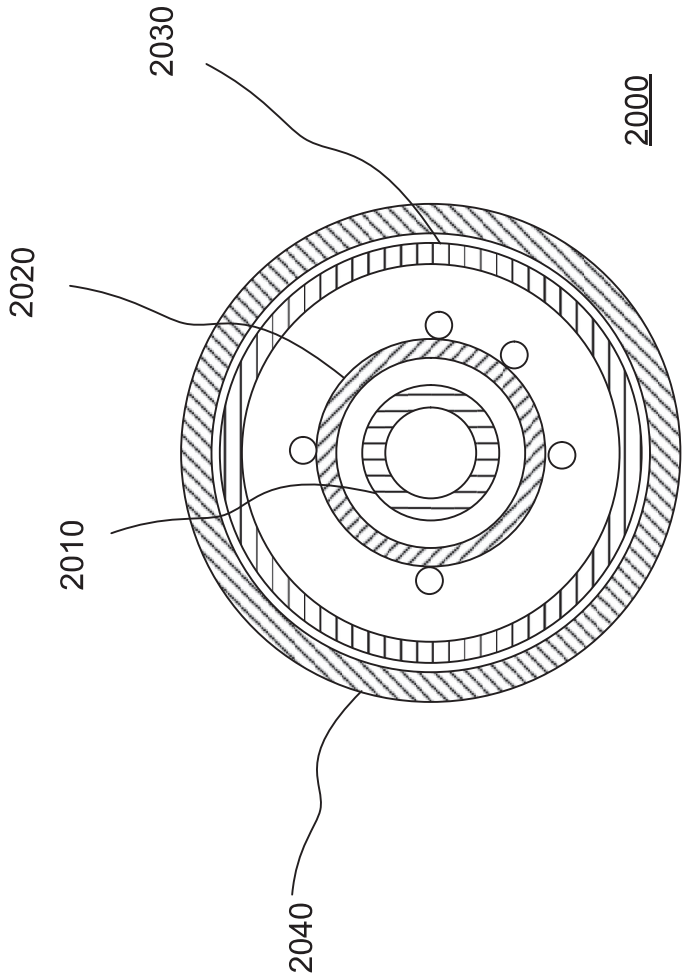

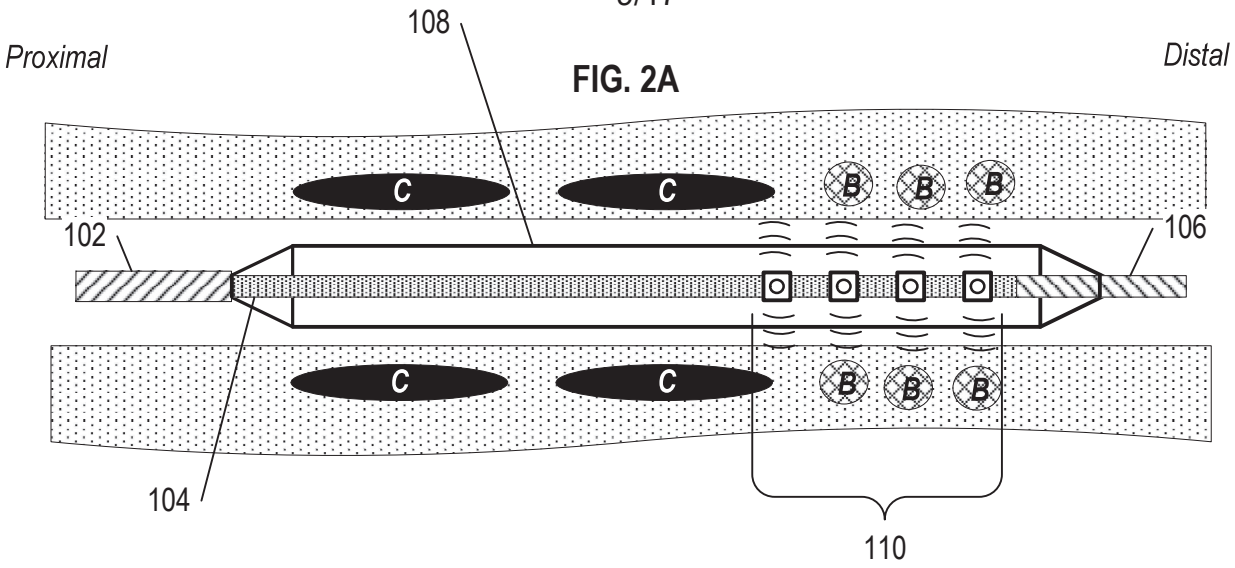

FIG. 2A

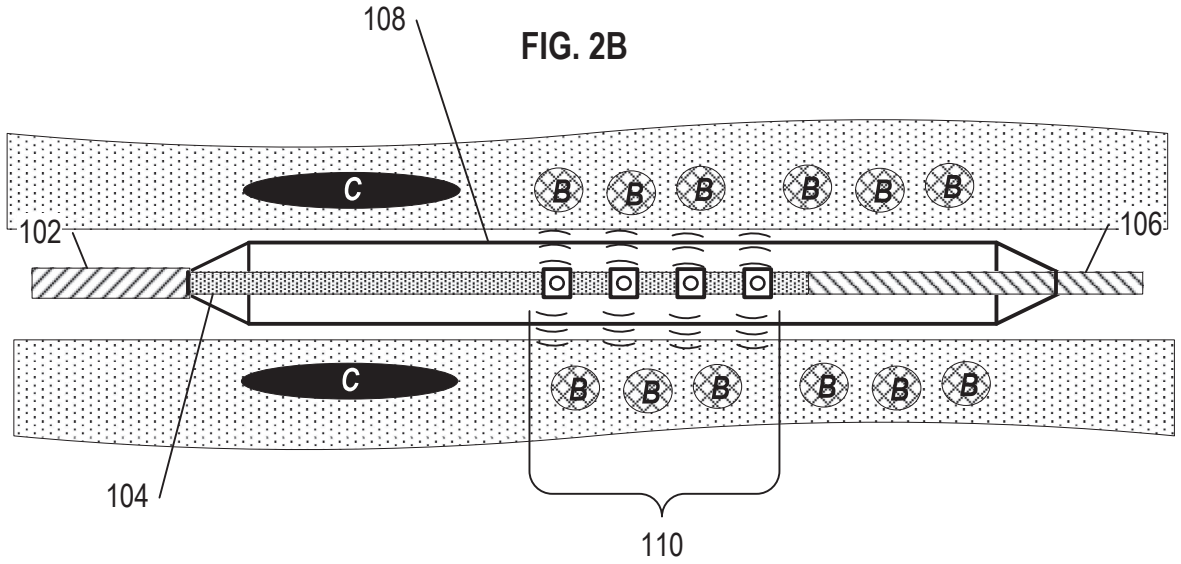

FIG. 2B

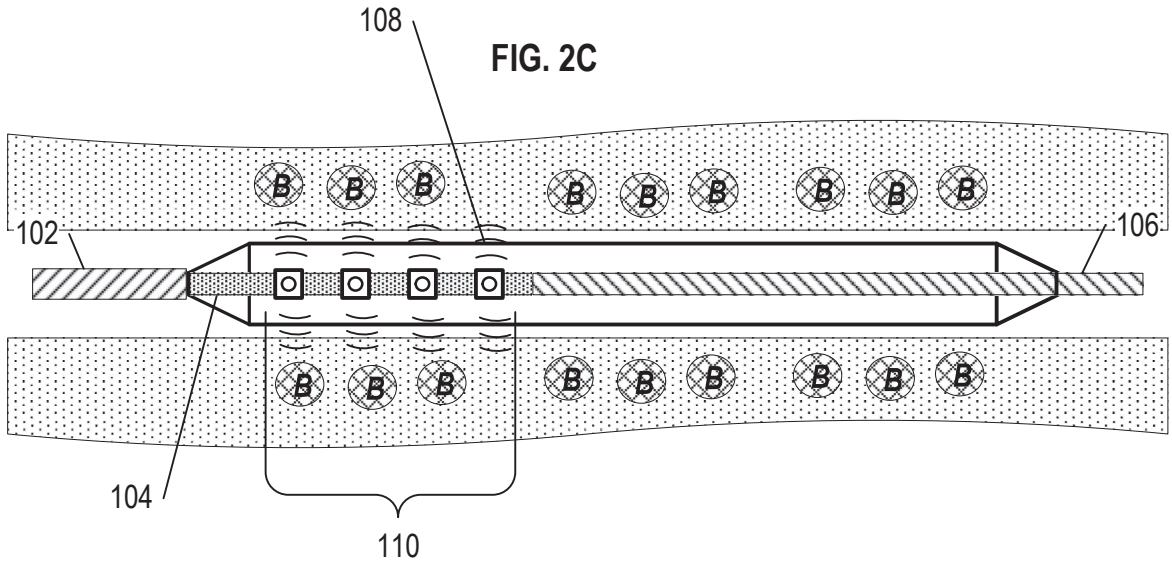

FIG. 2C

FIG. 3

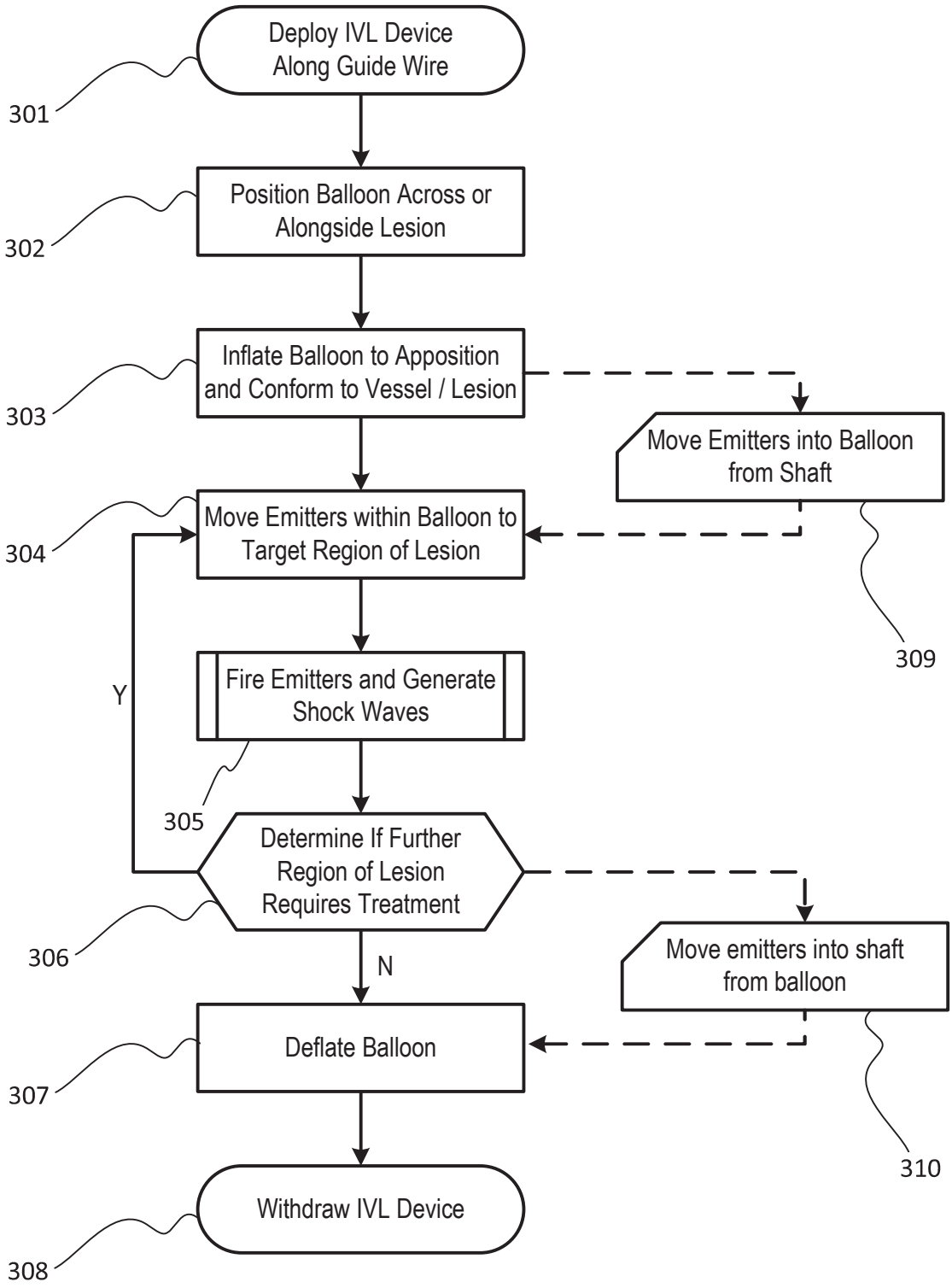
Deploy IVL Device Along Guide Wire
301
Position Balloon Across or Alongside Lesion
302
Inflate Balloon to Apposition and Conform to Vessel / Lesion
303
Move Emitters into Balloon from Shaft
309
Move Emitters within Balloon to Target Region of Lesion
304
Y
Fire Emitters and Generate Shock Waves
305
Determine If Further Region of Lesion Requires Treatment
306
N
Move emitters into shaft from balloon
310
Deflate Balloon
307
Withdraw IVL Device
308

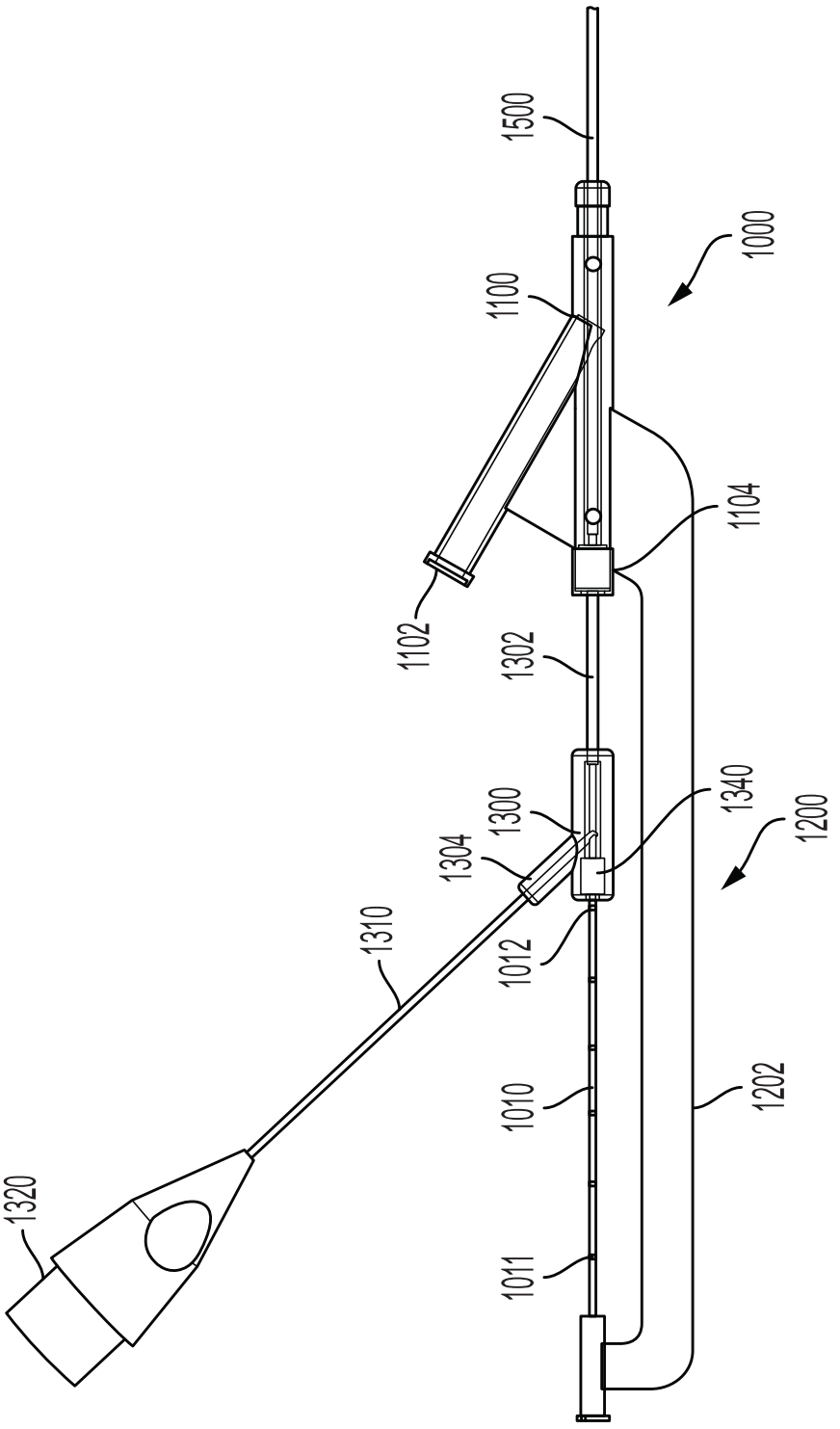
1500
1000
1100
1104
1102
1302
1340
1300
1200
1304
1310
1012
1010
1202
1320
1011

FIG. 4A

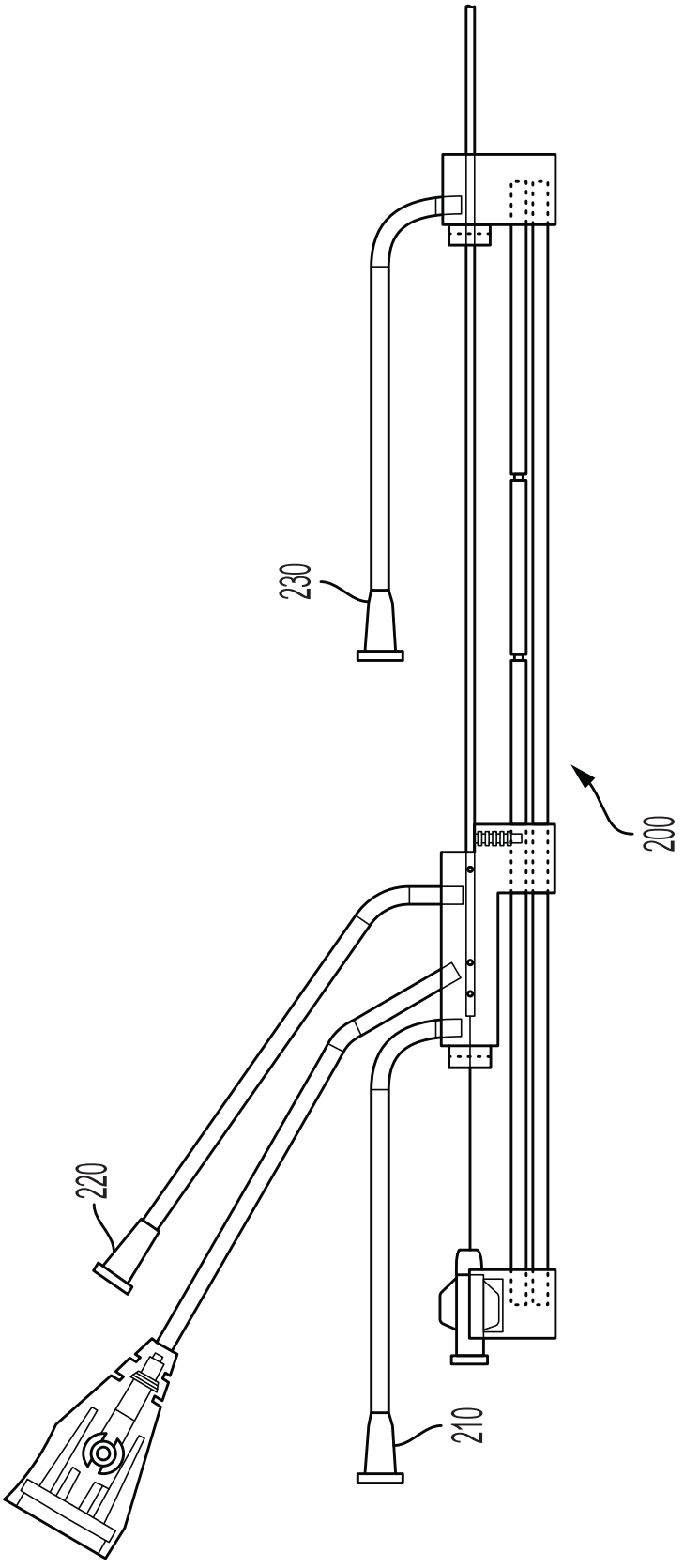

FIG. 4B

FIG. 5A

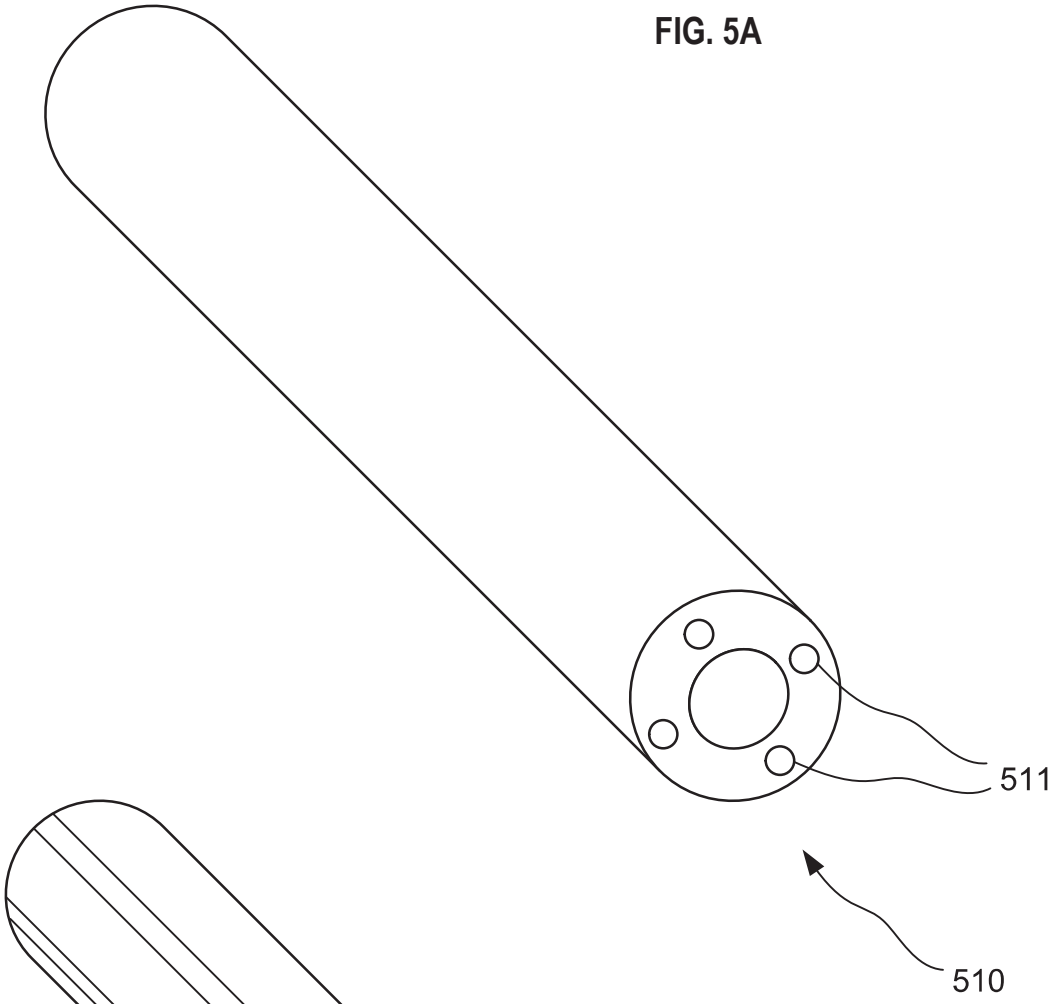

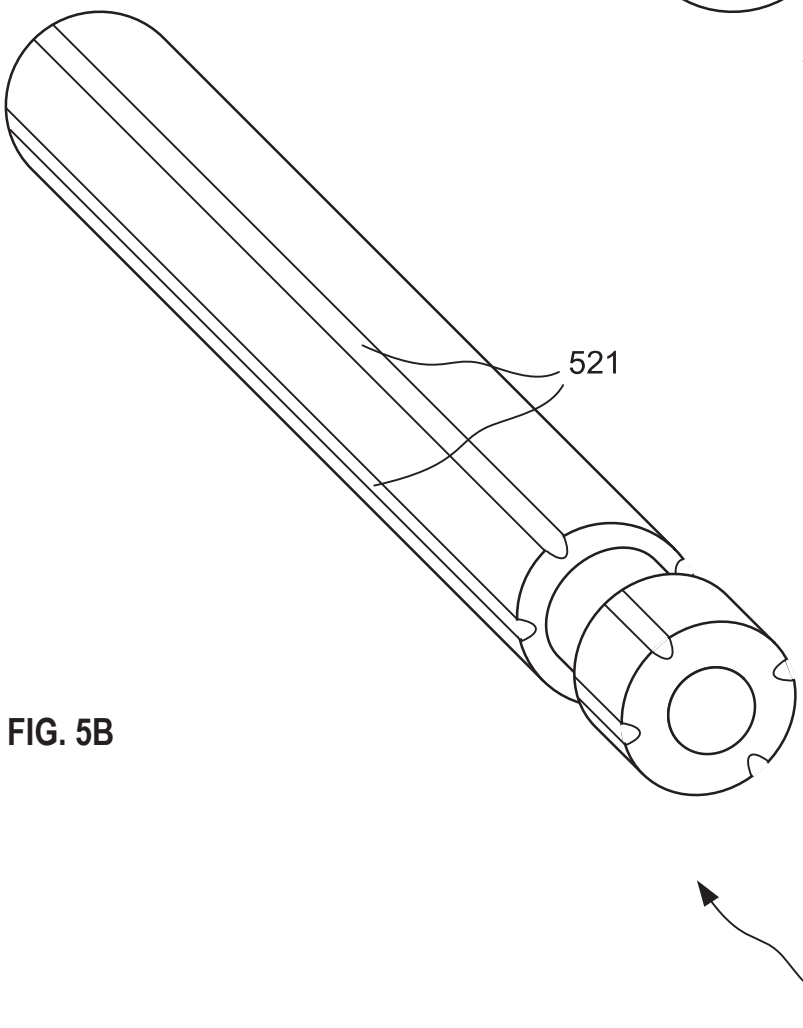

FIG. 5B

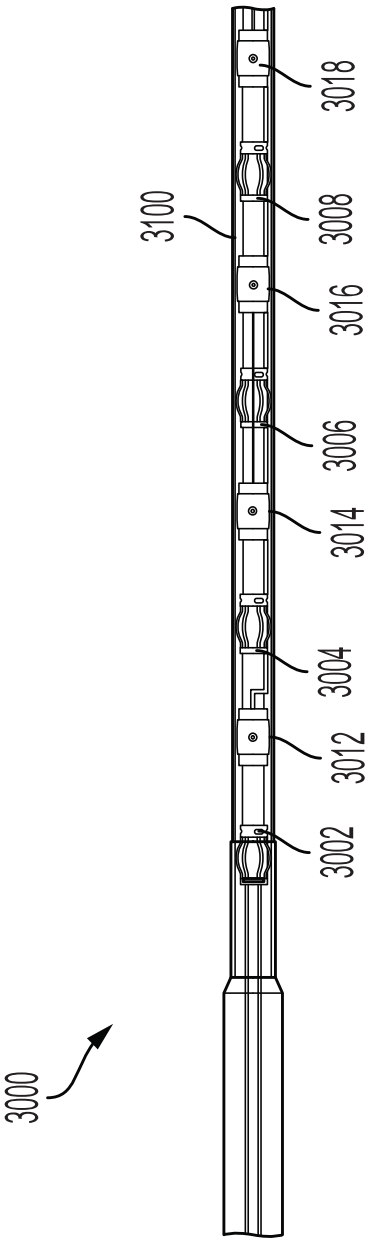
3000
3100
3018
3008
3016
3006
3014
3004
3012
3002

FIG. 6A

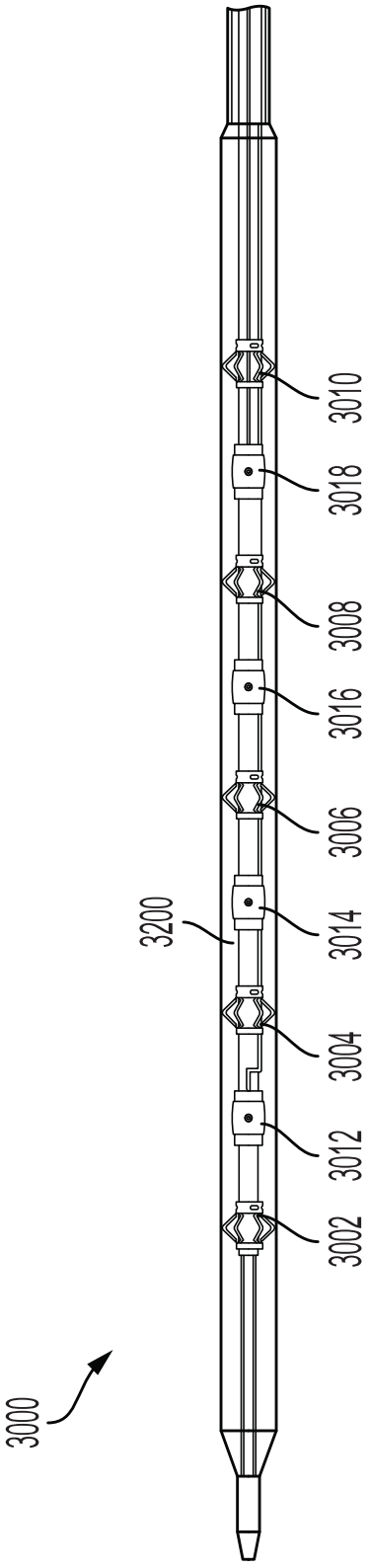
3000
3200
3010
3018
3008
3016
3006
3014
3004
3012
3002

FIG. 6B

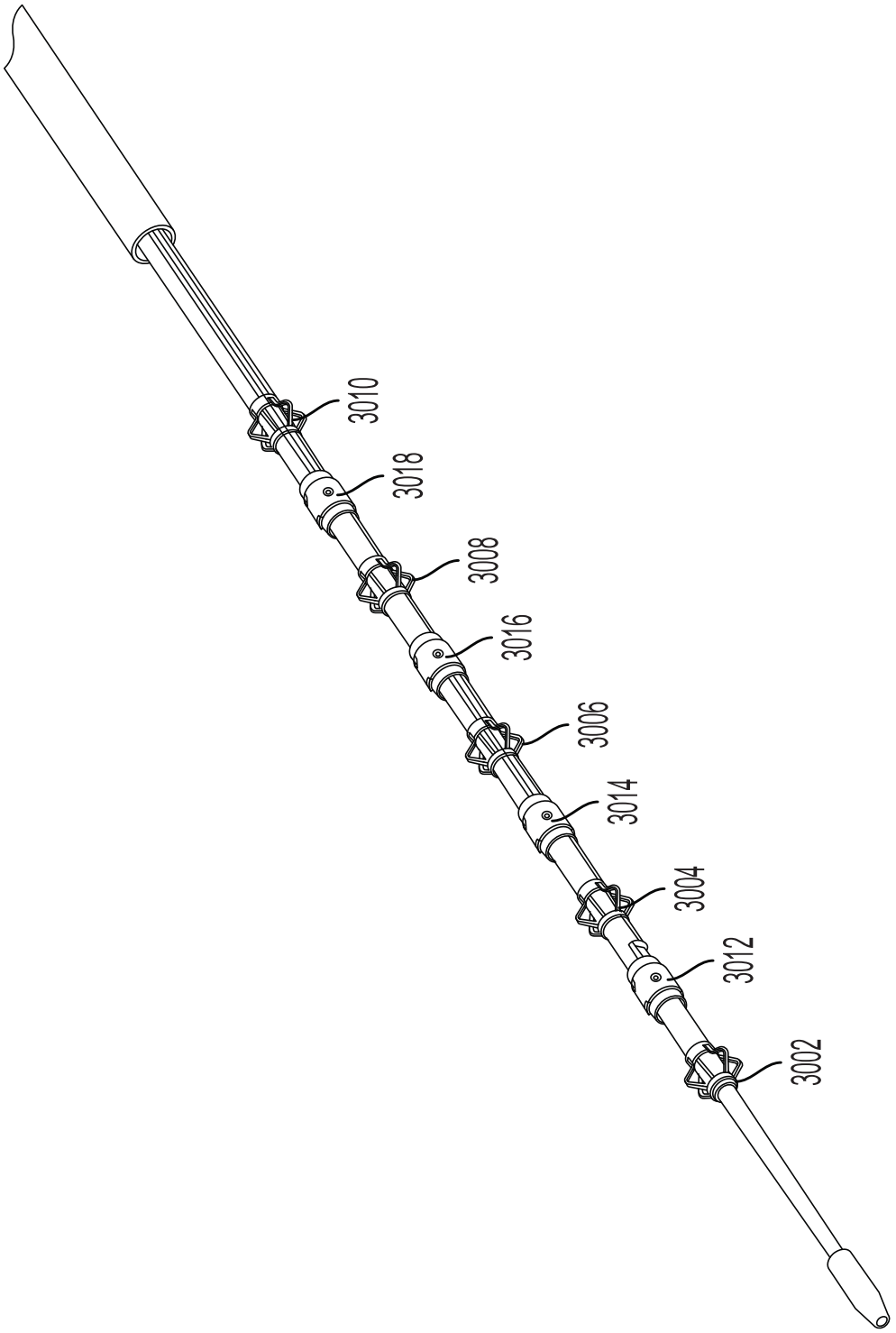

FIG. 6C

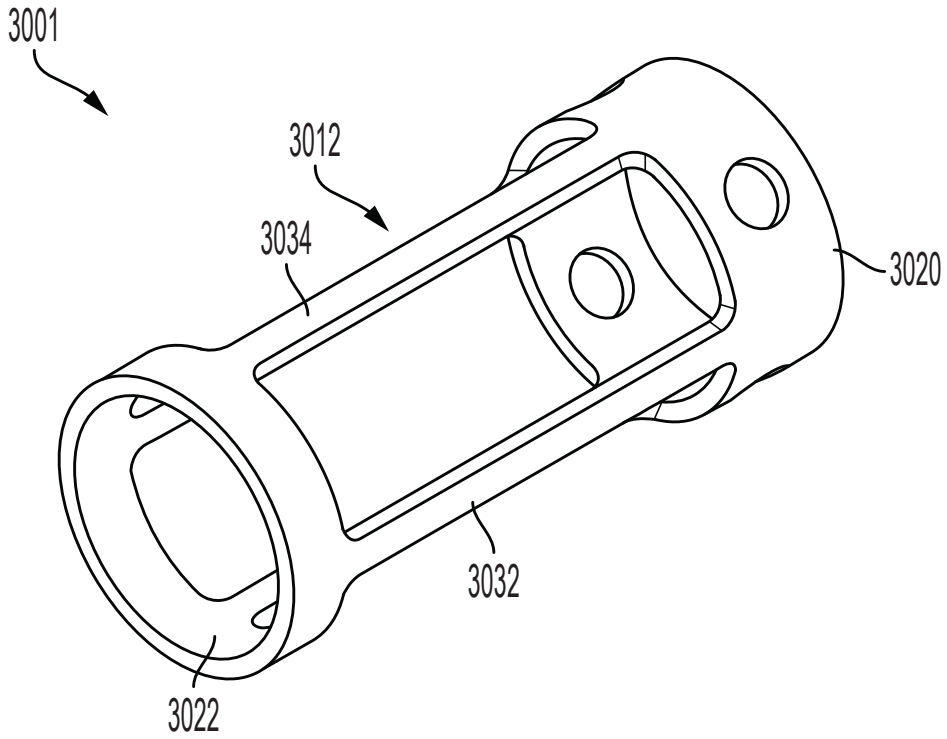

FIG. 6D

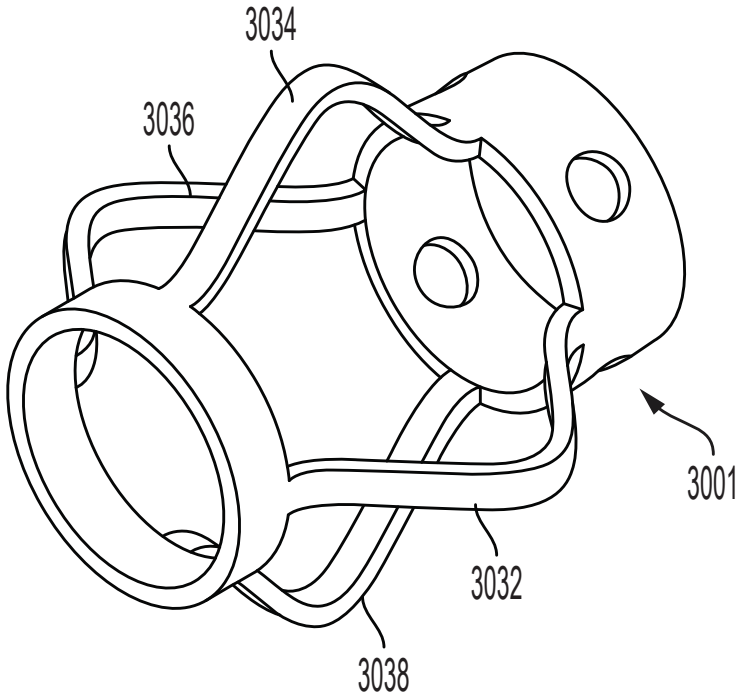

FIG. 6E

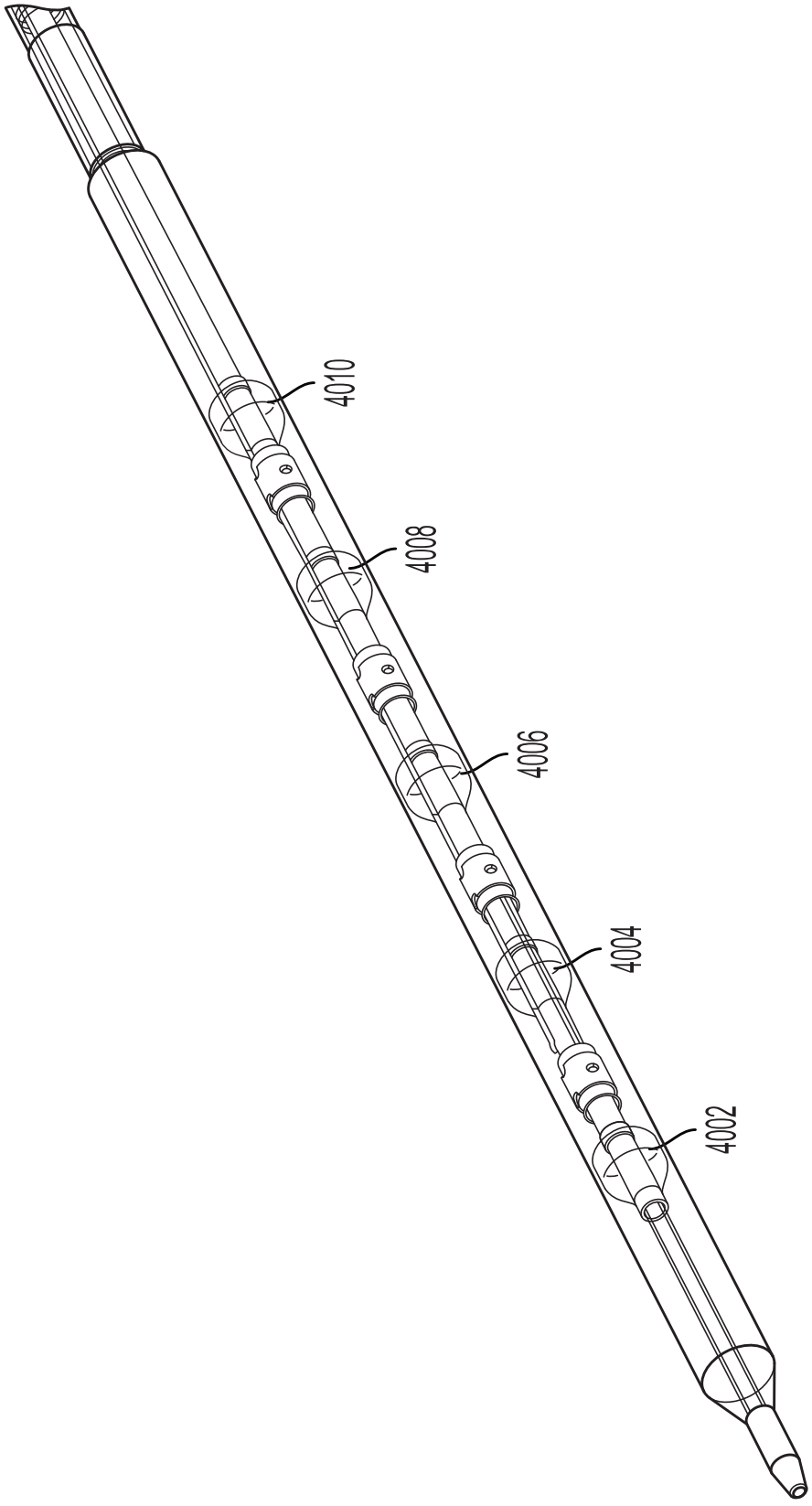

FIG. 7