ELEVATED CABLEWAY SYSTEM

Background of the Invention

Field of the Invention

This invention pertains to elevated cableway systems used in mass transit systems and the like, and, more particularly, to an improved cableway for such systems.

Description of the Prior Art

Many types of elevated cableway systems have been used in or proposed for mass transit systems. One such system is disclosed and claimed in United States Letters Patent 4,069,765 issued January 24, 1978 to Gerhard Müller. This system is neither a suspension, or cable stayed bridge nor an aerial tramway. Consequently, not all standard design criteria are necessarily applicable to the system in the Müller '765 patent.

Thus the Müller '765 patent discloses a non-standard approach and Figures 1-5 of the present application correspond to Figures 3-7 of the Müller '765 patent. Figure 1 illustrates in gross an elevated cableway system 10 in which vehicle 12 travels along track cable systems 14 suspended from catenary, or support cable 16. As shown in Figures 2-3 and 5, track cable systems 14 comprises locked-coil steel cables 14a-d and catenary cable system 16 comprises locked-coil steel cables 16a-b. Returning to Figure 1, a plurality of pylons 18 elevate and support track cable systems 14 and catenary cable system 16 between the termini 20 of system 10. Track cable systems 14 and catenary cable system 16 are preferably anchored to ground 19 to sustain horizontal cable forces and transmit them to ground 19.

One of Müller's basic approaches is illustrated in Figures 1-2. Stress loads associated with the "sag" in track cable systems 14 and catenary cable system 16 caused by the weight of vehicle 12 were a problem for cableway

systems at the time Müller filed the '765 patent application as shown in Figure 1. Müller proposed, as disclosed in the '765 patent, to address these problems by pre-tensioning, or pre-stressing, track cable systems 14 so that track cable systems 14 levelled under the weight of vehicle 12 as shown in Figure 1.

Part of Müller's proposed design included new cross-ties 15 and hangers, or spacers, 7 for suspending track cable systems 14 from catenary cable system 16. These cross-ties 15 and hangers 7, which were new at the time, are illustrated in Figures 2-3. Through this suspension system, track cable systems 14 were tensioned as described above and, consequently, "bowed" upward when not weighted by vehicle 12. This approach has worked well and is incorporated in the present invention as set forth below.

Müller also proposed tying track cable systems 14 and catenary cable system 16 together between pylons 18 at points 22 as shown in Figure 4. Müller tied the cables with force equalization plate 24, in cooperation with clamping plate 26 and wedges 28. Force equalization plate 24 also improved the distribution of load stresses in the cableway system and, in combination with tensioning track cable systems 14, substantially advanced the art.

Müller also adopted the pylon structure earlier disclosed in United States Letters Patent 3,753,406. As set forth in column 1, line 65 to column 2, line 3 of the '765 patent, it was thought the pylons in such a system must be "stiff". It was though that "self-aligning" or "self-adjusting" pylons would introduce undesirable longitudinal shifting between the catenary and track cables. However, we now know that "self-aligning" or "self-adjusting" pylons produce substantial design benefits provided measures are taken to minimize or eliminate longitudinal shifting.

Some problems also appeared in implementing Müller's design despite its great advance over the art. For instance:

(1) catenary cable system 16 was strung over rollers on the top of pylons 18 and began to wear from the movement across the rollers as vehicle 12 traversed the cableway;

(2) the design of the equalizer plate 24 could also cause problems by kinking cable elements 16a-b, and 14a-d, under some circumstances; and

(3) cable elements 14a-d were required to have upper surfaces engageable by the wheels of the vehicle because the equalizer plate did not provide for such engagement.

It further came to be realized that load stresses could be better distributed through redesign of the force equalizing assembly as well as the hangers and cross-ties, particularly in light of the new pylon designs.

United States Pat. No. 4,264,996 by Baltensperger and Pfister describes a suspended railway system with towers that support a catenary cable atop the towers and support track cables with a "stressing beam" that is pivotally connected to the towers. The '996 system is, however, distinguishably less capable than the present invention. For instance, the '996 patent fails to grasp the catenary cable at the support on top of the tower. Therefore, as described in the '996 patent, the cable is allowed to slip in the notches of the support. This slippage will inevitably cause wear on the cables.

Additionally, while the stressing beam gives some measure of weight redistribution at the track cable support, the fact that there is only one beam and the fact that the beam merely pivots about a single point ensures that the impact with the support of a vehicle passing over the support will not be substantially lessened. When weight is applied to one end of the beam, the other end of the beam necessarily must tilt upwardly thereby creating a ramp for a vehicle traversing the track to climb. With only a single beam, the tilt of the beam cannot be lessened until the vehicle passes each point along the beam. If the

beam had secondary and tertiary beams connected to it as the present invention does, the moment about the central pivot point could be lessened in advance of the vehicle. With secondary and tertiary beams, the point of applied load is the point where the secondary beam attaches to the main beam, not the point the vehicle is passing.

It is therefore a feature of this invention that it provides an improved pylon design for elevated cableway systems.

It is furthermore a feature of this invention that the improved pylon design reduces wear on the catenary cable system by not allowing the catenary cable system to slide or role directly on the top of the pylon.

It is furthermore a feature of this invention that the improved pylon includes a new, deflecting upper saddle to support the catenary cable system while relieving stresses imposed on the catenary cable system by deflecting under load applied by the vehicle traversing the track cable system.

It is a still further feature of this invention that the improved pylon includes an improved, pivotable lower saddle to better transmit forces and distribute load stresses through the cableway system as the vehicle traverses the cableway.

It is furthermore a feature of this invention that load stresses are distributed through improved hanger and spacer designs.

It is still furthermore a feature of this invention that it provides an improved cableway system with greater lateral support for the union between the catenary and track cable systems by providing improved force equalizing assemblies.

It is still furthermore a feature of this invention that it provides an alternate force equalizing assembly that reduces wear on the catenary cable system and the track cable systems by allowing the cables to controllably yield relative to one another as force is transferred

between them.

SUMMARY OF THE INVENTION

The features described above, as well as other features and advantages, are provided by an improved cableway system that includes a pylon, an upper saddle, and a lower saddle. The pylon includes a base pylon, and the lower saddle is mounted to the base pylon from which a track cable may be strung. The upper saddle, from which a catenary cable system may be strung, is movably mounted to the base pylon to deflect in response to the weight of a vehicle traversing the track cable systems.

The improved pylon also includes in some embodiments a new lower saddle including a main beam pivotally mounted at the center of its longitudinal axis to the pylon for rotation in a first vertical plane. A pair of secondary beams are each pivotally mounted at the center of its longitudinal axis to the main beam substantially at a respective end of the main beam for rotation in the first vertical plane. Four tertiary beams are each pivotally mounted at the center of its longitudinal axis to one of the respective secondary beams substantially at a respective end of the one secondary beam for rotation in the first vertical plane. Eight suspension rods are each pivotally mounted at one of its ends to one of the respective tertiary beams substantially at a respective end of the one tertiary beam for rotation in the first vertical plane. The other end of each suspension rod is pivotally connected to a cross-tie at the center of the cross-tie's longitudinal axis for rotation of the cross-tie in a second vertical plane that is perpendicular to the first vertical plane. The cross-tie supports the second cable. Four shock absorbers are each pivotally mounted at one of its ends to one of the respective tertiary beams, and the other end of each shock absorber is pivotally connected to a cross-tie near another end of a suspension rod that is connected substantially at the other end of the tertiary

beam to which the one end of the shock absorber is connected. Four bracing rods are each pivotally mounted at one of its ends to a cross-tie near a lower end of a first suspension rod. Another end of each bracing rod is pivotally connected to a cross-tie at a lower end of and near a second suspension rod that is connected to an opposite end of a tertiary beam from which the first suspension rod hangs.

The improved cableway system also includes improved hangers and cross-ties comprising a hanger member suspended from the catenary cable system by one end thereof. A cross-tie is pivotably mounted to the hanger member at the end distal to the catenary cable system. A track cable guide is affixed to the cross-tie, and a power rail guide is mounted to the cross-tie.

A force equalizing assembly for joining the catenary cable system to the track cable systems midway between the pylons is also provided to equalize the tension between the support and track cable systems. The assembly includes a force equalization plate having at least three parallel channels formed along the length of a surface thereof is provided for accepting the support cable in the center channel and the track cable systems in the outer channels. The channels are shaped to approximate one-half of the respective cable circumferences, except that the ends of the channels are flared outwardly. The channeled clamping plate has at least three parallel channels formed along the length of a first surface thereof is provided for accepting the support cable in the center channel and the track cable systems in the outer channels. The channels of the clamping plate are shaped to approximate one-half of the respective cable circumferences, except that the ends of the channels are flared outwardly. The channeled clamping plate has a second surface opposite the first surface that is adapted for engagement by the wheels of the cable car. The channeled surfaces of the force equalization plate and the clamping plate are complementary such that the plates

may be assembled about the cables for frictionally locking the cables within the respective channels to equalize the tension in the support and track cable systems. The respective flared ends of the channels in the assembled plates form a frusto-conical cavity in each end of the assembly about each of the cables for reducing wear on the cables by the ends of the plates.

In another improved embodiment of the force equalizing assembly, the cables of the catenary cable system and the track cable systems are grasped about their circumferences by cable connections of a system of cable encasing members. The cables are thereby connected through the cable connections to a frame of the system of cable encasing members for distributing forces among the cable systems. The force equalizing assembly is adapted to accept connection of cables both from angles acute to and parallel with the longitudinal axis of the frame.

In another improved embodiment of the force equalizing assembly, a catenary cable system clamp grasps the catenary cable system and a plurality of track cable system clamps grasp the pair of track cable systems. The track cable system clamps are yieldably attached to the catenary cable system clamp to provided controlled force distribution between the cable systems. The top surface of the plurality of track cable system clamps is adapted for engagement by the wheels of a vehicle traversing the elevated cableway system.

BRIEF DESCRIPTION OF THE DRAWINGS

A more particular description of the invention briefly summarized above can be had by reference to the preferred embodiments illustrated in the drawings in this specification so that the manner in which the above cited features, as well as others that will become apparent, are obtained and can be understood in detail. The drawings illustrate only preferred embodiments of the invention and

are not to be considered limiting of its scope as the invention will admit to other equally effective embodiments. In the drawings:

Figures 1-5 illustrate a prior art cableway system disclosed and claimed in United States Letters Patent 4,069,765 issued January 24, 1978 to Gerhard Müller and correspond to Figures 3-7 therein.

Figure 6 illustrates the pylon of the inventive cableway system described herein, including an upper saddle and a lower saddle, in elevation.

Figures 7A-G illustrate the upper saddle of the new pylon; Figure 7A is a side, elevation view; Figure 7B is a broken isometric view; Figures 7C-D are elevation and plan views, respectively, of the base of the upper saddle in partial section.

Figure 7H illustrates an elevation view of the lower saddle of the pylon in Figure 6; Figure 7I is a plan view of Figure 7H; Figure 7J is a plan view taken along section 7J-7J in Figure 7H; Figure 7K is an elevation view taken along section 7K-7K in Figure 7H; Figure 7L is an elevation view taken along 7L-7L in Figure 7H.

Figures 7M-N and 7P illustrate the transverse connecting frame and main beam of the lower saddle; Figure 7M is a partial elevation view; Figure 7N is a side elevation view taken along section 7N-7N in Figure 7M; Figure 7P is a partial plan view of Figure 7M; and Figure 7Q is an elevation view taken along section line 7Q-7Q of Figure 7M.

Figures 7R-7U illustrate the tertiary beams and suspension rod/cross tie assemblies of the lower saddle; Figure 7R is an elevation view; Figure 7S is a side elevation view taken along section 7S-7S in Figure 7R; Figure 7T is a side elevation view taken along section 7T-7T in Figure 7R; Figure 7U is a plan view taken along section 7U-7U in Figure 7R.

Figures 7V-7X illustrate the equalizing beam of the lower saddle; Figure 7V is an elevation view; Figure 7W is

a plan view of Figure 7V; Figure 7X is a side elevation view taken along section 7X-7X in Figure 7W.

Figure 7Y is a side elevation view of an alternate embodiment of the lower saddle connected to a tubular pylon support beam with stabilizing shock absorber and bracing rods added. Figure 7Z is a partial isometric view of the alternate embodiment of the lower saddle connected to a tubular pylon support beam.

Figure 7AA is a side elevation view of a support pylon showing an upper saddle supported by a tubular base pylon that has an opening in an upper end through which a lower end of an upright extends.

Figures 7AB-7AE illustrate an alternate upper saddle that supports a catenary cable on top of a base pylon through a set of cable clamping wheel assemblies; Figure 7AB is a side elevation view of the alternate upper saddle mounted on top of a base pylon; Figure 7AC is an end elevation view of one of the cable clamping wheel assemblies supported atop a roller base and wheel bearing members; Figure 7AD is a plan view of one of the cable clamping wheel assemblies; Figure 7AE is a side elevation view of one of the cable clamping wheel assemblies.

Figures 8A-B illustrate the hangers, cross-ties, and rails of the track cable systems in the new system in an isometric view; Figure 8A in partially exploded perspective and Figure 8B is in elevation.

Figures 9A-B illustrate the hangers, cross-ties, and power rail of the new system in section along line 9A-9A of Figure 8B and in partial cutaway; Figure 9A shows a horizontal section of the catenary cable system; and Figure 9B shows an inclined section of the catenary cable system.

Figures 10A-C illustrate the cross-ties, cables, and rails of the track cable systems in the new system; Figure 10A in a top view with ghosted lines; Figure 10B in section along line 10B-10B in Figure 10A and in partial cutaway; and Figure 10C in an end view.

Figures 11A-D illustrate a force equalizing assembly

tying the catenary and track cable systems at intermediate points in the span.

Figure 11E shows an isometric view of an alternate force equalizing assembly.

Figures 11F-11L show a second alternate force equalizing assembly; Figure 11F shows an isometric view of the second alternate force equalizing assembly; Figure 11G shows a cross-section through a middle portion of the force equalizing assembly; Figure 11H is a cross-section taken along line A-A as shown in Figure 11G; Figure 11I is a cross-section taken along line B-B as shown in Figure 11G; Figure 11J is a plan view of a portion of the force equalizing assembly; Figure 11K is a cross-section taken along line C-C as shown in Figure 11J; Figure 11L shows an end elevation view of the second alternate force equalizing assembly.

DESCRIPTION OF THE PREFERRED EMBODIMENT

Figure 6 illustrates one of pylons 17 in a preferred embodiment of the elevated cableway system, including upper saddle 30 from which catenary cable system 16 is strung, lower saddle 200 from which track cable systems 14 are strung, and base pylon 21 on which lower saddle 200 is mounted. Hangers 27 suspend track cable systems 14 from catenary cable system 16 and pre-tension track cable systems 14, as described above. Pylon 17 is attached to ground 19 by any suitable technique known to the art. The precise dimensions of pylon 17 such as height and width will be matters of engineering design predicated on well known structural principles to account for structural loads, such as vehicle and cable weight, and for loads arising from environmental conditions such as wind, seismic activity, precipitation and temperature.

Upper saddle 30, shown in greater detail in Figures 7A-C, permits relatively free motion at the top of pylon 17, and transmits vertical loads from vehicle 12 and pre-tensioning forces to pylon 17. Upper saddle 30 lessens

fatigue of catenary cable system 16, requires only limited maintenance, and eases implementation of a desired 7° deviation of pylon 17. Upper saddle 30 comprises upright 32 pivotably mounted to base 34 and is capped by coupling 40, which is engaged with cable connector 42.

Turning now to Figure 7B, coupling 40, cable connector 42, and pin 44 atop upper saddle 30 are shown in an enlarged, partially cutaway view. Supports 50 help bear and distribute the load on coupling 40 to upright 32. Cover 52 provides some protection for coupling 40 and connector 42 from the elements. The socketing and pinned connection of coupling 40 engaged with cable connector 42 reduces the risk of fatigue to catenary cable system 16 caused by the shifting of catenary cable system 16 across pylon 18 of the system in the Müller '765 patent. The embodiment of Figures 7A-C thereby reduces the risk of fatigue failure in catenary cable system 16 by precluding bending fatigue stresses, thus leaving only tension-tension fatigue stress on catenary cable system 16. This connection also permits shorter cable lengths to facilitate transportation, handling and construction of the system.

Coupling 40 in the preferred embodiment is a welded plate assembly including base plate 46 and at least two member plates 48 extending substantially perpendicularly from base plate 46 as shown in Figure 7B. Cable connector 42 is socketed on one end to engage coupling 40. Pin 44 joins cable connector 42 to coupling 40 through co-aligned holes in tines 43 of forked connector 42 and coupling 40 when cable connector 42 and coupling 40 are engaged. The socket and pin connection provided by cable connector 42 must be strong enough to sustain the load on catenary cable system 16 and the loads from environmental conditions. Cables 16a-b are strung in a first direction from the non-connected end of cable connector 42. Coupling 40 is also joined to a second cable connector 42 that provides cable connection to cables 16a-b in a second direction, as shown in Figure 7B.

Cables 16a-b are preferably clamped together as shown in Figure 7E at predetermined intervals using clamps 49 between cable connector 42 and the first one of hangers 27. Clamps 49 are better illustrated in Figures 7F-G and comprise pins 51 joining clamp members 53a-d. Clamp members 53a-d define passages 55a-b through which cable members 16a-b pass.

Passages 55a-b may include flared openings on one or both ends thereof as are discussed in connection with catenary cable clamp 85 and equalizing lock 300. The flared openings of passages 55a-b are best shown in Figure 10C, wherein the lesser diameter at point 57 of passages 55a-b forms the throat of the opening and the greater diameter at point 59 forms the flare. These flared openings minimize the "beam effect" wherein a clamped cable behaves structurally as a beam.

Still referring to the Figure 7B, upright 32 is pivotably mounted to double V-shaped base 34. Base 34, like coupling 40, in the preferred embodiment is a welded plate assembly and comprises bottom plate 54 and side plates 56. Side plates 56 are attached in slotted channels at each end of bottom plate 54, as shown in Figure 7C to define slots into which tongues 58 extend from the bottom of upright 32. Pins 60, preferably constructed from brass to reduce friction, run through co-aligned holes in side plates 56 and tongues 58. Upright 32 supports forces received through coupling 40 and transmits them to pins 60 about which upright 32 rotates.

Base 34 also includes additional means for bearing the load of upright 32. Each of these means includes a bearing pin 62 extending through a split flanged sleeve 64 and 66. Flanged sleeves 64 extend from tongues 58, and flanged sleeves 66 are welded to the interior surfaces of paired side plates 56. Bearing pin 62 is held in place by threaded nuts about pin 62 both above and below sleeve 64, and reciprocates in sleeve 66. The design of upper saddle 30 described above essentially implements a "pulley". Pins

60 are the center of rotation for this "pulley" and the length of upright 32 defines its radius. The "pulley" diameter may be variable and, in the preferred embodiment, is 150 times the diameter of catenary cable system 16. Although the design handles forces conceptually as does a pulley, there are obvious structural differences. For instance, rotation of upright 32 about pins 60 is constrained to a 7° deviation from the vertical norm. This rotation in upper saddle 30 prevents the introduction of high moments to pylon that are 17 present for the rigid pylons 18 of the system disclosed in the Müller '765 patent.

In the preferred embodiment, lower saddle 200 is designed to accommodate deflection of upright 32, and transmit the vertical and lateral loads applied across a portion of track cable systems 14 to pylon 17, which ultimately transmits the loads to the ground. In this manner, the lower saddle transmits loads developed by vehicle 12, cables 14, the environmental conditions, and deviation of upper saddle 30 (up to 7 degrees each direction). Furthermore, lower saddle 200 provides for a smoother transition from one pylon span to another than previously available, and increases the comfort of the vehicle's passengers by reducing the curvature of track cable systems 14.

Lower saddle 200, represented in detail by Figures 7H-7X, is connected to pylon base 21 beneath pylon upright 32 by way of transverse pylon beam 202, that is mounted transversely to and extends outwardly from either side of base pylon 21. This connection between the lower saddle and pylon base 21 is also illustrated in Figure 6.

U-shaped transverse connecting frame 204 is connected to one end of transverse pylon beam 202 and extends downwardly therefrom to accept and transmit lateral and vertical forces to pylon 17. A second identical transverse connecting frame extends downwardly from the other end of transverse pylon beam 202, providing a second guideway on

the other side of each pylon, but only one such frame 204 will be discussed herein to avoid redundancy. With reference to Figures 7M and 7N, transverse connecting frame 204 includes two vertical suspension beams 206A, 206B connected to transverse pylon beam 202 and extending downwardly therefrom. Suspension beams 206A and 206B are connected by horizontally positioned transverse beam 208 by way of bolted connections 208A. Webs 210 are welded to and extend vertically across transverse support beam 208 for added stability. Bearing plates 212A and 212B are welded to and extend upwardly from transverse support beam 208. The assembly of the horizontal and vertical beams, and other associated hardware thus forms the structural skeleton of transverse connecting frame 204.

An alternate means of connecting a lower saddle to a base pylon beam 201, functionally similar to support beam 208 described above, is illustrated in Figures 7Y and 7Z. At least one pair of connecting plates 203 is attached to the base pylon beam to substantially encase the base pylon beam. Cap plate 207 is connected to the top of connecting plates 203. An upper attachment plate 209 is removably connected to cap plate 207 by a plurality of bolts. The attachment plate is fixed to bearing plates 212A and 212B in a manner similar to the attachment of bearing plates 212A and 212B to the transverse support beam described above. A hanger plate 211 is connected to the bottom of connecting plates 203. The hanger plate is fitted with holes to accept bolts to removably connect additional structure as described below.

A vertical load transmission system is pivotally connected to transverse connecting frame 204, shown in Figure 7M, or alternatively to base pylon beam 201, shown in Figure 7Y, for transmitting vertical loads developed by the vehicle and cables, as well as those loads developed by deflection of the upper saddle, to base pylon 21. A primary requirement of the vertical load transmission system is that vertical loads transmitted by the system

should be well distributed over a portion of the track cable systems to avoid damaging curvilinear deflections in the cables. Accordingly, the vertical load transmission system is preferably an isostatic system of interconnected beams and bars arranged in a hierarchical manner.

More specifically, with reference to Figures 7H and 7L, main beam 214 is a welded plate assembly formed in rectangular cross-section, and is pivotally mounted through its side walls at the center of its longitudinal axis to bearing plates 212A and 212B for rotation in a vertical plane. Main beam 214 is bi-symmetrical and has a variable height defined by a sloped upper surface that peaks at its center directly above its pivotal mounting point and slopes downwardly towards its ends 214E. Lower surface 214L of the main beam is flat and extends horizontally between ends 214E.

Dumbbell-shaped collar 216 is mounted at its disc-like ends 216A and 216B across the sides of the main beam in circular openings 218A and 218B, respectively, as shown in Figures 7N. Shaft 220 is mounted through the longitudinal axis of collar 216 and extends out of ends 216A, 216B through cylindrical openings 220A and 220B therein, respectively. The ends of shaft 220 further extend through openings 222 and associated radial bearings 222A in bearing plates 212A and 212B of the transverse connecting frame, as indicated in Figures 7H and 7N, thereby supporting the main beam for rotation relative to the pylon. Bearings 222A are bronze to reduce friction.

A pair of secondary beams 224 are pivotally mounted at the centers of their respective longitudinal axes to flanges 226 connected to and extending downwardly from locations near the respective ends 214E of the main beam, enabling rotation of the secondary beams relative to the main beam in the same vertical plane that the main beam is rotatable within. Flanges 226 are equipped with openings 232A and 232B, respectively, for mounting shafts 234 therein, as displayed in Figures 7L and 7Q. Shafts 234

pass through discs 236A and 236B mounted within circular openings in respective secondary beams 224, pivotally connecting the secondary beams to flanges 226 near each end of the main beam. Rings 230 retain shafts 234 in place. Like main beam 214, the secondary beams are formed of a welded plate assembly that results in a variable height and a rectangular cross-section.

Four tertiary beams 238 are each pivotally mounted at the center of its longitudinal axis to one of respective secondary beams 224 substantially at a respective end of the secondary beam for rotation in the same vertical plane that the main and secondary beams are rotatable within. Referring to Figures 7S and 7U, tertiary beams 238 carry collars 240 in circular openings 240A. These collars are aligned with two respective sets of complementary discs 242A and 242B, one set of discs 242A, 242B being mounted in circular openings near each end of secondary beams 224. Shafts 244 extend through aligned openings in the respective disc-collar-disc assembly 242A, 240, and 242B to pivotally connect the centers of tertiary beams 238 to the respective ends of secondary beams 224 in a conventional manner. The end portions of the upper and lower faces of secondary beams 224 are cut open somewhat to permit unimpeded movement of tertiary beams 238.

Eight suspension rods 246 are each pivotally mounted at their upper ends to each of respective ends 238E of the tertiary beams for rotation in the vertical plane. Bolts 248 pass through circular openings in each of the suspension rod halves 246A, 246B as well as a circular opening in each of the ends of tertiary beams 238. Cylindrical bearings 250 are positioned about bolt 248 to facilitate relative rotation between the suspension rods and the tertiary beams, and to maintain the spacing between the suspension rod halves. Similar bearings are provided at other interfaces where components rotate relative to one another throughout the lower saddle, in conventional fashion.

The other end of each suspension rod 246 is pivotally connected to a cross-tie 256 by way of flange 258 that extends upwardly from connecting plate 259. Cross-ties 256 function to transmit vertical and lateral vehicle loads to the vertical and lateral load transmission systems, via the engagement of the vehicle wheels with the rails carried by the cross-ties. Connecting plate 259 is bolted via four bolts 259A about the intersection of the cross-tie's longitudinal axis with the axis of an equalizing beam (described below), enabling rotation of cross-ties 256 in the vertical plane relative to the suspension rods. As shown in Figure 7H, bolts 259A actually consist of four sets of bolts of varying lengths to accommodate the differing thicknesses of the equalizing beam across lower saddle 200.

Bolts 252 pass through circular openings at the bottom of suspension rod halves 246A, 246B and openings through flanges 258. The suspension rod halves are connected with welded web 257 that effectively provides an I-section to minimize the risk of instability in the suspension rods. Cylindrical bearings 254 again facilitate relative rotation and maintain the spacing between the suspension rod halves. Rod halves 246A, 246B are enlarged at each of their ends for the pivotal connections to the tertiary beams and the cross-ties, respectively, as shown in Figure 7R. This rotation of the suspension rods at both ends prevents the rods from taking any moment due to lateral forces which, as explained below, are devoted to the equalizing beam.

In another preferred embodiment of the vertical load transmission means of the lower saddle, shown in Figures 7Y and 7Z, bracing rod pairs 247 and shock absorbers 249 are added to alternate tertiary beams 239 and suspension rods 246 to further dampen the impact of vertical loads applied to the track cable systems by dampening the rate at which the suspension rods and the tertiary beams rotate relative to one another. The figures disclose an embodiment wherein the secondary and tertiary beams have hanger plates being

used to connect lower members to higher members. Secondary hanger plate 229 is shown suspended from alternate secondary beam 225 to support alternate tertiary beam 239. Tertiary hanger plates 241 are shown suspended from alternate tertiary beam 239 to support suspension rods 246. Additionally, sets of suspension rods 246 are used rather than single suspension rods 246 at each end of each tertiary beam.

Bracing rod pairs 247 have holes at either end through which bolts 253 pass, thereby pivotally connecting the bracing rods to the rest of the assembly. The end of shock absorber 249 adjacent to the lower end of the suspension rods is also pinned by bolt 253 to pivotally connect the shock absorber to the suspension rods 246, bracing rod pair 247, and alternate cross-ties 255. The alternate cross-ties are substantially similar to cross-ties 256 described below, but have two flanges 258 rather than one, as shown in Figure 7T. The additional flange enables attachment of a shock absorber between the flanges, as seen in Figure 7Z. The opposite end of the shock absorber, i.e. the upper end, is pivotally connected to the adjacent tertiary beam by pinning the shock absorber with bolt 251 through tertiary hanger plates 241 and suspension rods 246. Those skilled in the art will appreciate that bracing rod pairs 247 and shock absorbers 249 could be appended to the first disclosed beam and hanger arrangement.

Cross-ties 256 are different from cross-ties 25 on the pylon spans, which are described below. Cross-ties 256 transmit an upward vertical force to the track cable systems to support them at intermediate points between pylons. Cross-ties 25 transmit an upward vertical force to the track cable systems to support them from the lower saddle 200. Referring to Figure 7X, cross-ties 256 include flat plates 257 to which grooved blocks 257A are welded to serve as a bearing for track cable systems 14. A rail is provided in the form of a second grooved block R that is used to clamp the carrier cables to cross-ties 256. Three

rows of bolts are used to secure grooved blocks R to flat plate 257, as shown in Figure 7W. Interim cable track support sections 257A' are provided between cross-ties 256 and are connected to grooved blocks 257A to form a continuous bearing cradle for track cable systems 14. Grooved blocks R are butterfly shaped, as viewed in Figure 7I, resulting from symmetrical grooves cut into each end. Interim rail sections, not shown, having tongued ends for engaging the grooved ends of the blocks R and are connected thereto to form a continuous rail for supporting the vehicle wheels along the length of the lower saddle.

Lower saddle 200 further includes a lateral load transmission system that contains equalizing beam 260 carried across the cross-ties 256, and lateral support stud 282 carried by transverse connecting frame 204, as shown in Figures 7H and 7V. Thus, equalizing beam 260 spans transversely across the lower saddle's cross-ties 256 to transmit lateral forces to lateral support stud 282. The equalizing beam further serves to stabilize suspension rods 246 in the face of lateral forces. The equalizing beam must be flexible in the vertical direction so that the vertical load transmission system operates effectively as an isostatic system, but also must be reasonably stiff in the lateral direction to transmit lateral forces.

To meet these seemingly contradictory requirements, equalizing beam 260 includes superimposed plates 264, 266, 268, and 270 of different lengths and thicknesses, as displayed in Figures 7V and 7W. Thus, plate 264 is shorter than plate 266, which is shorter than plate 268, and so forth. Also, as particularly shown in Figure 7W, the widths of the plates are greatest at the center of their longitudinal axes and decrease along the lengths of the plates towards each of their ends. This variable width, plus the variable thickness of the super-imposed plate stack, decreases the lateral and vertical moments of inertia of the equalizing beam at its end where bending strength is least needed.

Lateral and vertical loads are transmitted at cross-ties 256 by four bolts 259A that connect the cross-ties to both the vertical and lateral load transmission systems, which operate independently from one another. Thus, as explained above, cross-ties 256 are connected to suspension rods 246 and equalizing beam 260 using bolts 259A. Referring to Figures 7R and 7T, the bolts are fixed in threaded holes 259B in the cross-ties for better transmission of lateral forces than if secured with nuts.

The plates of equalizing beam 260 are joined together near their centers by bolting the plates together along with the center-most cross-ties 256 and suspension rods 246 using bolts 259A, as displayed in the left-most equalizing beam 256 of Figure 7W. The plates of the equalizing beam should otherwise, i.e., outside of the center, be free to move longitudinally. This freedom of movement is realized by using a teflon coating between the plates that provides for maximum vertical flexibility, and by making the bolt holes in the plates that are aligned with the other cross-ties slotted in the longitudinal direction. Bolt sleeves 259B are provided in these slotted bolt holes that are slightly taller than the equalizing beam's plate stack to avoid clamping the plates outside of their centers, as shown in the lower portion of Figure 7R. This allows vertical loads that are transmitted from cross-ties 256 to suspension rods 246 to effectively bypass equalizing beam 260.

Referring to Figure 7N, the lateral load transmission system is further connected to transverse connecting frame 204 and extends downwardly therefrom in the form of lateral support stud 282 to provide for lateral rigidity of the track cable systems and to sustain loads due to environmental conditions. Lateral support housing 276 is connected to and extends downwardly beneath transverse support beam 208. Lateral support stud 282 is encased within housing 276 and extends downwardly through the center thereof.

The lower portion of steel lateral support stud 282 is tapered and extends downwardly through respective aligned grooves 286 formed through clamping plates 262 as well as each of the plates of the equalizing beam, as shown in Figures 7J and 7K. External contact faces of the stud are chromium plated, and are capped with plates 282A made of a hardened steel material, e.g., quenched and tempered steel. Clamping plates 262 are provided with guide blocks 284 for engaging lateral support stud plates 282A and limiting the motion of stud 282 within groove 286 to linear motion along the axis of the equalizing beam. Guide blocks 284 are also made of a hardened steel material in order to sustain the high contact pressure at the lateral support stud plates. A plurality of bolts 286A are positioned in aligned bores through the assembly of clamping plates 262, guide block 284, and equalizing beam 260 about grooves 286 and secured with nuts to clamp the assembly. In this manner, lateral movement of the cross-ties, as well as track cable systems 14 supported at each of the ends thereof, is controlled.

Thus, lateral loads resulting from environmental conditions and deviation (up to 7 degrees either direction) of the upper saddle are applied through cross-ties 256 and equalizing beam 260 to lateral support stud 282. The lateral forces are then transmitted through transverse connecting frame 204 or alternatively to base pylon beam 201, which carries the lateral support stud, to the base pylon.

In the alternate means of connecting a lower saddle to a base pylon beam 201 as describe above in association with Figures 7Y and 7Z, the support stud 282 is also employed. The support stud is fixed to a lower attachment plate 281. The lower attachment plate has holes to align with the holes in hanger plate 211, and by receiving bolts through those holes is removably affixed to the hanger plate and thus to pylon beam 201. As in the first described attachment of the lower saddle, housing 276 is used to provide lateral support to support stud 282.

Referring again to Figures 6 and 7B, upper saddle 30, which is pivotable on pins 60 and includes upright 32, constitutes a yieldable leg deviating from a strict vertical orientation in response to loads on catenary cable system 16 up to 7° either direction. When engaged with coupling 40 and joined by pin 44, cable connectors 42 can rotate relative to coupling 40. The relative rotation of cable connectors 42 and coupling 40 is a response to loads on upper saddle 30 received via catenary cable system 16, and permits deviation of the yieldable leg. As stated above, bottom saddle 200 is designed to accommodate this deviation and, through equalizing beam 260, to: (1) minimize in-plane rigidity; and (2) provide lateral rigidity to sustain environmental loads and forces of pylon 17's deviation from the strict vertical orientation. Through this yieldable leg and bottom saddle described above, the present invention contravenes the art by providing self-adjusting pylons 17, and provides for a smooth transit of vehicle 12 across the system in accordance with regulatory guidelines.

The present invention also contemplates two additional embodiments of the upper saddle and base pylon combination. Figure 7AA shows one alternate embodiment. Therein, tubular upright 33 is supported by tubular base pylon 23 that has an opening in its upper end through which a lower end 35 of the upright extends. The arrangement permits rotation of upper saddle 31 in response to forces applied to the catenary cable system, but limits the rotation by interference of lower end 35 of upright 33 against the inside of tubular base pylon 23. Coupling 41 is substantially similar to coupling 40 disclosed above.

Figures 7AB-7AE illustrate a second alternate embodiment of the upper saddle and base pylon. As shown in Figure 7AB, a base pylon 29 supports an upper saddle composed of a bearing assembly 135 and cable attachment assemblies 140. Bearing assembly 135 is composed of base plate 136 that provides holes for receiving bolts to

connect to base pylon 29 below, and a platform for connection of additional components above. Support member 137 extends vertically from base plate 136 to provide vertical separation between the base plate and catenary cable system 16 supported above. Roller base 138 is supported on top of support member 137 to provide a surface that defines a pattern of travel of cable attachment assemblies 140 above. In the embodiment shown, the pattern of travel defined is a curvlinear pattern approximating the natural curve of catenary cable system 16 under a given load. Figure 7AC shows two crane rails 139 supported on top of roller base 138 to provide wheel-bearing surfaces on which cable attachment assemblies 140 can travel.

The components of cable attachment assemblies 140 are illustrated in Figs. 7AC-7AE. Each cable attachment assembly is supported on crane rails 139 by wheels 141 which are coaxially attached to axle 142. Axle 142 is attached to additional components used to clamp the catenary cable system by axle retainers 143. Axle retainers 143 are bolted to upper channel members 144. Upper channel members 144 are welded to a plate 146 and angles 147 to make up the upper one half of the components used to clamp the catenary cable system. Lower channel members 145 are similarly welded to a plate 146 and angles 147 to form the lower half of the components used to clamp the catenary cable system. The upper and lower halves are bolted together through angles 147 at their ends and through plates 146 near their centers. Teflon linings 148 are fitted around the catenary cable system 16 (cable 16a and 16b) between the two halves so that when the bolts connecting the two halves are tightened, adequate pressure will be exerted on the catenary cables to connect the cables to the cable clamping assemblies. However, the flexibility of the teflon will be relied upon to ensure that the applied pressure will not be so great as to crush or damage the cables.

The cables, rails, and cross-ties of the elevated

cableway system are illustrated in Figures 8A-10C. Figure 8A is an isometric, partially exploded view of hangers 27a-b, cross-ties 25, and carrier rail 14 of the present invention that replace the counterparts in the Müller '765 patent depicted in Figure 2. Figure 8B is a frontal, elevation view of long hanger 27a and cross-tie 25 and shows the relationship of vehicle 12 to one such hanger/cross-tie combination in ghosted lines.

Figures 9A and 9B provide additional views of hanger 27a: Figure 9A in section and partial cutaway along line 9A-9A of Figure 8B; and Figure 9B in section along line 9B-9B of Figure 9A. Figures 10A-C depict rail 100, cables 14c-d, and cross-tie 25. Figure 10A is a partial top view, Figure 10B is a section taken along line 10B-10B of Figure 10A in partial cutaway, and Figure 10C in a front view of rail 100 and bottom guide 102.

Returning to Figure 8A, two alternative embodiments for hanger 27 are shown: long hanger 27a and short hanger 27b. As is shown in Figures 2 and 4, both long and short hangers are used depending on the hanger's distance from pylon 17 and span midpoint 22. In addition to differing lengths, hangers 27a-b differ in that hanger member 91 of hanger 27a is a locked-coil steel cable but in hanger 27b is a rod. Furthermore, short hanger 27b can be used in different lengths using the same construction. Two different lengths are used for short hanger 27b in a single 600m span in the preferred embodiment.

The length of hangers 27a-b is calculated to pre-tension track cable systems 14 as described above, to transmit vertical, pre-tensioning forces to pylon 17, and to ensure clearance between catenary cable clamp 85 and vehicle 12 in high winds, and so the length thereof will depend on the particular application for a given embodiment. The effective length of hangers 27a-b can be adjusted by tightening and loosening nuts 70 and 72 on threaded end 68 of hanger member 91 described below to adjust the pre-tensioning forces. The length of the

threads on threaded end 68 must consequently be sufficient to accommodate the desirable range of tensions. In long hanger 27a, this will nominally be a 0-300mm and in short hanger 27B the length will vary but be at least greater than 50mm.

Hangers 27a-b are suspended from catenary cable system 16 by clamping cables 16a-b in openings 87a-b of suspension clamp 85 shown in Figure 8A. Suspension clamp 85 is pivotably mounted to hanger member 91 at pivot 76. Suspension clamp 85 comprises first guide member 86 bolted to lower guide member 88 as shown in Figures 9A-B. Suspension clamp 85 includes passage 106 through which threaded end 68 of hanger member 91 extends, and block 78 joined to first guide member 86 at pivot 76 such that catenary cable system 16 and suspension clamp 85 may pivot relative to hanger member 91 16° relative to the horizontal normal as shown in Figure 9D. Block 78 includes a bore through which threaded end 68 of hanger member 91 extends. Block 78 rests on a shoulder formed on threaded end 68 and is secured thereagainst by nuts 70 and 72 and washer 74.

Disadvantages to the clamping of cable 16 typically include cable fatigue and the "beam effect", in which cable behaves structurally as a beam. Suspension clamp 85 minimizes these disadvantages by including flared openings 89 in grooves 87a-b as shown in Figures 9A-9B. Flared openings are also employed in equalizing locks 300 discussed below and shown in Figures 11A-D.

Hanger member 91, as shown in Figures 8A-B, of long hanger 27a is jointed and includes upper piece 92, essentially a threaded fork member, and lower piece 94, a steel cable, moving relative to one another at joint 96; hanger member 91 of short hanger 27b is not jointed. The articulation provided by joint 96 and pivot 76 provides flexibility in hanger 27a that will reduce bending moments therein resulting from the loads of power rail 90 and vehicle 12, as well as other forces. Hence, the elimination of joint 96 in hanger 27b, in which bending

moments are of less concern because of the shorter length of hanger member 91, and the inclusion of pivot 76, permit the suspending of hanger 27b from catenary cable system 16.

Referring still to Figures 8A-B, cross-tie 25 is an asymmetric I-beam mounted to the hanger member 91 at pivot 98 at collar 93 of hanger member 91 distal to catenary cable system 16 in both long hanger 27a and short hanger 27b. Pivot 98 is a cylindrical plain bearing providing flexibility and thereby reducing flexural effects in cables 14 and 16. Cross-tie 25 is preferably constructed from cast steel and is I-shaped in cross-section as shown in the isometric view of Figure 8A and in the cross-sectional view of Figure 10B. Openings 95 are either cast or milled in cross-tie 25 to reduce weight and, consequently, the load on catenary cable system 16.

Cables 14a-d of track cable systems 14 are shown in ghosted lines in Figure 8A. Track cable guides 102 comprising bottom guide members 104 and rails 100, joined as shown more fully in Figures 10A-C, are mounted to opposite ends of cross-tie 25 as shown in Figures 8A-B. Guide members 104 may be either formed integrally with or bolted to cross-tie 25 as best shown in Figures 10B and 10C by bolts 114 extending through bores 116 and secured by nut and washer combinations 118. Still referring to Figures 10A-C, rails 100 are then mounted by mating bolts 114 with slot 120 in rail 100 and sliding rails 100 until properly positioned as shown in Figure 10C. When rails 100 are properly positioned relative to guides 104, rails 100 and guides 104 define grooves 122 shown in Figure 10C through which cables 14a-d are strung as shown best in Figures 10A-B and in ghosted lines in Figure 8A.

Rails 100 constructed of aluminum comprise modular segments that typically are sufficiently large to span the entire distance between hangers 27. Although one end of each segment will be relatively fixed in position by the mating of bolts 114 to slot 120 as discussed above, the other end will be softly, rather than rigidly, fixed by the

mating of grooves 122 with cables 14a-d. The movement thereby permitted accommodates thermal expansion of the segments and is therefor desirable. Thus, thermal expansion joints 127 are created between rail segments such as joint 127 between segments 129 shown in Figures 8A, and 10A-B. Joints 127 are preferably angled at 45° relative to the longitudinal axis of rails 100. Rails 100 also include upper surfaces 132 and sides 134 providing a smooth and gliding surface for vehicle 12 in the preferred embodiment as discussed below. Although not shown, the preferred embodiment includes a layer of insulation between rails 100 and cables 14a-d to avoid corrosion and reduce noise.

Other modifications may be employed in the design of rails 100. For instance, holes 124 are milled into individual segments of rails 100 to decrease weight and the heads of bolts 114 need not be of uniform height above cross-tie 25 if it is desirable to incline segments of rails 100. One may furthermore provide some means for heating rails 100 for use in particularly cold climates. These and other such modifications are contemplated by and are within the scope of the invention.

As is known to those in the art, vehicle 12 must be powered as it traverses the system and so provision must be made for power rail 90 as shown in Figures 8B and 10B. Power rail 90 may be mounted to cross-tie 25 as shown in ghosted lines in Figures 8B and 10B. Power rail 90 is grasped by power rail guide 84 bolted to plate 112, which in turn is bolted to the bottom of cross-tie 25. As shown in Figure 8B, a power rail 90 and power rail guide 84 are preferably mounted to each end of cross-tie 25 in this embodiment. Also as is known in the art, power rail 90 must be electrically insulated from all other parts of the system for safety reasons.

The relation of vehicle 12 to the combination of hanger 27, cross-tie 25, and track cable systems 14 is best illustrated in Figure 8B. Carrier wheels 126 mounted on either side of the vehicle above its roof 128 in any

convenient manner rotate in the vertical plane, ride on the upper surface 132 of rails 100, and carry the weight of vehicle 12. Guide wheels 130 rotate in the horizontal plane, contact sides 134 of rails 100, and maintain the lateral position of vehicle 12 vis-a-vis the carrier rails.

Referring now to Figures 11A-D, force equalizing assembly 300, also known as an equalizing lock, is provided for joining catenary cable system 16 to track cable systems 14 between the pylons to equalize the tension between the catenary and track cable systems. Force equalizing assembly 300 substantially prevents relative movement between catenary cable system 16 and track cable systems 14 and distributes forces therebetween through friction on the cables. As such, the force equalizing assembly reduces the maximum deflection of the guideway by impeding relative movement between the cables. Force equalizing assembly 300 includes force equalization plate 302 having three sets of parallel channels formed along the length of the upper surface thereof for accepting catenary cable system 16 in the center two channels 302B and track cable systems 14 in the outer four channels 302A. Thus, the channels are shaped to approximate one-half of the respective cable circumferences except that the ends of the channels are flared outwardly, as illustrated in Figures 11C and 11D.

Clamping plate 304 also has three sets of parallel channels that are formed along the length of the lower surface thereof for accepting catenary cable system 16 in center channels 304B and track cable systems 14 in outer channels 304A. Like the channels of the force equalization plates, the channels of the clamping plates are shaped to approximate one-half of the respective cable circumferences except that the ends of the channels are flared outwardly.

As shown in Figures 11C and 11D, the channeled surfaces of respective force equalization plates 302 and the clamping plates 304 are complementary such that the plates may be assembled about the cables for frictionally locking the cables within the respective channels to

equalize the tension in the catenary and track cable systems. The respective flared ends of the channels in the assembled plates form a frusto-conical cavity in each end of the assembly about each of the cables for reducing wear on the cables by limiting engagement, and therefore bending stresses, with the ends of the plates, a feature lacking in the Müller disclosure. The flared ends are defined by narrower diameter 307 and greater diameter 309 in the opening of the channel through the assembly as best shown in Figure 11D.

Plates 302, 304 are assembled by the insertion of a plurality of bolts 306 through a respective plurality of complementary bores 308 formed in the plates along the sides of the channels. Bolts 306 are high strength bolts to assure the proper tightening force, and are countersunk such that their heads are flush with the upper surface of clamping plates 304. Bolts 306 are retained by respective nuts 310. Flush mounting of the bolts prevents the possibility of the vehicle wheels colliding with one of them.

Clamping plate 304 may have an upper surface that is elevated at its center (not shown) above the two center channels 304B to provide a greater cross-sectional area at the areas of greatest stress. The upper surfaces of plate 304 are further adapted for engagement by the wheels of the cable car.

The force equalizing assembly interfaces with the rail profile to assure a continuous running track. The rail profile must therefore accommodate the profile, i.e., shape of equalizing lock 300. It follows that the 45° expansion gap in the rail cannot be used at the rail's engagement with the force equalizing assembly.

The present invention further contemplates two alternate embodiments of the force equalizing assembly of cable encasing members for connecting and distributing forces between the catenary cable system and the track cable systems. The first alternate force equalizing

assembly, or equalizing lock is illustrated in Figure 11E. Several wheel support rails, 350 and 354, have been removed in the figure in order to clearly illustrate the components below the rails. The assembly of cable encasing members is made up of frame 333 with connections thereto. The connections of the cables are made with spelter sockets 334, as shown in the figure, or by any other cable encasing connection known to those in the art. Frame 333 is made up of base frame 336 which is an elongated plate with U-shaped ends 338. U-shaped ends 338 of the embodiment shown consist of legs 340 and 342 which are of different lengths. Because legs 340 and 342 are of different lengths, clearance is created between the connections to allow for less moment stress development at the base of the "U" for a given tensile load on the cables. That is, if the legs were not of different lengths, the connections would be side by side. In order for the side by side connections not to interfere with one another, legs 340 and 342 would have to be farther apart. Because the legs would be farther apart, a greater moment would be created near their respective connections to the rest of the frame. The different length legs avoid this condition.

A plurality of askew connection plates 344 extend from the vertical faces of base frame 336 at acute angles to the longitudinal axis of the base frame and provide points of connection for track cable systems 14. On both sides of base frame 336, cross members 346 extend from the face of base frame 336 to carry spacer plates 348 and wheel support rails 350. Bracing bars 352 extend perpendicularly from cross members 346 to provide lateral support for the cross members.

Wheel support rails 350 span between cross members 346 and may have spacer plates 348 between the rails and the cross members to give additional elevation to the rails. Wheel support rails 350 typically do not have track cables running underneath them. However, wheel support rails near the transition points where the track cables must pass

underneath and into the support rails must be altered to avoid interfering with the track cables. Thus, transition wheel support rails 354 have channels cut in their lower faces and sides to allow passage of the cable of the track cable systems 14 through the sides of the wheel support rails.

The second alternate force equalizing assembly is illustrated in Figures 11F-L. As illustrated in Figures 11F and 11G, the assembly of cable encasing members is made up of an assembly body 367, a catenary cable system clamp 370, and a pair of track cable system clamps 368.

In a preferred embodiment, assembly body 367 includes of a pair of parallel tubular beams 372 extending the length of the force equalizing assembly that support a plurality of cross extensions that in turn support catenary cable system clamp 370 and track cable system clamps 368.

The cross extensions are made up of tubular columns 374, lateral bracing plates 376, span plates 378a-b, and wing plates 380, as shown in Figures 11G and 11I. A plurality of tubular columns 374 extend vertically from tubular beams 372 to support span plates 378a-b. Lateral bracing plates 376 are provided between consecutive tubular columns 374 to provide support to the columns. Span plates 378a-b are connected between laterally adjacent tubular columns 374 to support catenary cable system clamp 370. Span plates 378a are notched to sit on top of tubular columns 374. Span plates 378b are not notched and are attached to the sides of every other laterally adjacent set of tubular columns 374. Span plates 378a are attached to the tubular columns 374 at either end of the force equalizing assembly. Pairs of span plates 378b are therebetween attached to every other laterally adjacent set of tubular columns 374. Pairs of span plates 378a are attached to every other laterally adjacent set of tubular columns not connected by span plates 378b. Catenary cable system clamp 370 slides in catenary clamp grooves 379 between catenary cable reaction plates 382. Catenary cable

reaction plates 382 are attached between alternating pairs of adjacent span plates 378a. Therefore, each catenary cable system clamp 370 slides in grooves 379 between every other pair of span plates 378a. Catenary cable springs 384 are placed between catenary cable system clamp 370 and reaction plates 382 to yieldably transfer forces between catenary cable system clamp 370 and reaction plates 382.

As illustrated in Figures 11J and 11K, catenary cable reaction plate 382 is made up of inverted T-shaped body 385 and insertable inverted T-shaped wedge 386, each connected to the other by bolts through both of their respective wings. Inverted T-shaped wedge 386 is used to facilitate assembly of the force equalizing assembly. After all of catenary cable system clamps 370 have been put in place about catenary cable system 16 and within assembly body 367, inverted T-shaped wedges 386 are inserted into inverted T-shaped bodies 385 and bolted in place. The function of the wedges is to energize catenary cable springs 384. Those skilled in the art will appreciate that it would not be possible to assemble and adjust catenary cable system clamps 370 about cables 16 if the springs were energized or compressed to workable loads during the assembly process. Therefore, by inserting wedges 386 between catenary cable springs 384 after all of catenary cable system clamps 370 have been put in place in assembly body 367, the force equalizing assembly can be successfully assembled.

Continuing now with the description of assembly body 367, wing plates 380 are attached to tubular beams 372 on both sides of the force equalizing assembly to provide support for track cable system clamps 368. Track cable system clamps 368 slides in track cable clamp grooves 381 between track cable reaction plates 388. Track cable reaction plates 388 are attached between alternating pairs of wing plates 380, as seen in Figure 11H. Therefore, each track cable system clamp 368 slides in grooves 381 between every other pair of wing plates 380. Track cable springs

390 are placed between track cable system clamps 368 and reaction plates 388 to yieldably transfer forces between track cable system clamp 368 and reaction plates 388.

As illustrated in Figures 11J and 11K, track cable reaction plate 388 is made up of a T-shaped body 391 and an insertable T-shaped wedge 392, each connected to the other by bolts through both of their respective wings. In a manner essentially identical to inverted T-shaped wedge 386 of the catenary cable clamp described above, T-shaped wedge 392 of the track cable clamp is used to facilitate assembly of the force equalizing assembly.

As illustrated in Figures 11G and 11I, each catenary cable system clamp 370 is formed by a clamp sliding body 394 and a catenary clamping plate 396. Clamp sliding body 394 and clamping plate 396 have complementary channels in which cables of catenary cable system 16 are secured by bolting body 394 and plate 396 together. Figure 11I also shows a cross-section of catenary reaction plate 382 as formed by inverted T-shaped wedge 386 inserted into inverted T-shaped body 385. Energized catenary cable springs 384 between wedge 386 and catenary cable system clamp 370 are also illustrated.

Similarly, as illustrated in Figures 11G and 11H, track cable system clamps 368 are formed by a clamp sliding body 398 and a clamping plate 399. Clamp sliding body 398 and a track clamping plate 399 have complementary channels in which cables of track cable systems 14 are secured by bolting body 398 and plate 399 together. Similar to Figure 11I above, Figure 11H shows arrangements of track reaction plates 388 and track springs 390.

With a large cable clamping mechanism such as the force equalizing assembly of the present embodiment, it is problematic that unless the cable slips near the end of a clamp closest to the application of load, the clamping pressure near the farthest end of a clamp cannot be fully utilized. That is, if the clamping pressure near the end of a clamp closest to an applied force is great enough to

hold a cable without slipping, the clamping pressure at the end of the clamp farthest from the applied force is not utilized. In the preferred embodiment described here, this limitation is overcome by using a plurality of clamps that intermittently grasp the cables, but are allowed to deflect relative to one another and a fixed body, specifically assembly body 367. The means for accomplishing controlled relative movement among clamps is to place springs between the clamps and the cross extensions of the assembly body. By using springs with different spring constants, different amounts of resistance can be generated between selected clamps. By placing springs with lower spring constants closest to the end of the cable to which load is applied, these clamps will be allowed to deflect more under a given load. Since the clamps on the closest end are allowed to deflect more, more load is passed on to the farther clamps. By this mechanism the clamping pressures required by the respective clamps are equalized.

The arrangement described above is employed both with catenary cable springs 384 and catenary cable system clamps 370, and with track cable springs 390 and track cable system clamps 368. The numbers and spring constants of the various springs would be a matter left to the discretion of the designer for a given set of loadings.

A basic problem with clamping cables is that large stresses tend to be generated near the point where a cable exits a clamp. Furthermore, the stress is accentuated if the cable is subjected to lateral loadings that additionally strain the cable at the exit point due to bending induced by the lateral loading. In a preferred embodiment of the present invention, as illustrated in Figures 11F and 11L, an extension member guide 400 is added to the force equalizing assembly to address this problem.

Extension member guide 400 is bolted to assembly body 367 at the entry and exit ends of catenary cable system 16. Extension member guide 400 guides catenary cable system 16 into catenary cable system clamp 370 to reduce the wear on

catenary cable system 16 due to combined tension and bending of catenary cable system 16 at the point of entry into catenary cable system clamp 370.

In a preferred embodiment, extension member guide 400 is formed by an upper guide 402 and a lower guide 404, the combined profile of the guides fitting around catenary cable system 16. Upper guide 402 and lower guide 404 are formed with complementary holes so that they may be clamped together by a plurality of bolts.

The holes formed for catenary cable system 16 through extension member guide 400 are slightly larger than the cables of catenary cable system 16. The purpose of the enlarged holes is to provide for limited clamping of catenary cable system 16 without generating the unwanted stress at the outer ends of the clamp. Extension member guide 400 essentially guides catenary cable system 16 more squarely into catenary cable assembly clamp 370. Thereby, the more extreme stresses developed by combined tension and bending of the cable are not experienced. In a preferred embodiment of extension member guide 400, linings 406 are fitted between guide 400 and cable system 16 to provide limited clamping friction therebetween without inducing wear therebetween.

It is therefore evident that the invention claimed herein includes many alternative and equally satisfactory embodiments without departing from the spirit or essential characteristics thereof. Those of ordinary skill in the art having the benefits of the teachings herein will quickly realize beneficial variations and modifications on the preferred embodiments disclosed herein such as that discussed in the above paragraph, all of which are intended to be within the scope of the invention. For instance, all cables in the preferred embodiment are locked-coil steel cables because of their high corrosion resistance, density, and moduli of elasticity as well as their lower sensitivity to bearing pressure. However, other types of cables may also be suitable in some embodiments. The preferred

embodiments disclosed above must consequently be considered illustrative and not limiting of the scope of the invention.

WHAT IS CLAIMED IS:

1. An elevated cableway system for providing a track over which a vehicle traverses, comprising:

a catenary cable system;

a pair of track cable systems hung from said catenary cable system for supporting wheels of the vehicle traversing said elevated cableway system;

a plurality of hangers for suspending said track cable systems from said catenary cable system; and

a plurality of pylons for supporting said catenary cable system and said pair of track cable systems, at least one of said support pylons comprising:

a base pylon,

a lower saddle supported by the base pylon for supporting said pair of track cable systems, the lower saddle including linkage means pivotally mounted to the base pylon to transmit loads applied by the vehicle traversing said track cable systems applied across a portion of said track cable systems to said one pylon, and

an upper saddle supported by the base pylon for supporting said catenary cable system and providing for deflection of said catenary cable system in response to forces applied to said cableway system comprising:

a bearing assembly, and

a cable attachment assembly that secures a cable of the catenary cable system thereto for supporting the catenary cable system yieldably in relation to the bearing assembly.

2. The elevated cableway system of claim 1 wherein the lower saddle of said one pylon comprises:

This Sheet Has Been Replaced

a transverse pylon beam mounted to a base pylon;

means pivotably connected to said transverse pylon beam for transmitting the vertical components of the loads to said transverse pylon beam;

a plurality of cross-ties carried by said vertical load transmission means; and

means partially supported by said cross-ties for transmitting the lateral components of the loads to said transverse pylon beam.

3. The elevated cableway system of claim 1 wherein said one hanger comprises:

a hanger member having upper and lower pieces and a joint that connects the upper and lower pieces for relative movement therebetween, said at least one hanger being suspended from said catenary cable system by a first end of the hanger member;

a hanger cross-tie pivotably mounted to the hanger member at a second and thereof distal to said catenary cable for supporting said track cable systems; and

a track cable guide affixed to the hanger cross-tie.

4. The elevated cableway system of claim 1, further comprising a force equalizing assembly for joining said catenary cable system to said pair of track cable systems at points between support pylons in an elevated cableway system to equalize the tension among said catenary cable system and said track cable systems, comprising a system of cable encasing members for frictionally engaging cables of said catenary cable system and said track cable systems about their respective circumferences and for transmitting the forces applied by said catenary cable system and said track cable systems among said catenary cable system cables and said track cable systems cable.

5. A lower saddle for use in an elevated cableway

This Sheet Has Been Replaced

system for supporting a pair of track cable systems, wherein said lower saddle transmits the loads applied by a vehicle traversing the track cable systems applied across a portion of the track cable systems to the pylon, said lower saddle comprising:

a transverse pylon beam mounted to a base pylon;

means pivotably connected to said transverse pylon beam for transmitting the vertical components of the loads to said transverse pylon beam;

a plurality of cross-ties carried by said vertical load transmission means; and

means partially supported by said cross-ties for transmitting the lateral components of the loads to said transverse pylon beam.

6. The lower saddle of claim 5 wherein said vertical load transmission means is a load dampening system that operates independently of said lateral load transmission means.

7. The lower saddle of claim 6 wherein said vertical load transmission means comprises:

a main beam pivotally mounted at the center of its longitudinal axis to the transverse pylon beam for rotation in a first vertical plane;

a pair of secondary beams each pivotally mounted at the center of its longitudinal axis to the main beam substantially at a respective end of the main beam for rotation in the first vertical plane;

four tertiary beams each pivotally mounted at the center of its longitudinal axis to one of the respective secondary beams substantially at a respective end of the one secondary beam for rotation in the first vertical plane; and

eight suspension rods each pivotally mounted at one of its ends to one of the respective tertiary beams

This Sheet Has Been Replaced

substantially at a respective end of the one tertiary beam for rotation in the first vertical plane, the other end of each suspension rod being pivotally connected to a cross-tie at the center of the cross-tie's longitudinal axis for rotation of the cross-tie in the first vertical plane, the cross-tie supporting the track cable systems.

8. The lower saddle of claim 5 wherein said lateral load transmission means comprises:

an equalizing beam carried transversely across said cross-ties; and

a lateral support stud carried by said transverse pylon beam for engagement with the equalizing beam.

9. The lower saddle of claim 8 wherein the equalizing beam includes superimposed plates of different lengths.

10. The lower saddle of claim 8 wherein the width of the equalizing beam varies across its length.

11. A lower saddle for use in an elevated cableway system for supporting a pair of track cable systems, wherein said lower saddle transmits the loads applied by a vehicle traversing the track cable systems applied across a portion of the track cable systems to the pylon, said lower saddle comprising:

a transverse pylon beam mounted to a base pylon;

a transverse connecting frame connected adjacent one end of said transverse pylon beam and extending downwardly therefrom for transmitting the loads to the pylon;

means pivotally connected to said transverse connecting frame for transmitting the vertical components of the loads to said transverse

This Sheet Has Been Replaced

connecting frame;

a plurality of cross-ties carried by said vertical load transmission means; and

means partially supported by said cross-ties for transmitting the lateral components of the loads to said transverse connecting frame.

12. The lower saddle of claim 11 wherein said lateral load transmission means comprises:

an equalizing beam carried transversely across said cross-ties; and

a lateral support stud carried by said transverse connecting frame for engagement with the equalizing beam.

13. The lower saddle of claim 11 wherein said vertical load transmission means comprises:

a main beam pivotally mounted at the center of its longitudinal axis to the transverse connecting frame for rotation in a first vertical plane;

a pair of secondary beams each pivotally mounted at the center of its longitudinal axis to the main beam substantially at a respective end of the main beam for rotation in the first vertical plane;

four tertiary beams each pivotally mounted at the center of its longitudinal axis to one of the respective secondary beams substantially at a respective end of the one secondary beam for rotation in the first vertical plane; and

eight suspension rods each pivotally mounted at one of its ends to one of the respective tertiary beams substantially at a respective end of the one tertiary beam for rotation in the first vertical plane, the other end of each suspension rod being pivotally connected to a cross-tie at the center of the cross-tie's longitudinal axis for rotation

This Sheet Has Been Replaced

of the cross-tie in the first vertical plane, the cross-tie supporting the track cable systems.

14. A lower saddle for supporting a pair of track cable systems in an elevated cableway system and providing for deflection of the track cable systems in response to forces applied by a vehicle traversing the track cable systems, comprising:

a transverse pylon beam mounted transversely to a base pylon,

a main beam pivotally mounted at the center of its longitudinal axis to the transverse pylon beam for rotation in a first vertical plane,

a pair of secondary beams each pivotally mounted at the center of its longitudinal axis to the main beam substantially at a respective end of the main beam for rotation in the first vertical plane,

four tertiary beams each pivotally mounted at the center of its longitudinal axis to one of the respective secondary beams substantially at a respective end of the one secondary beam for rotation in the first vertical plane,

eight suspension rods each pivotally mounted at one of its ends to one of the respective tertiary beams substantially at a respective end of the one tertiary beam for rotation in the first vertical plane, the other end of each suspension rod being pivotally connected to a suspension cross-tie at the center of the suspension cross-tie's longitudinal axis for rotation of the suspension cross-tie in the first vertical plane, the suspension cross-tie supporting the track cable systems,

an equalizing beam of varying width across its length including superimposed plates of different lengths spanning the cross-ties to further

This Sheet Has Been Replaced

equalize the forces applied by the vehicle across said track cable systems, and

a lateral support stud carried by the transverse connecting frame for engagement with the equalizing beam.

15. A system for transmitting vertical loads applied to a pair of track cable systems in an elevated cableway system to a pylon, comprising:

a main beam pivotally mounted at the center of its longitudinal axis to the pylon for rotation in a first vertical plane;

a pair of secondary beams each pivotally mounted at the center of its longitudinal axis to the main beam substantially at a respective end of the main beam for rotation in the first vertical plane;

four tertiary beams each pivotally mounted at the center of its longitudinal axis to one of the respective secondary beams substantially at a respective end of the one secondary beam for rotation in the first vertical plane; and

eight sets of suspension rods each set pivotally mounted at one of its ends to one of the respective tertiary beams substantially at a respective end of the one tertiary beam for rotation in the first vertical plane, the other end of each suspension rod being pivotally connected to a cross-tie at the center of the cross-tie's longitudinal axis for rotation of the cross-tie in a second vertical plane that is perpendicular to the first vertical plane, the cross-tie vertically supporting the track cable systems.

16. The vertical load transmission system of claim 15 further comprising a system for transmitting lateral loads

This Sheet Has Been Replaced

applied to said track cable systems, the lateral load transmission system including:

an equalizing beam carried transversely across said cross-ties for laterally supporting said track cable systems; and

a lateral support stud connected to said pylon for engagement with the equalizing beam.

17. The vertical load transmission system of claim 15 further comprising four shock absorbers each pivotally mounted at one of its ends to one of the respective tertiary beams substantially at a respective end of the one tertiary beam near the mounted end of one of the eight sets of suspension rods, the other end of each shock absorber being pivotally connected to a cross-tie near the other end of the suspension rod set that is connected substantially at the other end of the tertiary beam to which the one end of the shock absorber is connected, the shock absorbers thus further dampening the impact of vertical loads applied to the track cable systems by dampening the rate at which the suspension rods and the tertiary beams rotate relative to one another.

18. The vertical load transmission system of claim 15 further comprising four bracing rods each pivotally mounted at one of its ends to a cross-tie and near a lower end of a first suspension rod, another end of each bracing rod pivotally connected to a cross-tie at a lower end of and near a second suspension rod that is connected to an opposite end of a tertiary beam from which the first suspension rod hangs.

19. An upper saddle supported by a base pylon for supporting a catenary cable system in an elevated cableway system and providing for deflection of the catenary cable system in response to forces applied by a vehicle traversing a pair of track cable systems supported from the

This Sheet Has Been Replaced

catenary cable system, comprising:

a bearing assembly; and

a cable attachment assembly that secures a cable of the catenary cable system thereto for supporting the catenary cable system yieldably in relation to said bearing assembly.

20. The upper saddle of claim 19 wherein said bearing assembly comprises an assembly for pivotably mounting an upright to the base pylon.

21. The upper saddle of claim 20 wherein said cable attachment assembly comprises:

an upright pivotably mounted to said bearing assembly; and

a coupling mounted to and capping the upright for supporting the catenary cable system.

22. The upper saddle of claim 21, further comprising means for bearing the dynamic loads developed in the upright as it deflects in response to forces applied by a vehicle traversing the track cable systems.

23. The upper saddle of claim 21, wherein said assembly for pivotably mounting the upright includes means for bearing the dynamic loads developed in the upright as it deflects in response to forces applied by a vehicle traversing the track cable systems.

24. The upper saddle of claim 21, wherein said coupling comprises:

a coupling base;

at least two support members affixed to the coupling base and extending substantially perpendicular from the coupling base, the members being spaced apart;

a cable connector socketed on one end to engage the

This Sheet Has Been Replaced

support members and on a second end to receive the cable; and

means for joining the cable connector to the support members such that the cable connector can pivot relative to said coupling.

25. The upper saddle of claim 21, wherein the upper saddle is supported by a tubular base pylon having an opening in an upper end through which a lower end of the upright extends, and the mounting assembly permits rotation of the upright about a pivot point within the base pylon in response to forces applied by a vehicle traversing the track cable systems.

26. The upper saddle of claim 19 wherein said bearing assembly comprises:

a base plate for connection to an upper portion of the base pylon, said base plate providing a platform supporting additional components of the bearing assembly;

a support member extending vertically from said base plate for providing vertical separation between said base plate and the supported catenary cable system;

a roller base supported atop said vertical support member for providing a base surface, the top of that defines a pattern of travel of said cable attachment assembly that secures the catenary cable system; and

at least one wheel-bearing member supported atop said roller base for providing a surface on which said cable attachment assembly travels.

27. The upper saddle of claim 26 wherein said cable attachment assembly comprises a plurality of cable clamping wheel assemblies for clamping onto the catenary cable system and enabling deflection of the catenary cable system

This Sheet Has Been Replaced

relative to said at least one wheel-bearing member.

28. The upper saddle of claim 27, wherein said support member extending vertically has an arcuate upper surface for supporting an arcuate roller base.

29. The upper saddle of claim 28, wherein said roller base is a plate bent to a curvature complementary with the curvature of said support member to fit atop said support member.

30. The upper saddle of claim 29, wherein said at least one wheel-bearing member is a crane rail bent about its major axes to a curvature complementary with the curvature of said arcuate roller base to fit atop said arcuate roller base.

31. The upper saddle of claim 27, wherein each of said cable clamping wheel assemblies for enabling deflection of the catenary cable system relative to at least one wheel-bearing surface comprises:

at least one wheel;

an axle attached to said at least one wheel;

a cable clamping member disposed adjacent to said axle;

at least one axle retainer attached to said cable clamping member and capturing said axle to secure said axle in rotatable relation with said cable clamping member; and

at least one teflon lining that is fitted within said cable clamping member and around the catenary cable system that upon completion of said cable clamping member provides adequate friction between said teflon lining and the catenary cable system to connect said cable clamping member to the catenary cable system, without crushing the catenary cable system.

This Sheet Has Been Replaced

32. The upper saddle of claim 31, wherein each cable clamping member is constructed of channels, angles, and plates.

33. The upper saddle of claim 19 wherein a lower saddle for dampening loads applied to the catenary cable system by a vehicle traversing the catenary cable system is connected to the base pylon.

34. A force equalizing assembly for joining a catenary cable system to a pair of track cable systems at points between support pylons in an elevated cableway system to equalize the tension between the catenary cable system and the track cable systems, comprising a system of cable encasing members for frictionally engaging cables of the catenary cable system and the track cable systems about their respective circumferences and for distributing the forces applied by the catenary cable system and the track cable systems among the catenary cable system cables and the track cable systems cables.

35. The force equalizing assembly of claim 34 wherein said system of cable encasing members comprises:

a force equalization plate having at least three parallel channels formed along the length of a surface thereof for accepting the catenary cable system in the center channels and said track cable systems in the outer channels, the channels being shaped to approximate half of the respective cable circumferences except that the ends of the channels are flared outwardly,

a clamping plate having at least three parallel channels formed along the length of a first surface thereof for accepting the catenary cable system in the center channels and said track cable systems in the outer channels, the channels being shaped to approximate the other half of the

This Sheet Has Been Replaced

respective cable circumferences except that the ends of the channels are flared outwardly, the channeled clamping plate having a second surface opposite the first surface that is adapted for engagement by the wheels of the cable car, the second surface being elevated opposite the center channels to accommodate stresses imposed by the clamped cable assembly, and

the channeled surfaces of the force equalization plate and the clamping plate being complementary such that the plates are adaptable for bolting together through respective bores therein for frictionally locking the catenary and track cable systems within the respective channels to equalize the forces in said respective catenary and track cable systems, the respective flared ends of the channels in the assembled plates forming a frusto-conical cavity in each end of the assembly about each of said respective catenary and track cable systems for reducing wear on the cables by the ends of the plates.

36. The force equalizing assembly of claim 35 wherein said system of cable encasing members includes a plurality of bolts passing through a respective plurality of complementary bores in the force equalizing plate and the clamping plate and clamping the plates together.

37. The force equalizing assembly of claim 35 wherein the force equalization plate and the clamping plate each have six parallel channels formed along the length of the respective surfaces thereof for frictionally locking two catenary cables in the center two respective channels and four track cables in the outer four respective channels when the plates are assembled.

38. The force equalizing assembly of claim 37 wherein

This Sheet Has Been Replaced

the surface of the clamping plate opposite the channeled surface is elevated opposite the center two channels to accommodate stresses imposed by the clamped cable assembly.

39. The force equalizing assembly of claim 34 wherein said assembly of cable encasing members includes:

a plurality of spelter sockets for connecting cables to a pin connection; and

a frame with cable connections for accepting pin connections of spelter sockets from angles acute to the longitudinal axis of the frame and from cables connecting parallel with the longitudinal axis of the frame for therethrough distributing forces among a catenary cable system and a pair of track cable systems.

40. The force equalizing assembly of claim 34 wherein said assembly of cable encasing members includes a frame with cable connections for cables connecting from angles acute to the longitudinal axis of the frame and for cables connecting parallel with the longitudinal axis of the frame for therethrough distributing forces among a catenary cable system and a pair of track cable systems.

41. The force equalizing assembly of claim 40 wherein said frame comprises:

a base frame including an elongated plate with U-shaped ends for connecting the catenary cable system cables to each end,

a plurality of askew connection plates attached to vertical faces of the elongated plate of said base frame at acute angles to the longitudinal axis of said base frame for connecting the track cable systems cables, and

a plurality of cross members extending from the faces of the elongated plate of said base frame on opposite faces of the elongated plate for

This Sheet Has Been Replaced

carrying wheel support rails at outer ends of said cross members.

42. The force equalizing assembly of claim 41 wherein said frame further comprises a plurality of bracing bars extending perpendicularly from said cross members and between said cross members for laterally supporting said cross members.

43. The force equalizing assembly of claim 41 wherein the respective U-shaped ends of said base frame include legs upon which the cable connection are made up, the legs having different lengths to provide clearance between the connections of each of the cables of the catenary cable system to the legs.

44. The force equalizing assembly of claim 41 wherein each leg of the U-shaped ends of said base frame has a hole to accept a pin of a connection that is connected to a cable of the catenary cable system.

45. The force equalizing assembly of claim 43 wherein each leg of the U-shaped ends of said base frame has a hole to accept a pin of a connection that is connected to a cable of the catenary cable system.

46. The force equalizing assembly of claim 41 wherein each askew connection plate has a hole to accept a pin of a connection that is connected to a cable of the track cables systems.

47. The force equalizing assembly of claim 41 wherein each said cross member supports a spacer plate at its end between said cross member and said wheel support rails to elevate said wheel support rails.

48. The force equalizing assembly of claim 41 wherein

This Sheet Has Been Replaced

said wheel support rails are connected atop said frame for supporting a wheel of a vehicle traversing the elevated cableway system.

49. The force equalizing assembly of claim 48 wherein said wheel support rails have channels cut in their bottom sides to allow passage of the cables of the track cable systems through the sides of the wheel support rails.

50. The force equalizing assembly of claim 34 wherein said system of cable encasing members comprises:

an assembly body,

a catenary cable system clamp that grasps the catenary cable system and is yieldably attached to the assembly body to dampen forces distributed between the catenary cable system clamp and the assembly body, and

a pair of track cable system clamps that grasp the pairs of track cable systems and are yieldably attached to the assembly body to dampen forces distributed between the track cable system clamps and the assembly body, the top surface of said pair of track cable system clamps being adapted for engagement by the wheels of a vehicle traversing the elevated cableway system.

51. The force equalizing assembly of claim 50 wherein the assembly body comprises:

a longitudinal frame,

a plurality of cross extensions each attached to the longitudinal frame for supporting a catenary cable clamp near its middle and track cable clamps near both ends of the cross extension,

a plurality of springs disposed between the cross extensions and the track cable system clamps for providing yieldable, dampened engagement therebetween, and

This Sheet Has Been Replaced

a plurality of springs disposed between the cross extensions and the catenary cable system clamps for providing yieldable dampened engagement therebetween.

52. The force equalizing assembly of claim 51 wherein the longitudinal frame comprises a pair of parallel beams extending the length of the force equalizing assembly for supporting the cross extensions.

53. The force equalizing assembly of claim 52 wherein the cross extensions comprise:

columns extending vertically from the longitudinal frame,

lateral bracing plates attached between consecutive columns to provide lateral support to the columns,

span plates attached near the top of the columns for slidably supporting the catenary cable system clamps,

catenary cable reaction plates attached between alternating pairs of adjacent span plates for providing bearing surfaces for the springs disposed between the reaction plate and an adjacent catenary cable system clamp,

wing plates attached to the longitudinal beams for slidably supporting the track cable system clamps on each side of the longitudinal frame, and

track cable reaction plates attached between alternating pairs of adjacent wing plates for providing bearing surfaces for springs disposed between each reaction plate and an adjacent track cable system clamp.

54. The force equalizing assembly of claim 50 wherein the catenary cable system clamp comprises:

a clamp sliding body disposed between sections of the

This Sheet Has Been Replaced

assembly body with a channel for accepting the catenary cable system, and

a clamping plate with a channel complementary with the parallel channel of the catenary clamp sliding body for bolting to the catenary clamp sliding body and securing the catenary cable system therebetween.

55. The force equalizing assembly of claim 50 wherein each of the pair of track cable system clamp comprises:

a clamp sliding body disposed between sections of the assembly body with at least two parallel channels for accepting the track cable system, and

a clamping plate with at least two parallel channels complementary with the parallel channels of the track clamp sliding body for bolting to the track clamp sliding body and securing the track cable system therebetween.

56. The force equalizing assembly of claim 51 wherein the spring constants of the springs disposed between the cross extensions and the track cable system clamps are varied to more equally distribute the force applied to the track cables to each of the track cable system clamps.

57. The force equalizing assembly of claim 51 wherein the spring constants of the springs disposed between the cross extensions and the catenary cable system are varied to more equally distribute the force applied to the catenary cables to each of the catenary cable system clamps.

58. The force equalizing assembly of claim 53 wherein the catenary cable reaction plates comprise:

a T-shaped body with a cavity through its central leg for accepting a T-shaped wedge and holes in its

This Sheet Has Been Replaced

face for accepting springs, and

a T-shaped wedge with a double beveled leading edge for insertion into the T-shaped body and therewith compressing and energizing the springs disposed between the catenary cable system clamp and the catenary cable reaction plates.

59. The force equalizing assembly of claim 53 wherein the track cable reaction plates comprise:

a T-shaped body with a cavity through its central leg for accepting a T-shaped wedge and holes in its face for accepting springs, and

a T-shaped wedge with a double beveled leading edge for insertion into the T-shaped body and therewith compressing and energizing the springs disposed between the catenary cable system clamp and the catenary cable reaction plates.

60. The force equalizing assembly of claim 50 wherein the assembly body further comprises an extension member guide that slidably guides the catenary cable system into the catenary cable system clamp to lessen wear on the catenary cable system due to bending of the catenary cable system at the connection to the catenary cable system clamp.

61. The force equalizing assembly of claim 60 wherein said extension member guide comprises:

a pair of opposing members extending outwardly from each longitudinal end of the assembly body for fitting around the catenary cable system, and

a plurality of linings fitting between the pair of opposing members and the catenary cable system and providing for clamping friction therebetween while reducing wear therebetween.

This Sheet Has Been Replaced

20000279G-1

PCT WORLD INTELLECTUAL PROPERTY ORGANIZATION
International Bureau

INTERNATIONAL APPLICATION PUBLISHED UNDER THE PATENT COOPERATION TREATY (PCT)

(51) International Patent Classification 6 : E01B 25/16 — A1

(11) International Publication Number: WO 99/29960

(43) International Publication Date: 17 June 1999 (17.06.99)

(21) International Application Number: PCT/US97/22323

(22) International Filing Date: 5 December 1997 (05.12.97)

(71) Applicant *(for all designated States except US)*: AEROBUS INTERNATIONAL, INC. [US/US]; Suite 1750, 811 Rusk, Houston, TX 77002–2814 (US).

(72) Inventors; and

(75) Inventors/Applicants *(for US only)*: LAMOREAUX, Ben [US/US]; 389 N. 100 W., Cedar City, UT 84720 (US). WETTSTEIN, Hans [CH/CH]; Clarastrasse 12, CH–5442 Fislisbach (CH). AASHEIM, Per [CH/CH]; Avenue de Corsier 1, P.O. Box 59, CH–1800 Vevey (CH). PUGIN, Andre, O. [CH/CH]; Petit Centenaire 2, CH–1802 Corseaux (CH).

(74) Agents: VADEN, Frank, S., III et al.; Vaden, Eickenroht & Thompson, L.L.P., Suite 1100, One Riverway, Houston, TX 77056–1982 (US).

(81) Designated States: AL, AM, AT, AU, AZ, BA, BB, BG, BR, BY, CA, CH, CN, CU, CZ, DE, DK, EE, ES, FI, GB, GE, GH, HU, ID, IL, IS, JP, KE, KG, KP, KR, KZ, LC, LK, LR, LS, LT, LU, LV, MD, MG, MK, MN, MW, MX, NO, NZ, PL, PT, RO, RU, SD, SE, SG, SI, SK, SL, TJ, TM, TR, TT, UA, UG, US, UZ, VN, YU, ZW, ARIPO patent (GH, KE, LS, MW, SD, SZ, UG, ZW), Eurasian patent (AM, AZ, BY, KG, KZ, MD, RU, TJ, TM), European patent (AT, BE, CH, DE, DK, ES, FI, FR, GB, GR, IE, IT, LU, MC, NL, PT, SE), OAPI patent (BF, BJ, CF, CG, CI, CM, GA, GN, ML, MR, NE, SN, TD, TG).

Published

With international search report.

REPLACED SHEETS SG

- ☐ Description : paged ..... to paged .....
- ☒ Claim(s) : paged 37 to paged 55
- ☐ Drawing(s) : paged ..... to paged .....
- ☐ Abstract : paged ..... to paged .....

(54) Title: ELEVATED CABLEWAY SYSTEM

(57) Abstract

An improved cableway system for providing a track over which a vehicle traverses is disclosed. The improved system includes a catenary cable system (16) and a pair of track cable systems (14). The track cable systems (14) are hung from the catenary cable system (16) and support tracks over which a vehicle (12) traverses. A plurality of hangers (27) is employed to suspend the track cable systems (14) from the catenary cable system (16). A plurality of pylons (17) support the catenary and track cable systems (14, 16). A pylon (17) includes a base pylon (21), a lower saddle (200), and an upper saddle (30). The lower saddle (200) is pivotally mounted to the base pylon (21) and supports the track cable systems (14). Preferred embodiments of the lower saddle (200) include apparatuses that dampen the application of loads to the pylon (17) by the vehicle (12) traversing the system. The upper saddle (30) is supported by the base pylon (21) and supports the catenary cable system (16) while providing for deflection of the catenary cable system (16) in response to forces applied to the cableway system. A preferred embodiment of the cableway system includes a force equalizing assembly (300) for joining the catenary cable system (16) to the track cable system (14) at points between support pylons (17) to equalize the tension in the cables among the various cables.

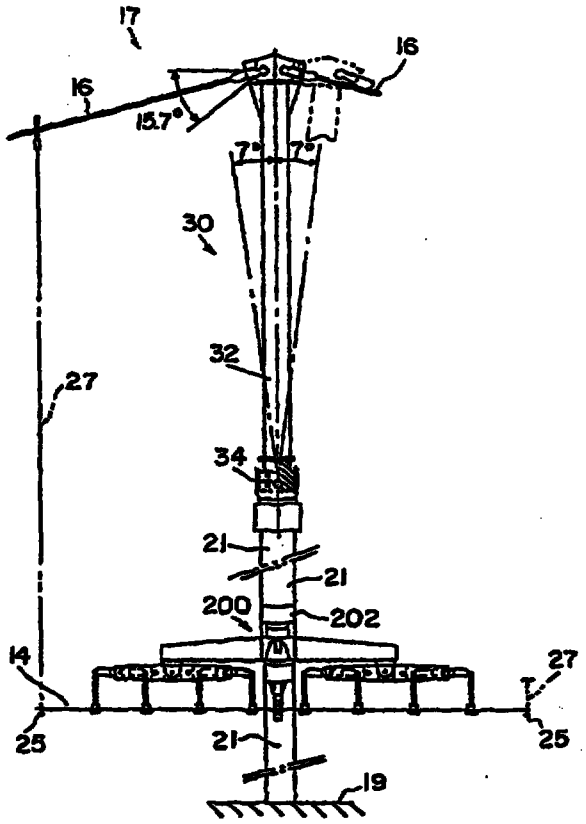



WHAT IS CLAIMED IS:

1. An elevated cableway system for providing a track over which a vehicle traverses, comprising:

a catenary cable system 16;

a pair of track cable systems 14 hung from said catenary cable system 16 for supporting wheels of the vehicle 12 traversing said elevated cableway system;

a plurality of hangers 27 for suspending said track cable systems 14 from said catenary cable system 16; and

a plurality of pylons 17 for supporting said catenary cable system 16and said pair of track cable systems 14, at least one of said support pylons 17 comprising:

a base pylon 21,

a lower saddle 200 supported by the base pylon 21 for supporting said pair of track cable systems 14, the lower saddle 200 including linkage means pivotally mounted to the base pylon 21 to transmit loads applied by the vehicle 12 traversing said track cable systems 14 applied across a portion of said track cable systems to said one pylon 17, and

an upper saddle 30 supported by the base pylon 21 for supporting said catenary cable system 16 and providing for deflection of said catenary cable system 16 in response to forces applied to said cableway system; and

wherein the lower saddle 200 of said one pylon 17 comprises:

a transverse pylon beam 202 mounted to a base pylon 21,23,29;

means 204 pivotably connected to said transverse pylon beam for transmitting the vertical components of the loads to said transverse pylon beam 202;

a plurality of cross-ties 255,256 carried by said vertical load transmission means; and

AMENDED SHEET
IPEA/EP

means 260 partially supported by said cross-ties 255,256 for transmitting the lateral components of the loads to said transverse pylon beam 202.

3. The elevated cableway system of claim 1 wherein said one hanger 27 comprises:

- a hanger member 91 having upper 92 and lower 94 pieces and a joint 96 that connects the upper 92 and lower 94 pieces for relative movement therebetween, said at least one hanger 27 being suspended from said catenary cable system 16 by a first end of the hanger member 91;

a hanger cross-tie 25 pivotably mounted to the hanger member 91 at a second end thereof, distal to said catenary cable 16 for supporting said track cable systems 14; and

a track cable guide 102 affixed to the hanger cross-tie 25.

4. The elevated cableway system of claim 1, further comprising a force equalizing assembly 300 for joining said catenary cable system 16 to said pair of track cable systems 14 at points between support pylons 17 in an elevated cableway system to equalize the tension among said catenary cable system 16 and said track cable systems 14, comprising a system of cable encasing members 304,302 for frictionally engaging cables of said catenary cable system 16 and said track cable systems 14 about their respective circumferences and for transmitting the forces applied by said catenary cable system 16 and said track cable systems 14 among said catenary cable system 16 cables and said track cable systems 14 cable.

5. A lower saddle 200 for use in an elevated cableway system for supporting a pair of track cable systems 14, wherein said lower saddle 200 transmits vertical components and horizontal components of loads to a pylon, said loads applied by a vehicle traversing the track cable systems, said lower saddle 200 comprising:

a transverse pylon beam 202 mounted to a base pylon 21;

AMENDED SHEET
IPEA/EP



a first load transmitting member 214,224,246,225,238,239 pivotably connected to said transverse pylon beam 202 for transmitting the vertical components of the loads to said transverse pylon beam 202;

a plurality of cross-ties 255,256 carried by said first load transmitting member; and

a second load transmitting member 260 partially supported by said cross-ties 255,256 for transmitting the lateral components of the loads to said transverse pylon beam 202.

6. The lower saddle 200 of claim 5 wherein said first load transmitting member 214,224,246,225,238,239 is a load dampening system that operates independently of said second load transmitting member.

7. The lower saddle 200 of claim 6 wherein said first load transmitting member comprises:

a main beam 214 pivotally mounted at the center of its longitudinal axis to the transverse pylon beam 202 for rotation in a first vertical plane;

a pair of secondary beams 224,225 each pivotally mounted at the center of its longitudinal axis to the main beam 214 substantially at a respective end of the main beam 214 for rotation in the first vertical plane;

four tertiary beams 238,239 each pivotally mounted at the center of its longitudinal axis to one of the secondary beams 224,225 substantially at a respective end of the one secondary beam 224,225 for rotation in the first vertical plane; and

eight suspension rods 246 each pivotally mounted at one of its ends to one of the tertiary beams 238,239 substantially at a respective end of the one tertiary beam 238,239 for rotation in the first vertical plane, the other end of each suspension rod 246 being pivotally connected to a cross-tie 255,256 at the center of the cross-tie's longitudinal axis for rotation of the cross-tie

* C L M S *



255,256 in the first vertical plane, the cross-tie 255,256 supporting the track cable systems 14.

8. The lower saddle 200 of claim 5 wherein said second load transmitting member comprises:

an equalizing beam 260 carried transversely across said cross-ties 255,256; and

a lateral support stud 282 carried by said transverse pylon beam 202 for engagement with the equalizing beam 260.

9. The lower saddle 200 of claim 8 wherein the equalizing beam 260 includes superimposed plates 264,266,268,270 of different lengths.

10. The lower saddle 200 of claim 8 wherein the width of the equalizing beam 260 varies across its length.

11. A lower saddle 200 for use in an elevated cableway system for supporting a pair of track cable systems 14, wherein said lower saddle 200 transmits the loads applied by a vehicle 12 traversing the track cable systems 14 applied across a portion of the track cable systems 14 to the pylon 17, said lower saddle 200 comprising:

a transverse pylon beam 202 mounted to a base pylon 21;

a transverse connecting frame 204 connected adjacent one end of said transverse pylon beam 202 and extending downwardly therefrom for transmitting the loads to the pylon 17;

means 214,224,246,225,238,239 pivotally connected to said transverse connecting frame 204 for transmitting the vertical components of the loads to said transverse connecting frame 204;

a plurality of cross-ties 255,256 carried by said vertical load transmission means; and

means 260 partially supported by said cross-ties 255,256 for transmitting the lateral components of the loads to said transverse connecting frame 204.

AMENDED SHEET
IPEA/EP



12. The lower saddle 200 of claim 11 wherein said lateral load transmission means comprises:

an equalizing beam 260 carried transversely across said cross-ties 255,256; and

a lateral support stud 282 carried by said transverse connecting frame 204 for engagement with the equalizing beam 260.

13. The lower saddle 200 of claim 11 wherein said vertical load transmission means comprises:

a main beam 214 pivotally mounted at the center of its longitudinal axis to the transverse connecting frame 204 for rotation in a first vertical plane;

a pair of secondary beams 224,225 each pivotally mounted at the center of its longitudinal axis to the main beam 214 substantially at a respective end of the main beam 214 for rotation in the first vertical plane;

four tertiary beams 238, 239 each pivotally mounted at the center of its longitudinal axis to one of the respective secondary beams 224,225 substantially at a respective end of the one secondary beam 224,225 for rotation in the first vertical plane; and

eight suspension rods 246 each pivotally mounted at one of its ends to one of the respective tertiary beams 238,239 substantially at a respective end of the one tertiary beam 238,239 for rotation in the first vertical plane, the other end of each suspension rod 246 being pivotally connected to a cross-tie 255,256 at the center of the cross-tie's longitudinal axis for rotation of the cross-tie 255,256 in the first vertical plane, the cross-tie 255,256 supporting the track cable systems 14.

14. A lower saddle 200 for supporting a pair of track cable systems 14 in an elevated cableway system and providing for deflection of the track cable systems 14 in response to forces applied by a vehicle 12 traversing the track cable systems 14, comprising:

a transverse pylon beam 202 mounted transversely to a base pylon 21,

AMENDED SHEET
IPEA/EP



a main beam 214 pivotally mounted at the center of its longitudinal axis to the transverse pylon beam 202 for rotation in a first vertical plane,

a pair of secondary beams 224,225each pivotally mounted at the center of its longitudinal axis to the main beam 214 substantially at a respective end of the main beam 214 for rotation in the first vertical plane,

four tertiary beams 238,239 each pivotally mounted at the center of its longitudinal axis to one of the respective secondary beams 224,225 substantially at a respective end of the one secondary beam 224,225 for rotation in the first vertical plane,

eight suspension rods 246 each pivotally mounted at one of its ends to one of the respective tertiary beams 238,239 substantially at a respective end of the one tertiary beam 238,239 for rotation in the first vertical plane, the other end of each suspension rod 246 being pivotally connected to a suspension cross-tie 255,256 at the center of the suspension cross-tie's longitudinal axis for rotation of the suspension cross-tie 255,256 in the first vertical plane, the suspension cross-tie 255,256 supporting the track cable systems 14,

an equalizing beam 260 of varying width across its length including superimposed plates 264,266,268,270 of different lengths spanning the cross-ties 255,256 to further equalize the forces applied by the vehicle 12 across said track cable systems 14, and

a lateral support stud 282 carried by the transverse connecting frame 204 for engagement with the equalizing beam 260.

15. A system for transmitting vertical loads applied to a pair of track cable systems 14 in an elevated cableway system to a pylon 17, comprising:

a main beam 24 pivotally mounted at the center of its longitudinal axis to the pylon 21 for rotation in a first vertical plane;

AMENDED SHEET
IPEA/EP

a pair of secondary beams 224,225 each pivotally mounted at the center of its longitudinal axis to the main beam 214 substantially at a respective end of the main beam 214 for rotation in the first vertical plane;

four tertiary beams 238,239 each pivotally mounted at the center of its longitudinal axis to one of the respective secondary beams 224,225 substantially at a respective end of the one secondary beam 224,225 for rotation in the first vertical plane; and

eight sets of suspension rods 246 each set pivotally mounted at one of its ends to one of the respective tertiary beams 238,239 substantially at a respective end of the one tertiary beam 238,239 for rotation in the first vertical plane, the other end of each suspension rod 246 being pivotally connected to a cross-tie 255,256 at the center of the cross-tie's longitudinal axis for rotation of the cross-tie 255,256 in a second vertical plane that is perpendicular to the first vertical plane, the cross-tie 255,256 vertically supporting the track cable systems 14.

16. The vertical load transmission system of claim 15 further comprising a system for transmitting lateral loads applied to said track cable systems 14, the lateral load transmission system including:

an equalizing beam 260 carried transversely across said cross-ties 255,256 for laterally supporting said track cable systems 14; and

a lateral support stud 282 connected to said pylon 17 for engagement with the equalizing beam 260.

17. The vertical load transmission system of claim 15 further comprising four shock absorbers 249 each pivotally mounted at one of its ends to one of the respective tertiary beams 239 substantially at a respective end of the one tertiary beam 239 near the mounted end of one of the eight sets of suspension rods 246, the other end of each shock absorber 249 being pivotally connected to a cross-tie 255 near the other end of the suspension rod 246 set that is connected substantially at the other end of the tertiary beam

AMENDED SHEET
IPEA/EP



239 to which the one end of the shock absorber 249 is connected, the shock absorbers 249 thus further dampening the impact of vertical loads applied to the track cable systems 14 by dampening the rate at which the suspension rods 246 and the tertiary beams 239 rotate relative to one another.

18. The vertical load transmission system of claim 15 further comprising four bracing rods 247 each pivotally mounted at one of its ends to a cross-tie 255,256 and near a lower end of a first suspension rod 246, another end of each bracing rod 247 pivotally connected to a cross-tie 255,256 at a lower end of and near a second suspension rod 246 that is connected to an opposite end of a tertiary beam 239 from which the first suspension rod 246 hangs.

19. An upper saddle 30,31 supported by a base pylon 21 for supporting a catenary cable system 16 in an elevated cableway system and providing for deflection of the catenary cable system 16 in response to forces applied by a vehicle 12 traversing a pair of track cable systems 14 supported from the catenary cable system 16, comprising:

a bearing assembly 35,60,135 affixed to the base pylon 21; and

a cable attachment assembly 40,41,42,140 affixed to said bearing assembly to pivot about the base pylon 21, said cable attachment assembly joins a cable of the catenary cable system 16 thereto for supporting the catenary cable system 16 yieldably in relation to said bearing assembly 35,60,135.

20. The upper saddle 30,31 of claim 19 wherein said bearing assembly 35,60,135 comprises an assembly for pivotably attaching an upright 32,33 to the base pylon 21.

21. The upper saddle 30,31 of claim 20 wherein said cable attachment assembly 40,41,42,140 comprises:

an upright 32,33 pivotably mounted to said bearing assembly 35,60,135; and

AMENDED SHEET
IPEA/EP

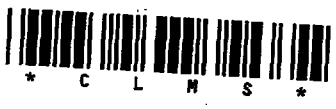

a coupling 40,41 mounted to and capping the upright 32,33 for supporting the catenary cable system 16.

22. The upper saddle 30,31 of claim 21, further comprising a bearing member 66 for bearing the dynamic loads developed in the upright 32,33 as it deflects in response to forces applied by a vehicle 12 traversing the track cable systems 14.

23. The upper saddle 30,31 of claim 21, wherein said upright 32,33 includes a bearing member 66 for bearing the dynamic loads developed in the upright 32,33 as it deflects in response to forces applied by a vehicle 12 traversing the track cable systems 14.

24. The upper saddle 30,31 of claim 21, wherein said coupling 40,41 comprises:

a coupling base 46;

at least two support members 48 affixed to the coupling base 46 and extending substantially perpendicular from the coupling base 46, the members 48 being spaced apart;

a cable connector 42 socketed on one end to engage the support members 48 and pivot relative to said coupling and having a second end adapted to receive the cable.

25. The upper saddle 31 of claim 21, wherein the upper saddle 31 is supported by a tubular base pylon 23 having an opening in an upper end through which a lower end of the upright 33 extends, and the mounting assembly permits rotation of the upright 33 about a pivot point within the base pylon 23 in response to forces applied by a vehicle 12 traversing the track cable systems 14.

26. The upper saddle 30,31 of claim 19 wherein said bearing assembly 135 comprises:



a base plate 136 for connection to an upper portion of the base pylon 29, said base plate 136 providing a platform supporting additional components of the bearing assembly 135;

a support member 137 extending vertically from said base plate 136 for providing vertical separation between said base plate 136 and the supported catenary cable system 16;

a roller base 138 supported atop said vertical support member 137 for providing a base surface, the top of that defines a pattern of travel of said cable attachment assembly 140 that secures the catenary cable system 16; and

at least one wheel-bearing member 139 supported atop said roller base 138 for providing a surface on which said cable attachment assembly 140 travels.

27. The upper saddle 30,31 of claim 26 wherein said cable attachment assembly 140 comprises a plurality of cable clamping wheel assemblies 141,144,145 for clamping onto the catenary cable system 16 and enabling deflection of the catenary cable system 16 relative to said at least one wheel-bearing member 139.

28. The upper saddle 30,31 of claim 27, wherein said support member 137 extending vertically has an arcuate upper surface for supporting an arcuate roller base 138.

29. The upper saddle 30,31 of claim 28, wherein said roller base 138 is a plate bent to a curvature complementary with the curvature of said support member 137 to fit atop said support member 137.

30. The upper saddle 30,31 of claim 29, wherein said at least one wheel-bearing member 139 is a crane rail bent about its major axes to a curvature complementary with the curvature of said arcuate roller base 138 to fit atop said arcuate roller base 138.

AMENDED SHEET



31. The upper saddle 30,31 of claim 27, wherein each of said cable clamping wheel assemblies 141,144,145 for enabling deflection of the catenary cable system 16 relative to at least one wheel-bearing surface comprises:

at least one wheel 141;

an axle 142 attached to said at least one wheel 141;

a cable clamping member 144,145 disposed adjacent to said axle 142;

at least one axle retainer 143 attached to said cable clamping member 144,145 and capturing said axle 142 to secure said axle 142 in rotatable relation with said cable clamping member 54; and

at least one teflon lining 148 that is fitted within said cable clamping member 144,145 and around the catenary cable system 16 that upon completion of said cable clamping member 144,145 provides adequate friction between said teflon lining 148 and the catenary cable system 16 to connect said cable clamping member 144,145 to the catenary cable system 16, without crushing the catenary cable system 16.

32. The upper saddle 30,31 of claim 31, wherein each cable clamping member 144,145 is constructed of channels, angles, and plates.

33. The upper saddle 30,31 of claim 19 wherein a lower saddle 200 for dampening loads applied to the catenary cable system 16 by a vehicle 12 traversing the catenary cable system 16 is connected to the base pylon 21.

34. (Deleted)

35. A force equalizing assembly 300 for joining a catenary cable system 16 to a pair of track cable systems 14 at points between support pylons 17 in an elevated cableway system to equalize the tension between the catenary cable systems 16 and the track cable system 14, comprising:



a system of cable encasing members 302,304,333,334,367,368,370 for frictionally engaging cable of the catenary cable system 16 and the track cable systems 14 about their respective circumferences and for distributing the forces applied by the catenary cable system 16 and the track cable systems 14 among the catenary cable system cables 16 and the track cable systems cables 14;

wherein said system of cable encasing members 302,304 comprises:

a force equalization plate 302 having at least three parallel channels 302A,302B formed lengthwise on a surface thereof for accepting the catenary cable system 16 in a center channel 302B and the track cable systems 14 in outer channels 302A, said channels 302A,302B being shaped to approximate half of the respective cable circumferences except that the ends of said channels 304A,304B are flared outwardly;

a clamping plate 304 having at least three parallel channels 304A,304B formed lengthwise on a first surface thereof for accepting the catenary cable system 16 in a center channel 304B and the track cable systems 14 in outer channels 304A, said channels 304A,304B being shaped to approximate the other half of the respective cable circumferences except that the ends of said channels 304A,304B are flared outwardly, said channeled clamping plate 304 having a second surface opposite said first surface that is adapted for engagement by wheels of a cable car, said second surface being elevated opposite said center channels 304B to accommodate stresses imposed by said cable systems 14,16; and

wherein said channeled surface of said force equalization plate 302 and said first surface of said clamping plate 304 are complementary such that the plates are adaptable for bolting together through respective bores 308 therein for frictionally locking the catenary 16 and track 14 cable systems within the respective channels 302A,302B,304A,304B to equalize the forces in the respective catenary 16 and track 14 cable systems, the respective flared ends of said channels 302A,302B,304A,304B in the assembled plates 302,304 forming a frusto-conical cavity in each end of the assembly about each of the respective catenary 16 and

AMENDED SHEET
IPEA/EP

track 14 cable systems for reducing wear on the cables 14,16 by the ends of said plates 302,304.

36. The force equalizing assembly 300 of claim 35 wherein said system of cable encasing members 302,304 further comprises a plurality of bolts 306 passing through a respective plurality of complementary bores 308 in said force equalizing plate 302 and said clamping plate 304 and clamping said plates 302,304 together.

37. The force equalizing assembly 300 of claim 35 wherein said force equalization plate 302 and said clamping plate 304 each have six parallel channels 302A,302B,304A,304B formed lengthwise on respective surfaces thereof for frictionally locking two catenary cables 16 in a center two respective channels 302B,304B and four track cables 14 in an outer four respective channels 302A,304A when said plates 302,304 are assembled.

38. The force equalizing assembly 300 of claim 37 wherein said second surface of said clamping plate 304 is elevated opposite the center two channels 304B to accommodate stresses imposed by said cable systems 14,16.

39. A force equalizing assembly 300 for joining a catenary cable system 16 to a pair of track cable systems 14 at points between support pylons 17 in an elevated cableway system to equalize the tension between the catenary cable systems 16 and the track cable system 14, comprising:

a system of cable encasing members 302,304,333,334,367,368,370 for frictionally engaging cable of the catenary cable system 16 and the track cable systems 14 about their respective circumferences and for distributing the forces applied by the catenary cable system 16 and the track cable systems 14 among the catenary cable system cables 16 and the track cable systems cables 14;

wherein said assembly of cable encasing members includes:

a plurality of spelter sockets 334 for connecting cables to a pin connection; and



a frame 333 with cable connections for accepting pin connections of spelter sockets 334 from angles acute to the longitudinal axis of the frame 333 and from cables connecting parallel with the longitudinal axis of the frame 333 for therethrough distributing forces among a catenary cable system 16 and a pair of track cable systems 14.

40. A force equalizing assembly 300 for joining a catenary cable system 16 to a pair of track cable systems 14 at points between support pylons 17 in an elevated cableway system to equalize the tension between the catenary cable systems 16 and the track cable system 14, comprising:

a system of cable encasing members 302,304,333,334,367,368,370 for frictionally engaging cable of the catenary cable system 16 and the track cable systems 14 about their respective circumferences and for distributing the forces applied by the catenary cable system 16 and the track cable systems 14 among the catenary cable system cables 16 and the track cable systems cables 14;

wherein said assembly of cable encasing members includes a frame 333 with cable connections for cables connecting from angles acute to the longitudinal axis of the frame 333 and for cables connecting parallel with the longitudinal axis of the frame 333 for therethrough distributing forces among a catenary cable system 16 and a pair of track cable systems 14.

41. The force equalizing assembly 300 of claim 40 wherein said frame comprises:

a base frame 336 including an elongated plate with U-shaped ends 338 for connecting the catenary cable system cables 16 to each end,

a plurality of askew connection plates 344 attached to vertical faces of the elongated plate of said base frame 336 at acute angles to the longitudinal axis of said base frame 336 for connecting the track cable systems cables 14, and

AMENDED SHEET
IPEA/EP



a plurality of cross members 346 extending from the faces of the elongated plate of said base frame 336 on opposite faces of the elongated plate for carrying wheel support rails 350,354 at outer ends of said cross members 346.

42. The force equalizing assembly 300 of claim 41 wherein said frame 333 further comprises a plurality of bracing bars 352 extending perpendicularly from said cross members 346 and between said cross members 346 for laterally supporting said cross members 346.

43. The force equalizing assembly 300 of claim 41 wherein the respective U-shaped ends 338 of said base frame 336 include legs 340,342 upon which the cable connection are made up, the legs 340,342 having different lengths to provide clearance between the connections of each of the cables of the catenary cable system 16 to the legs 340,342.

44. The force equalizing assembly 300 of claim 41 wherein each leg 340,342 of the U-shaped ends 338 of said base frame 336 has a hole to accept a pin of a connection that is connected to a cable of the catenary cable system 16.

45. The force equalizing assembly 300 of claim 43 wherein each leg 340,342 of the U-shaped ends 338 of said base frame 336 has a hole to accept a pin of a connection that is connected to a cable of the catenary cable system 16.

46. The force equalizing assembly 300 of claim 41 wherein each askew connection plate 344 has a hole to accept a pin of a connection that is connected to a cable of the track cables systems 14.

AMENDED SHEET
IPEA/EP

* C L M S *



47. The force equalizing assembly 300 of claim 41 wherein each said cross member 346 supports a spacer plate 348 at its end between said cross member 346 and said wheel support rails 350,354 to elevate said wheel support rails 350,354.

48. The force equalizing assembly 300 of claim 41 wherein said wheel support rails 350,354 are connected atop said frame 333 for supporting a wheel of a vehicle 12 traversing the elevated cableway system.

49. The force equalizing assembly 300 of claim 48 wherein said wheel support rails 350,354 have channels cut in their bottom sides to allow passage of the cables of the track cable systems 14 through the sides of the wheel support rails 350,354.

50. The force equalizing assembly 300 of claim 34 wherein said system of cable encasing members comprises:

an assembly body 367,

a catenary cable system clamp 370 that grasps the catenary cable system 16 and is yieldably attached to the assembly body 367 to dampen forces distributed between the catenary cable system clamp 370 and the assembly body 367, and

a pair of track cable system clamps 368 that grasp the pairs of track cable systems 14 and are yieldably attached to the assembly body 367 to dampen forces distributed between the track cable system clamps 368 and the assembly body 367, the top surface of said pair of track cable system clamps 368 being adapted for engagement by the wheels of a vehicle 12 traversing the elevated cableway system.

51. The force equalizing assembly 300 of claim 50 wherein the assembly body 367 comprises:

a longitudinal frame 372,

AMENDED SHEET
IPEA/EP

a plurality of cross extensions 374,376,378,380 each attached to the longitudinal frame 372 for supporting a catenary cable clamp 370 near its middle and track cable clamps 368 near both ends of the cross extension 374,376,378,380,

a plurality of springs 390 disposed between the cross extensions 374,376,378,380 and the track cable system clamps 368 for providing yieldable, dampened engagement therebetween, and

a plurality of springs 384 disposed between the cross extensions 374,376,378,380 and the catenary cable system clamps 370 for providing yieldable dampened engagement therebetween.

52. The force equalizing assembly 300 of claim 51 wherein the longitudinal frame 372 comprises a pair of parallel beams 372 extending the length of the force equalizing assembly 300 for supporting the cross extensions 374,376,378,380.

53. The force equalizing assembly 300 of claim 52 wherein the cross extensions 374,376,378,380 comprise:

columns 374 extending vertically from the longitudinal frame 372,

lateral bracing plates 376 attached between consecutive columns 374 to provide lateral support to the columns 374,

span plates 378A,378B attached near the top of the columns 374 for slidably supporting the catenary cable system clamps 370,

catenary cable reaction plates 382 attached between alternating pairs of adjacent span plates 378A,378B for providing bearing surfaces for the springs 384 disposed between the reaction plate 382 and an adjacent catenary cable system clamp 370,

wing plates 380 attached to the longitudinal frame 372 for slidably supporting the track cable system clamps 368 on each side of the longitudinal frame 372, and

AMENDED SHEET
IPEA/EP

* C L M S *

track cable reaction plates 388 attached between alternating pairs of adjacent wing plates 380 for providing bearing surfaces for springs 390 disposed between each reaction plate 388 and an adjacent track cable system clamp 368.

54. The force equalizing assembly 300 of claim 50 wherein the catenary cable system clamp 370 comprises:

a clamp sliding body 394 disposed between sections of the assembly body 367 with a channel for accepting the catenary cable system 16, and

a clamping plate 396 with a channel complementary with the parallel channel of the catenary clamp sliding body 394 for bolting to the catenary clamp sliding body 394 and securing the catenary cable system 16 therebetween.

55. The force equalizing assembly 300 of claim 50 wherein each of the pair of track cable system clamp 368 comprises:

a clamp sliding body 394 disposed between sections of the assembly body 367 with at least two parallel channels for accepting the track cable system 14, and

a clamping plate 396 with at least two parallel channels complementary with the parallel channels of the track clamp sliding body 394 for bolting to the track clamp sliding body 394 and securing the track cable system 14 therebetween.

56. The force equalizing assembly 300 of claim 51 wherein the spring constants of the springs 390 disposed between the cross extensions 374,376,378,380 and the track cable system clamps 368 are varied to more equally distribute the force applied to the track cables 14 to each of the track cable system clamps 360.

57. The force equalizing assembly 300 of claim 51 wherein the spring constants of the springs 384 disposed between the cross extensions 374,376,378,380 and the

AMENDED SHEET
IPEA/EP

* C L M S *

catenary cable system clamps 370 are varied to more equally distribute the force applied to the catenary cables to each of the catenary cable system clamps 370.

58. The force equalizing assembly 300 of claim 53 wherein the catenary cable reaction plates 382 comprise:

a T-shaped body 385 with a cavity through its central leg for accepting a T-shaped wedge 386 and holes in its face for accepting springs 384, and

a T-shaped wedge 386 with a double beveled leading edge for insertion into the T-shaped body 385 and therewith compressing and energizing the springs 384 disposed between the catenary cable system clamp 370 and the catenary cable reaction plates 382.

59. The force equalizing assembly 300 of claim 53 wherein the track cable reaction plates 388 comprise:

a T-shaped body 391 with a cavity through its central leg for accepting a T-shaped wedge 392 and holes in its face for accepting springs 390, and

a T-shaped wedge 392 with a double beveled leading edge for insertion into the T-shaped body 391 and therewith compressing and energizing the springs 390 disposed between the catenary cable system clamp 370 and the catenary cable reaction plates 382.

60. The force equalizing assembly 300 of claim 50 wherein the assembly body 367 further comprises an extension member guide 400 that slidably guides the catenary cable system 16 into the catenary cable system clamp 370 to lessen wear on the catenary cable system 16 due to bending of the catenary cable system 16 at the connection to the catenary cable system clamp 370.

61. The force equalizing assembly 300 of claim 60 wherein said extension member guide 400 comprises:

AMENDED SHEET
IPEA/EP

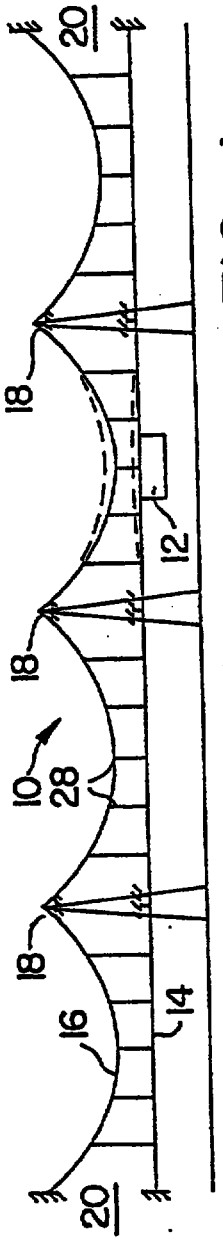

FIG. 1
PRIOR ART

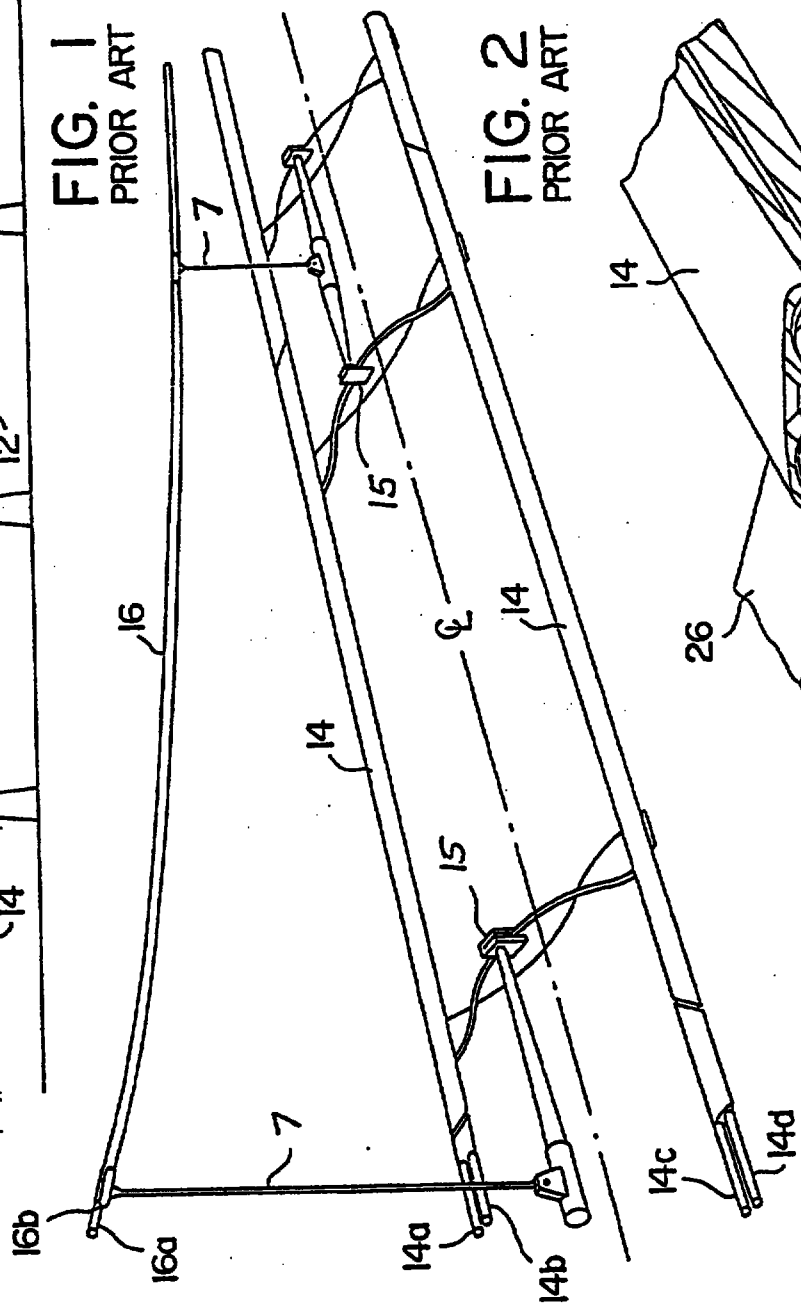

FIG. 2
PRIOR ART

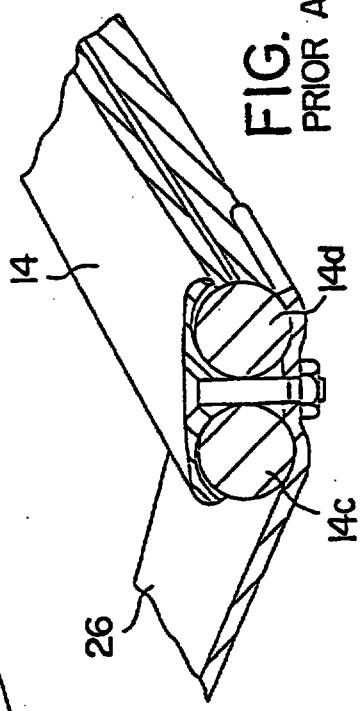

FIG. 3
PRIOR ART

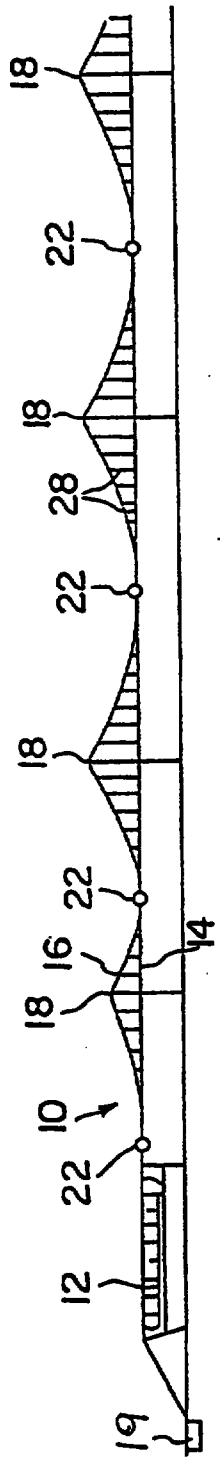

FIG. 4
PRIOR ART

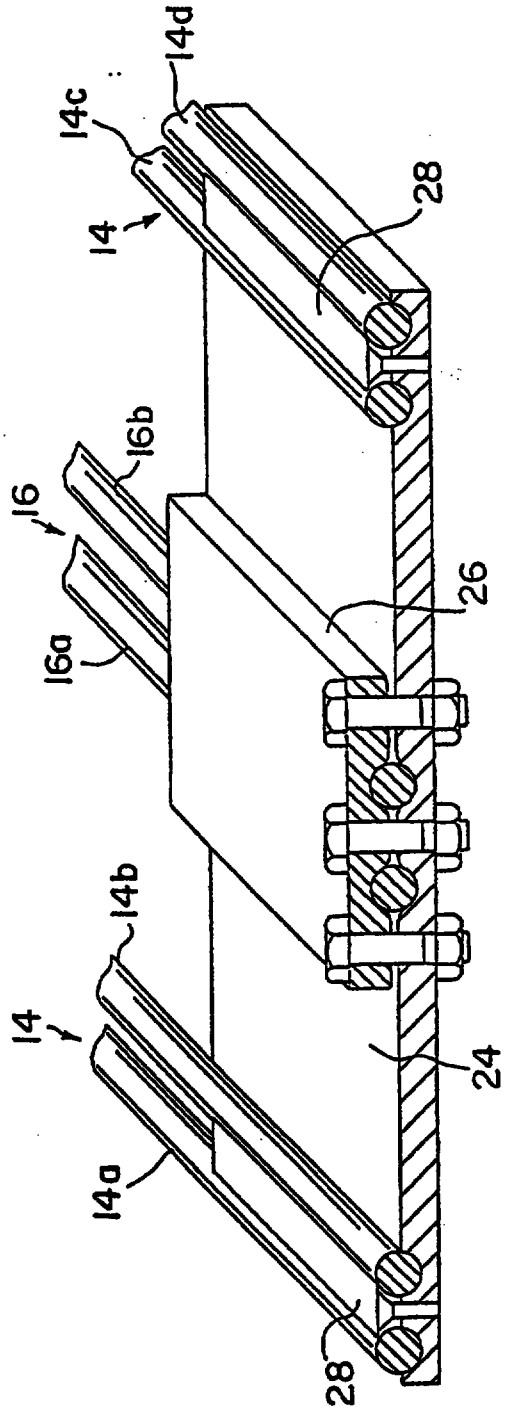

FIG. 5
PRIOR ART

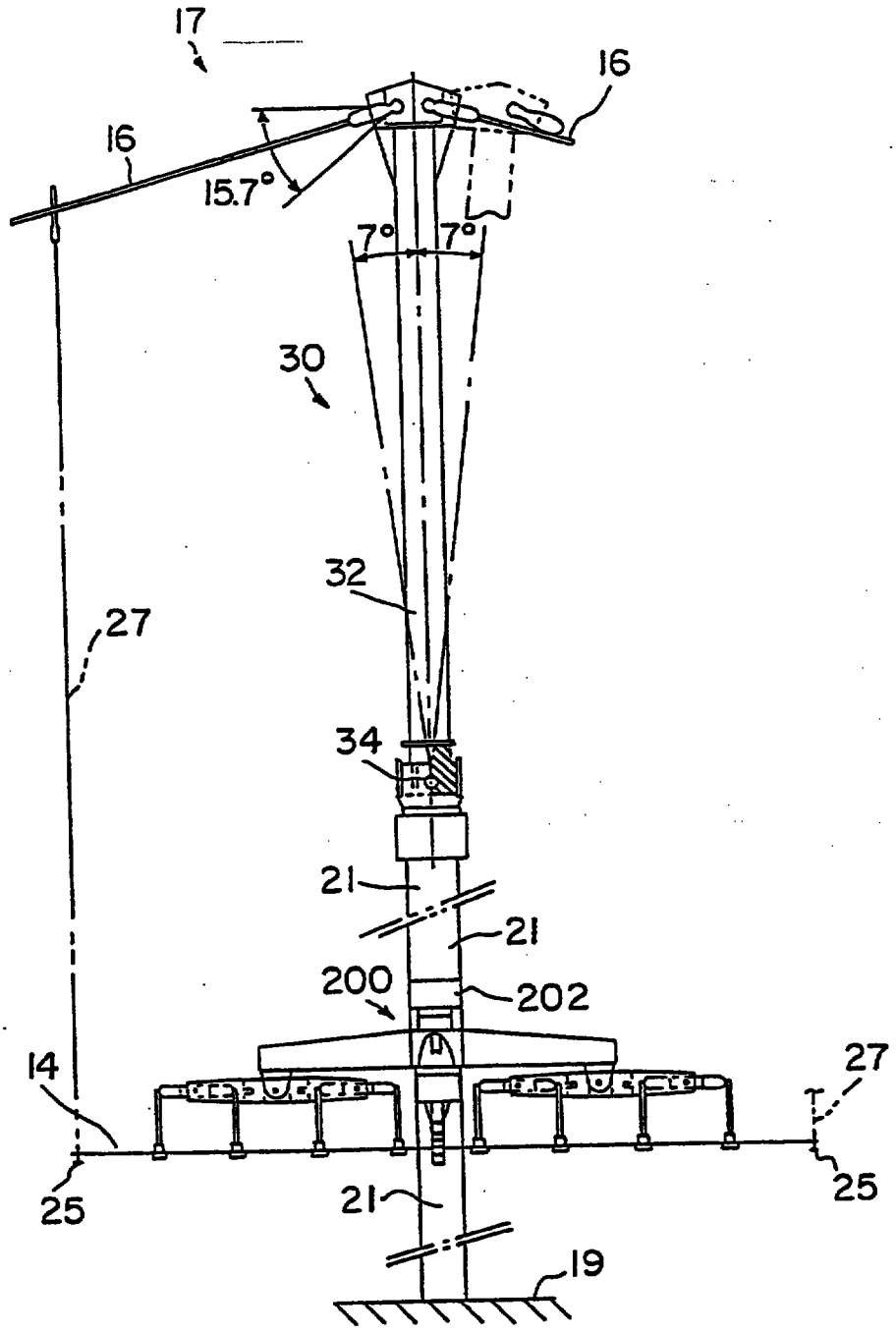

FIG. 6

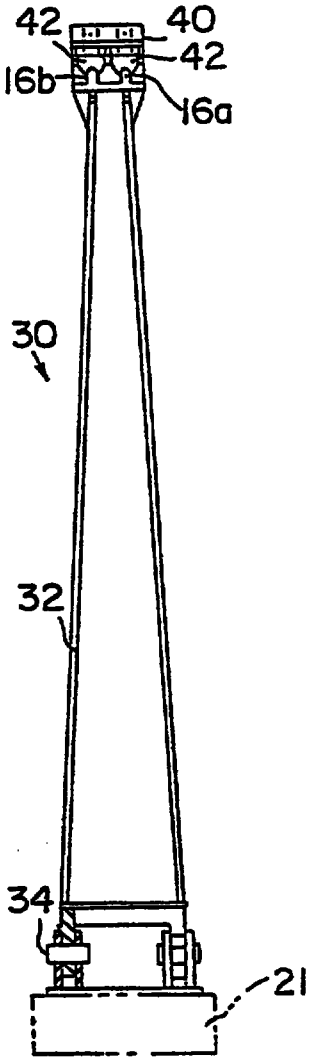

FIG. 7A

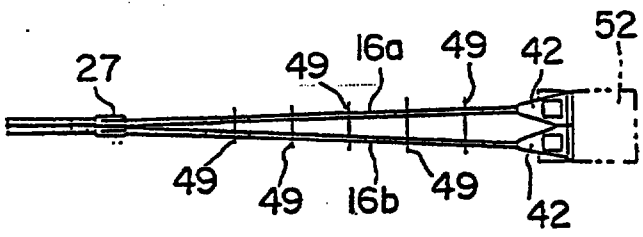

FIG. 7E

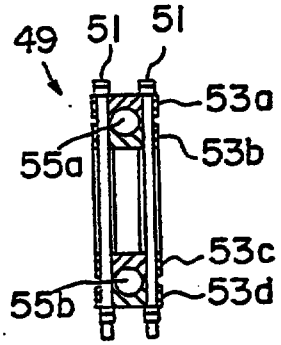

FIG. 7F

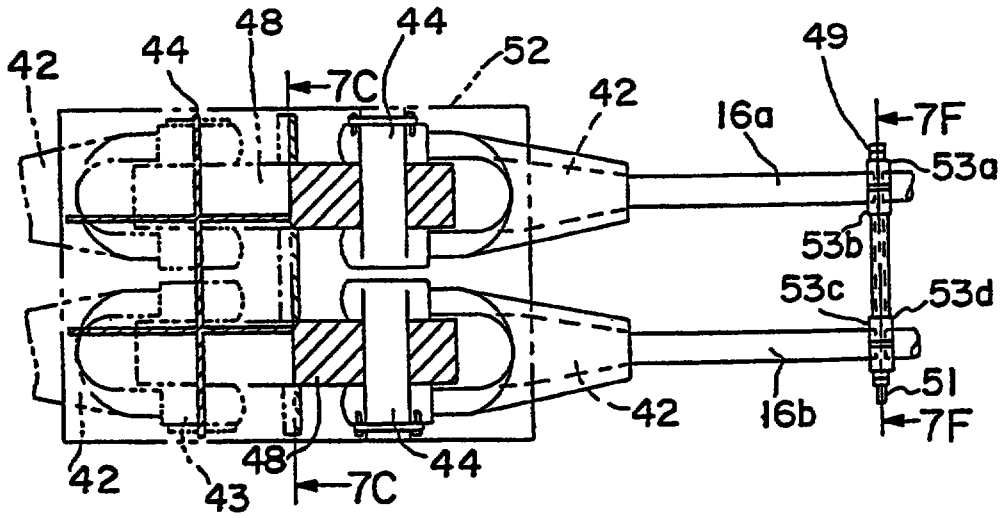

FIG. 7G

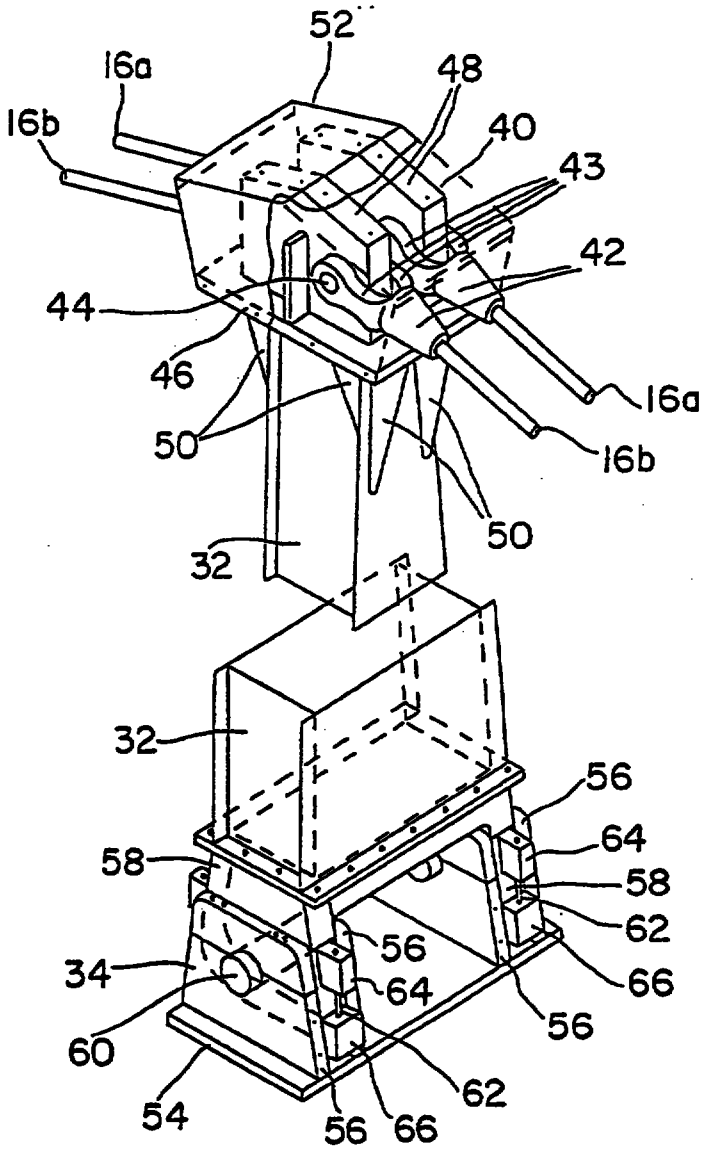
52
16a
48
16b
40
43
42
44
46
16a
50
16b
50
32
32
56
64
58
58
62
56
34
64
66
60
56
62
54
56
66

FIG. 7B

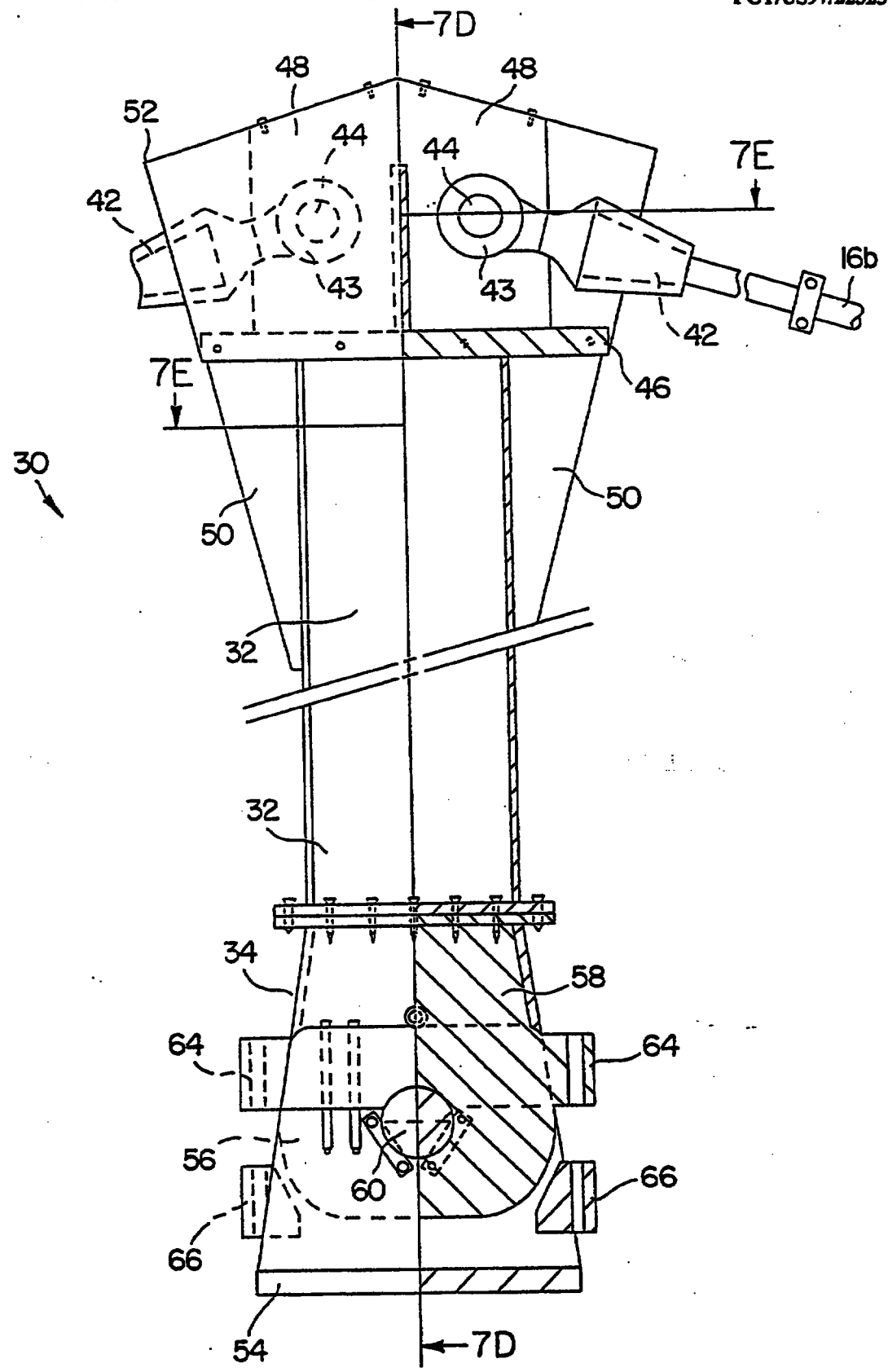
7D
48
48
52
44
44
7E
42
16b
43
43
42
7E
46
30
50
50
32
32
34
58
64
64
56
60
66
66
54
7D

FIG. 7C

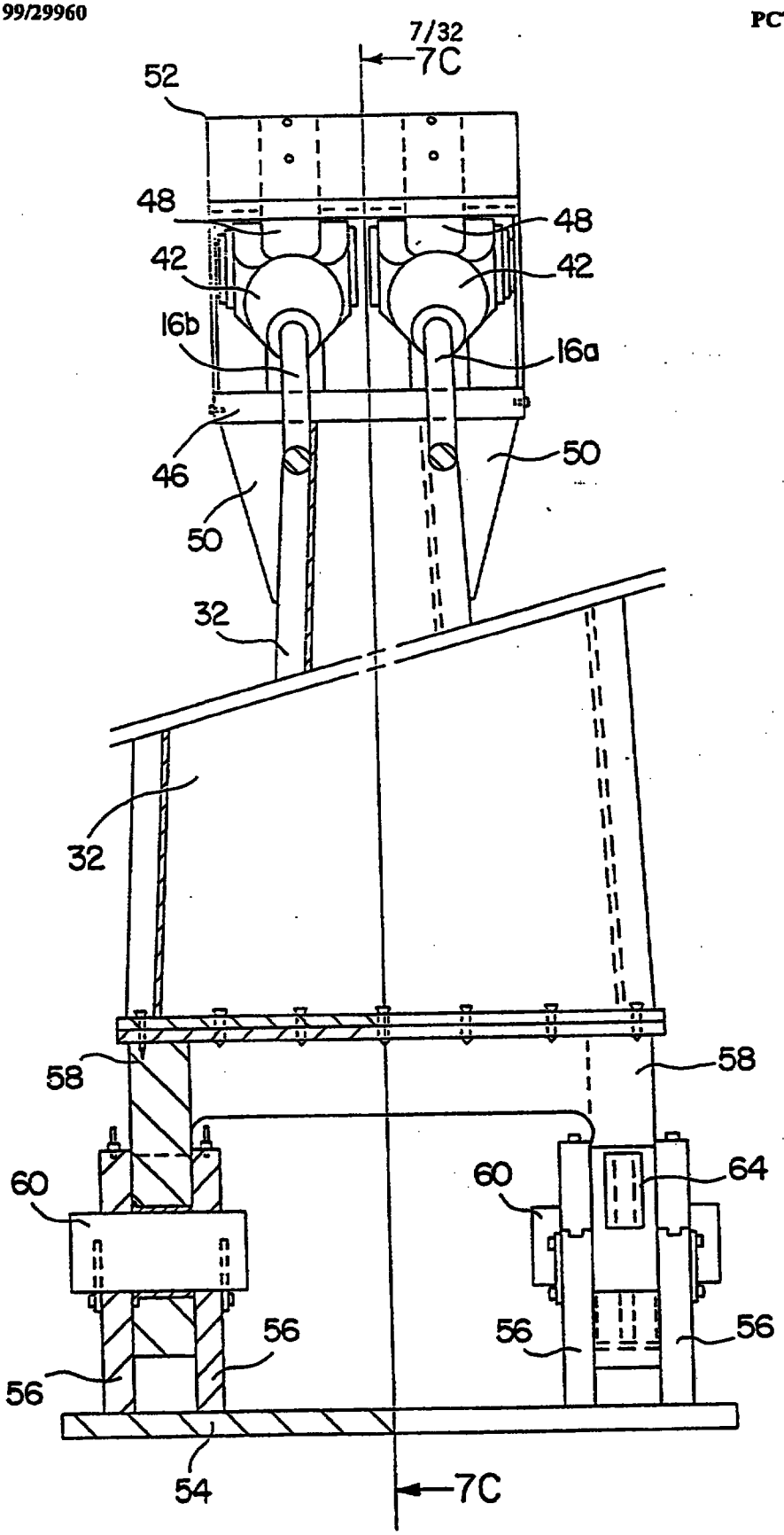
7/32
7C
52
48
48
42
42
16b
16a
46
50
50
50
32
32
58
58
60
60
64
56
56
56
56
54
7C

FIG. 7D

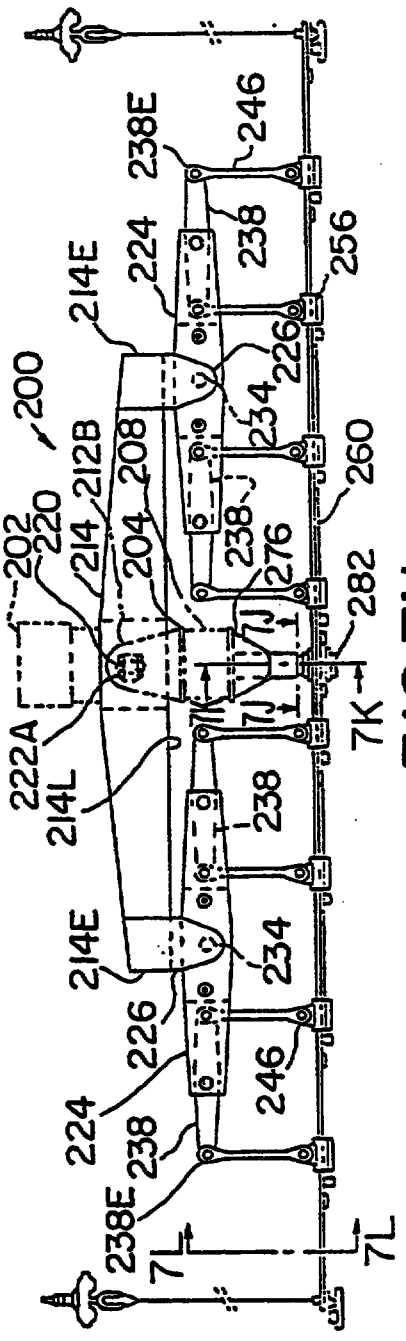

FIG. 7H

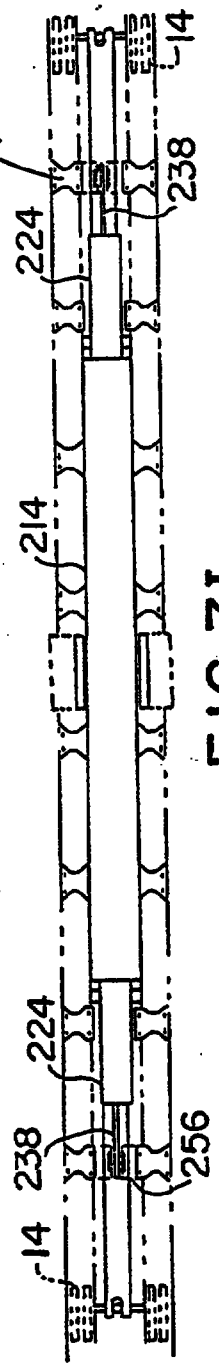

FIG. 7I

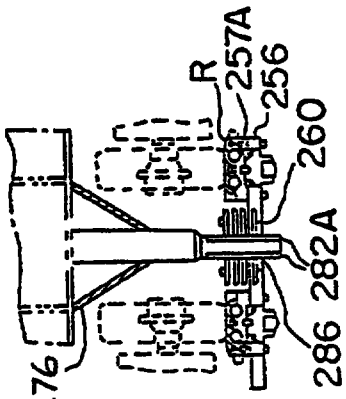

FIG. 7K

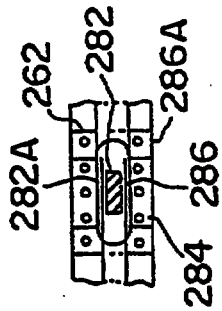

FIG. 7J

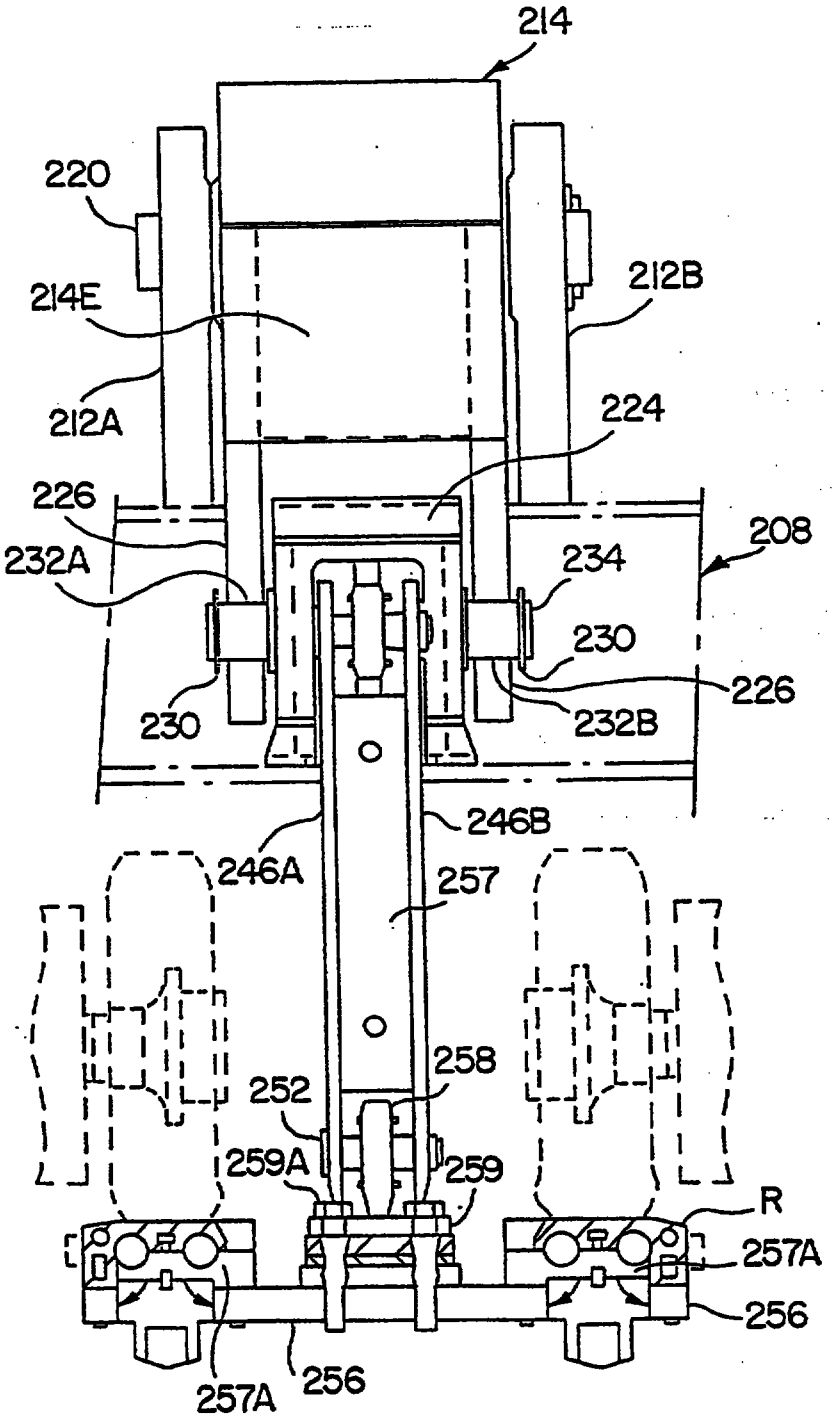
214
220
214E
212B
212A
224
226
208
232A
234
230
226
230
232B
246B
246A
257
258
252
259A
259
R
257A
256
257A
256

FIG. 7L

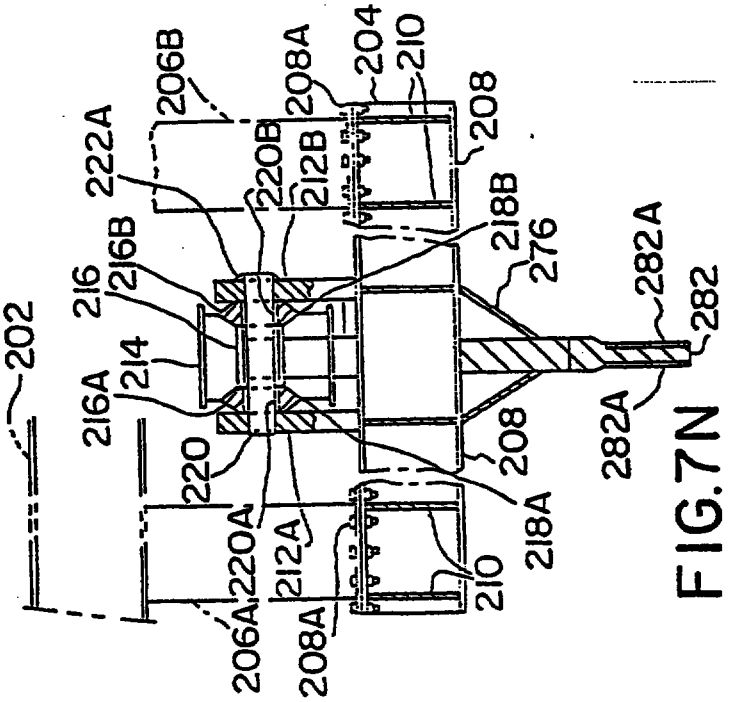

FIG.7N

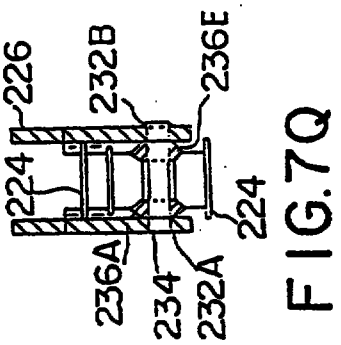

FIG.7Q

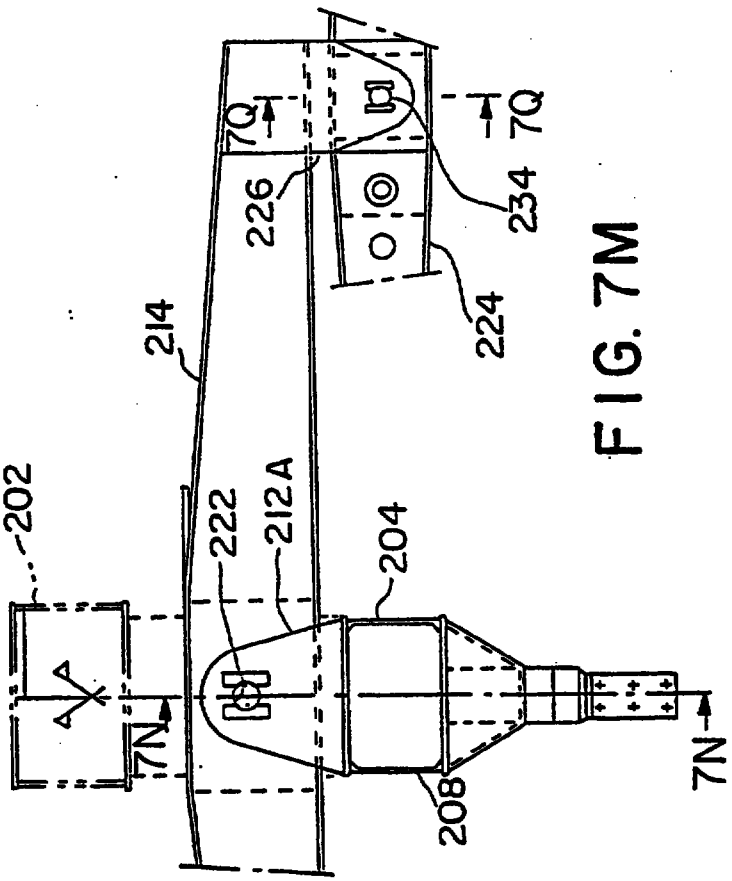

FIG. 7M

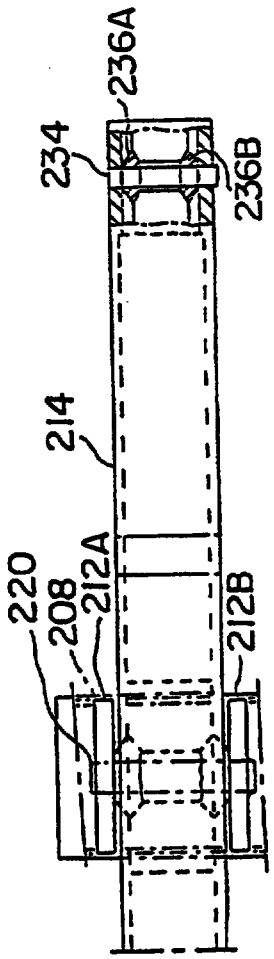

FIG. 7P

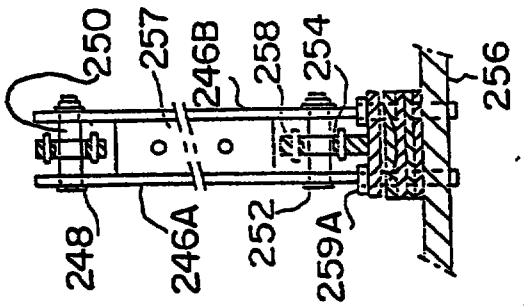

FIG. 7T

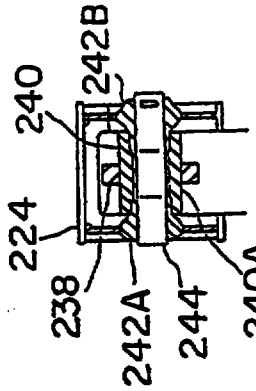

FIG. 7S

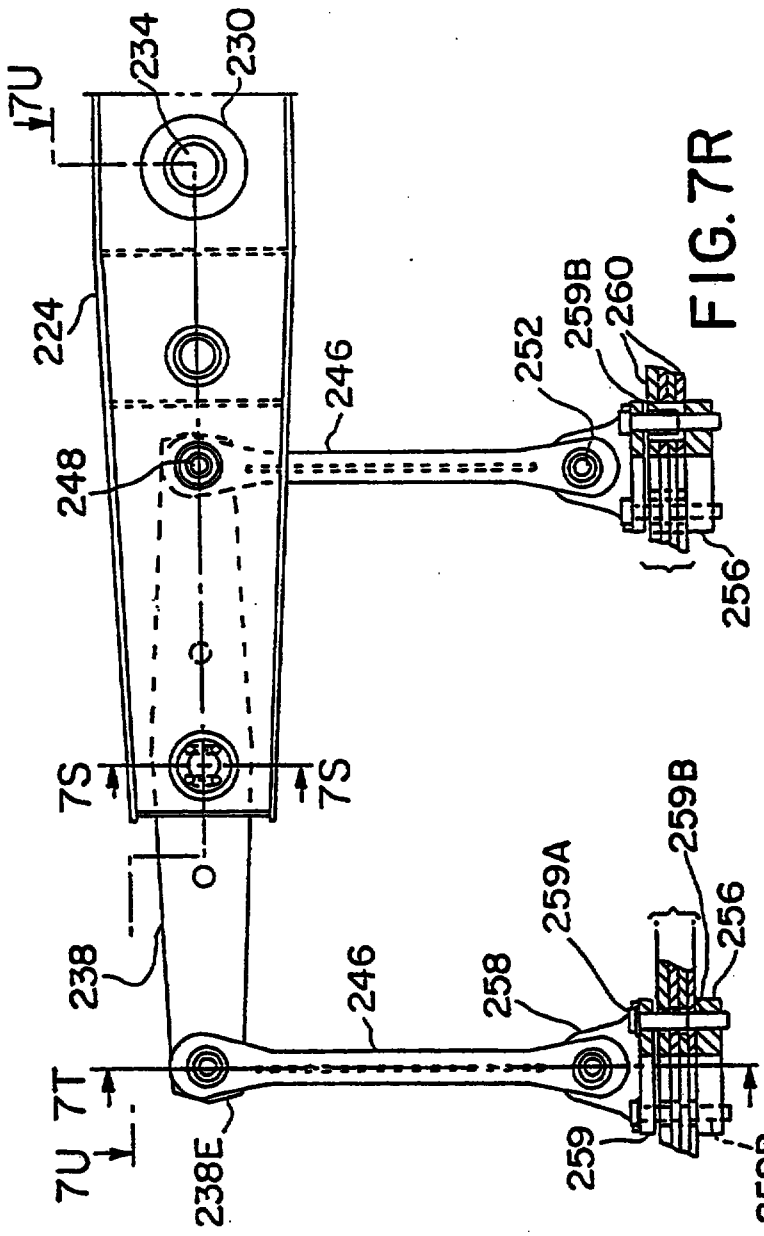

FIG. 7R

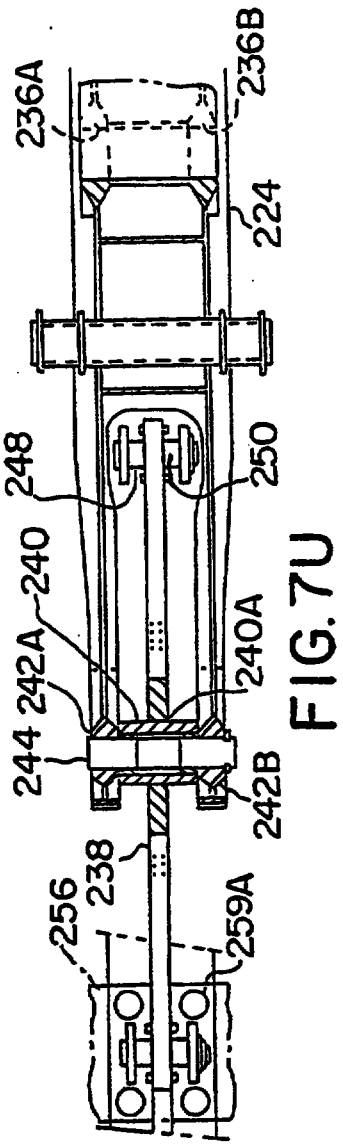

FIG. 7U

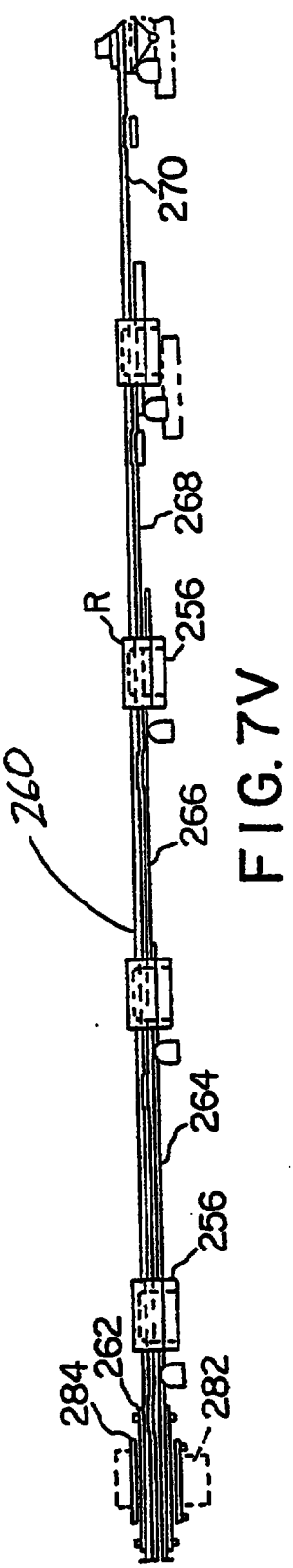

FIG. 7V

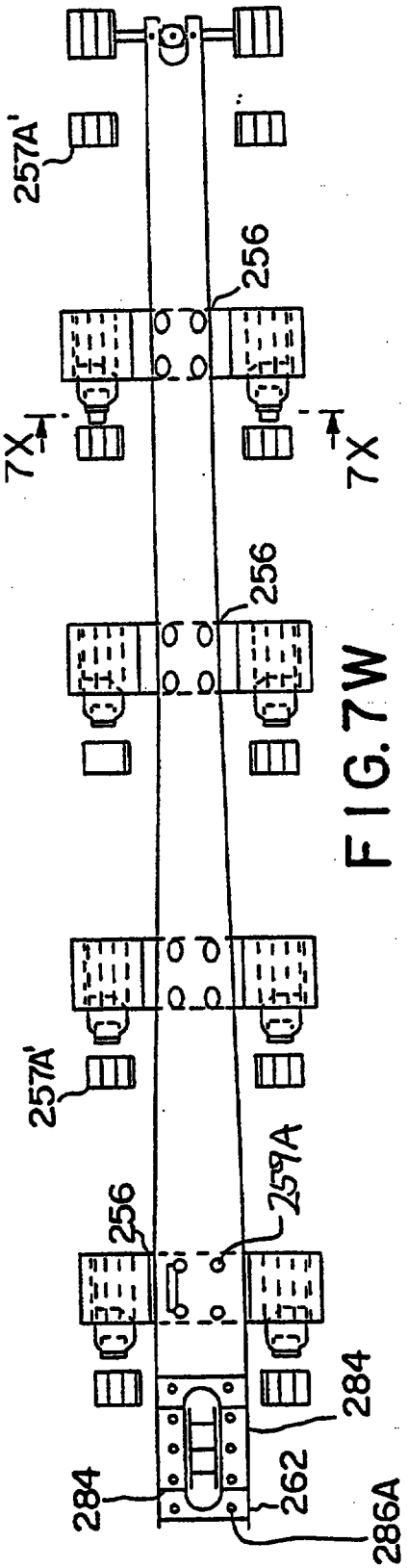

FIG. 7W

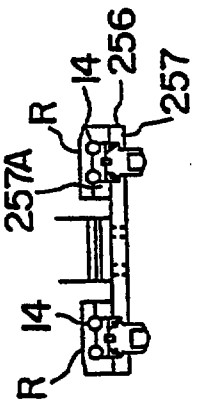

FIG. 7X

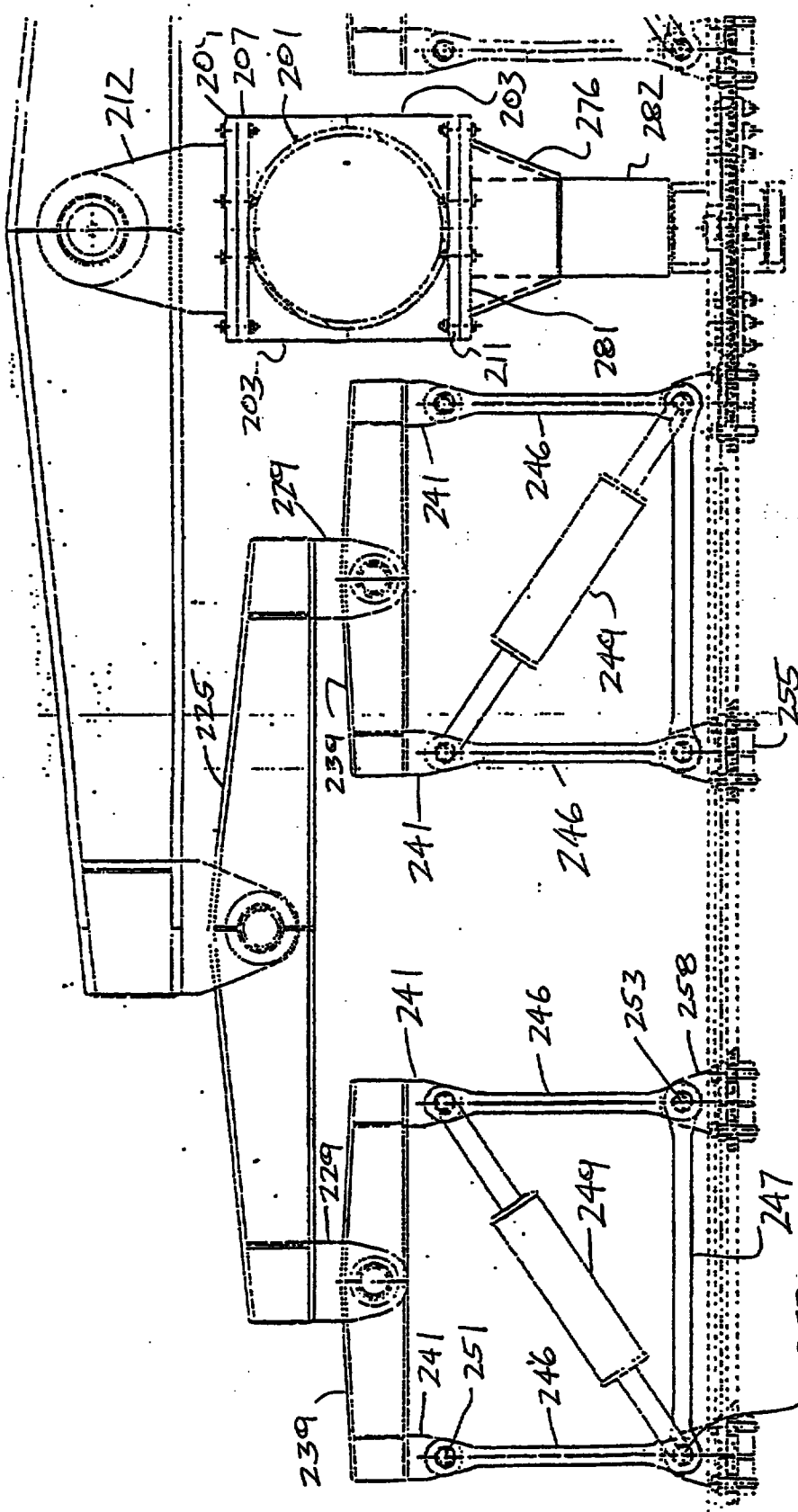
212
201
207
201
203
276
282
281
211
203
241
246
229
249
225
239
255
241
246
241
246
253
258
229
249
247
241
251
246
239
253

FIG. 7Y

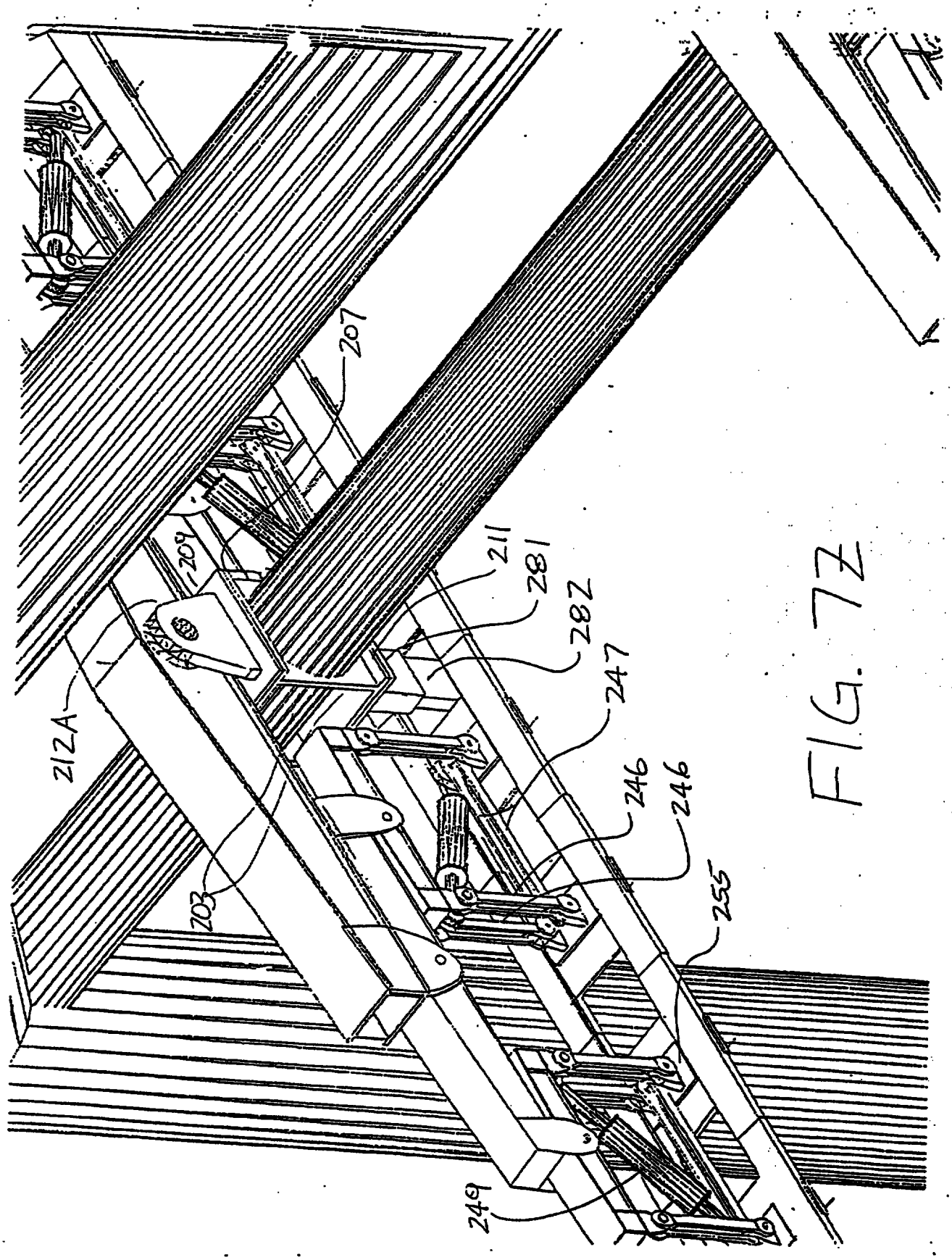

FIG. 7Z

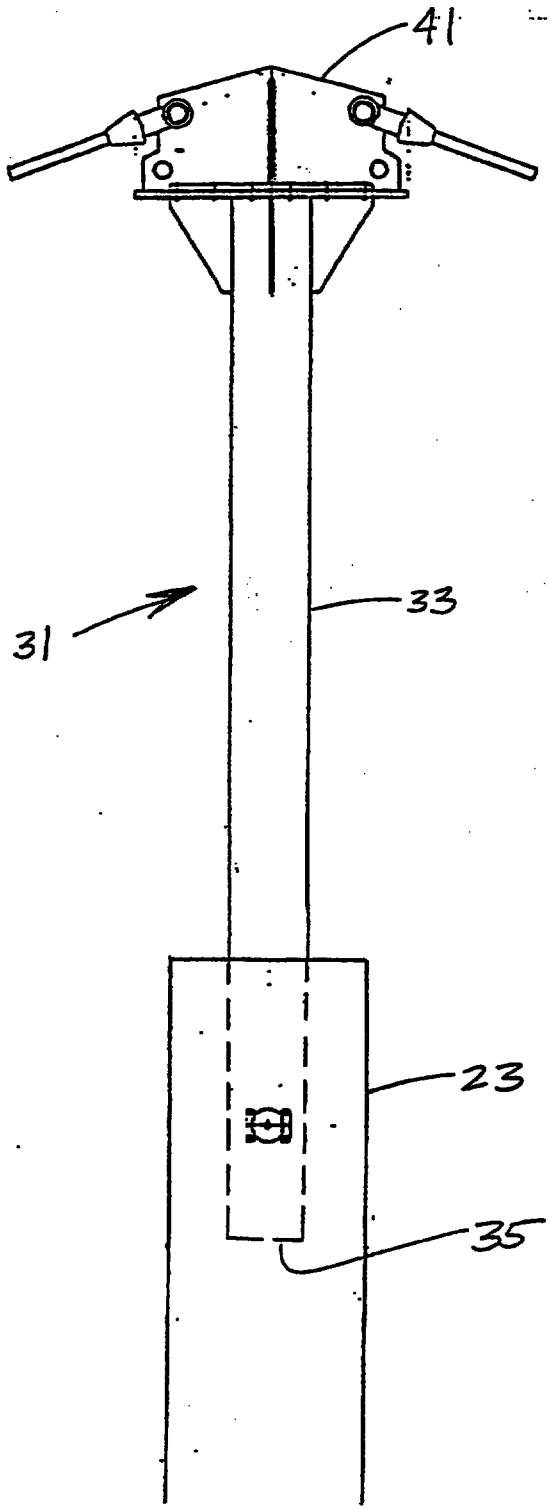

FIG. 7AA

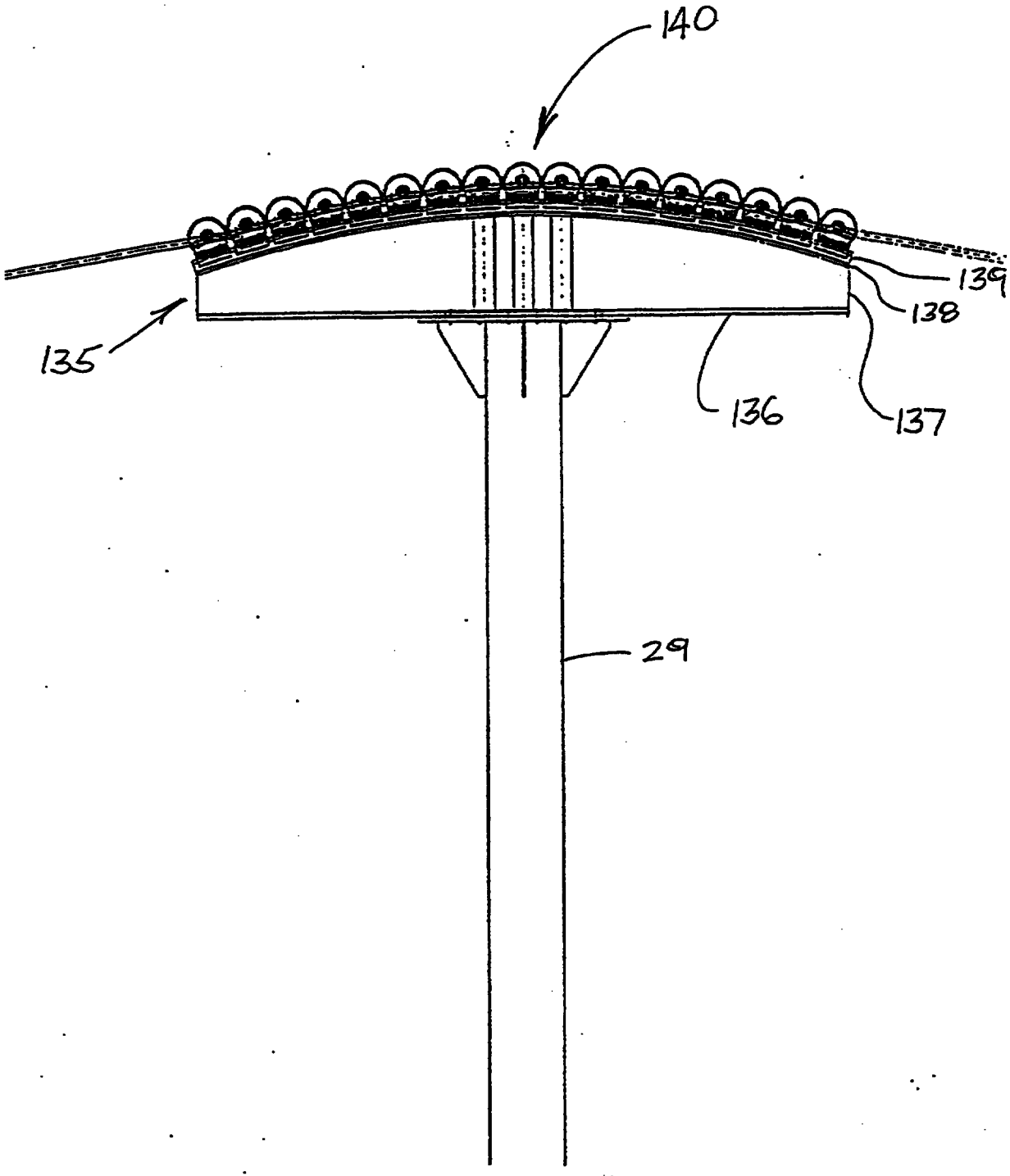

FIG. 7AB

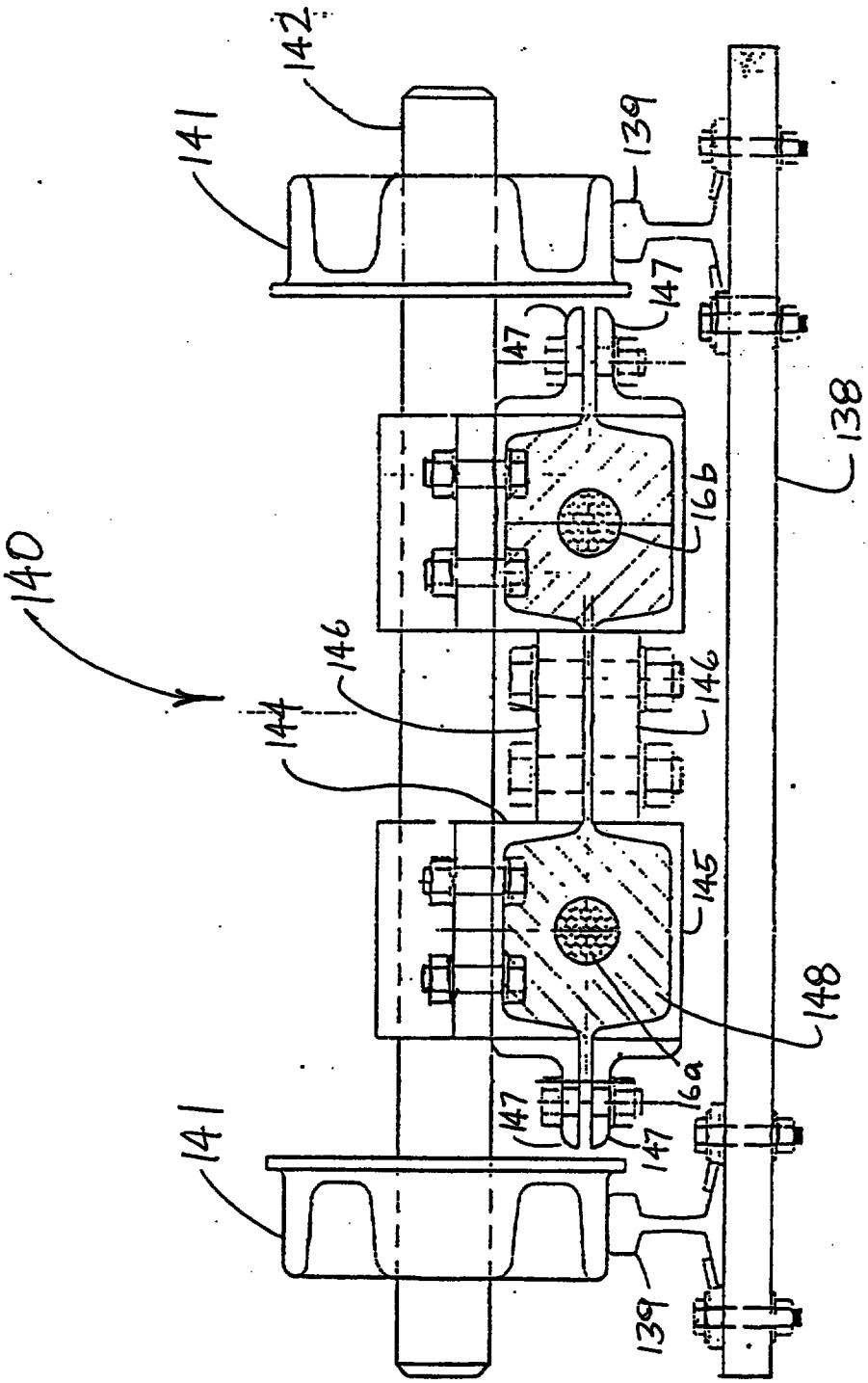

FIG. 7AC

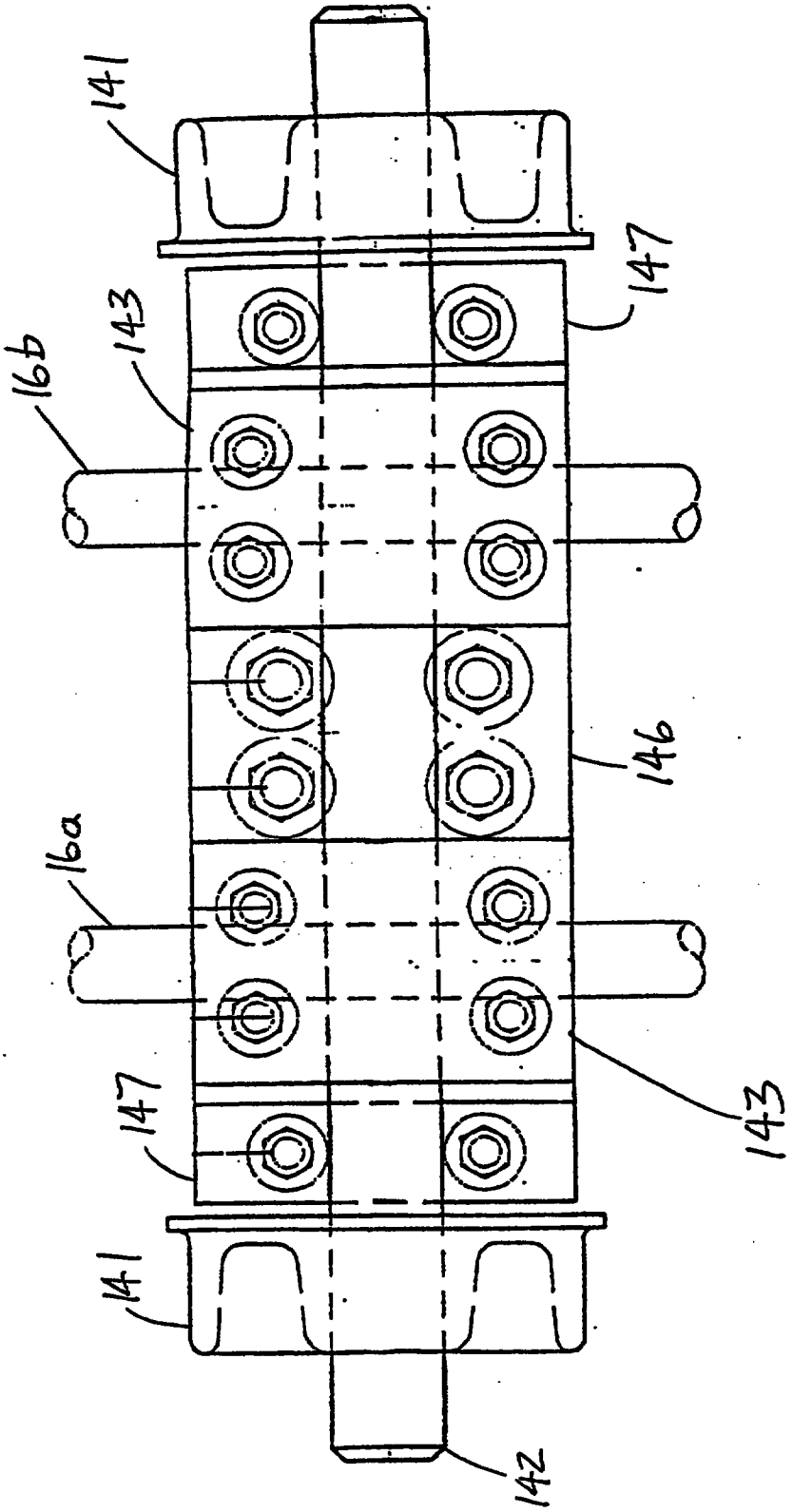

FIG. 7AD

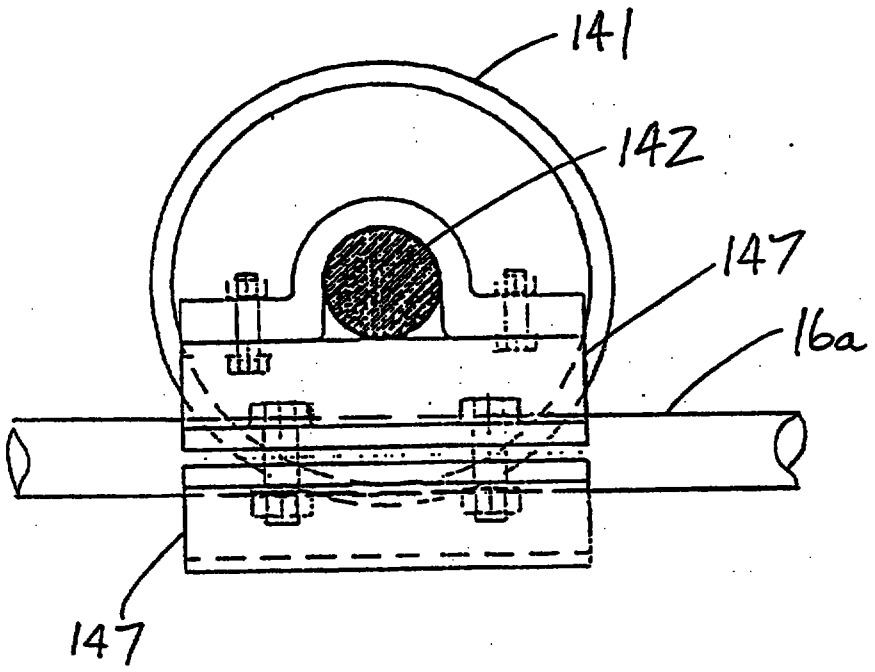

FIG. 7AE

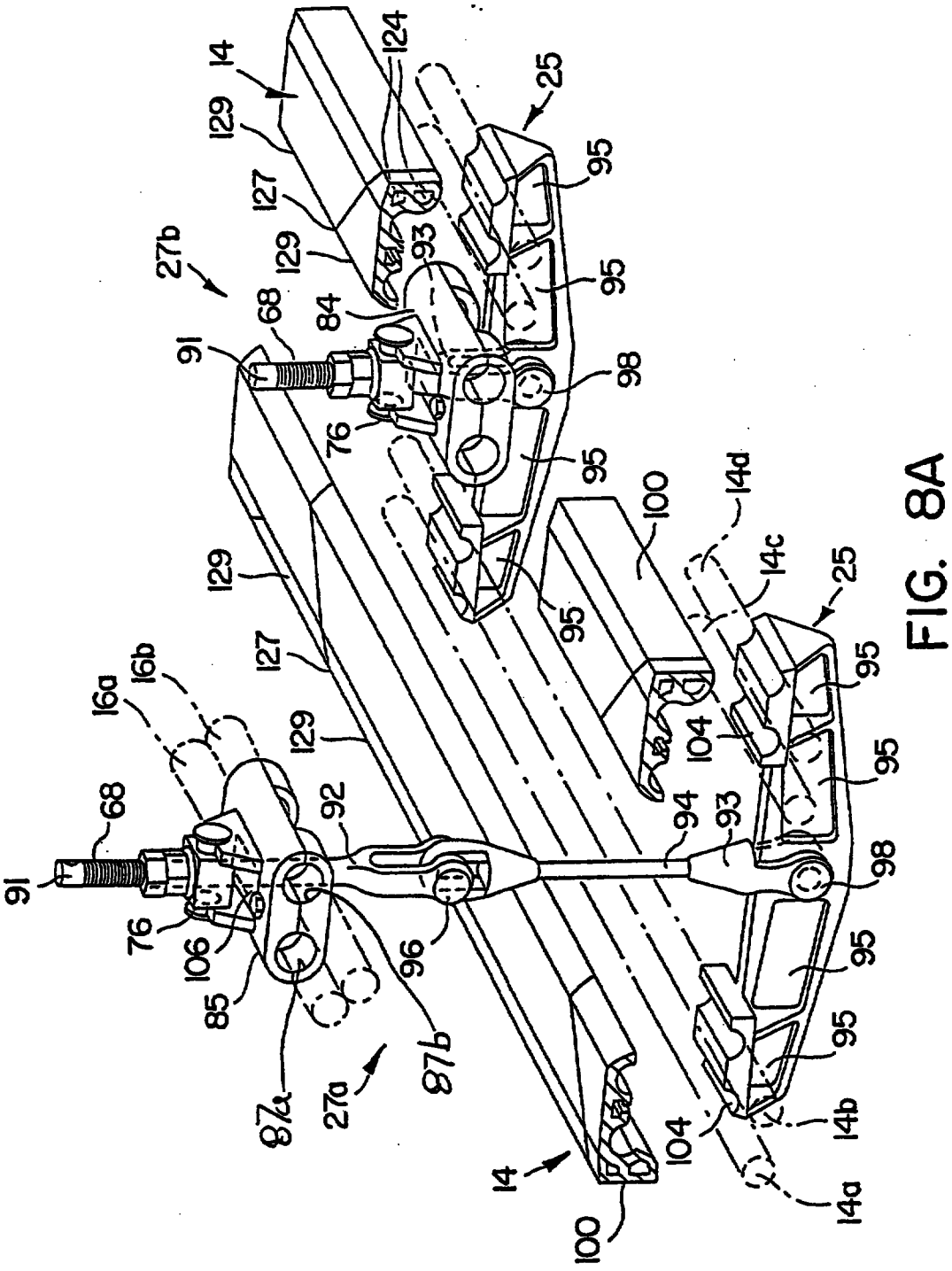
14
124
25
129
127
95
27b
93
68
84
91
98
76
100
14d
14c
16a
16b
92
94
104
106
85
96
87a
87b
27a
14b
14a

FIG. 8A

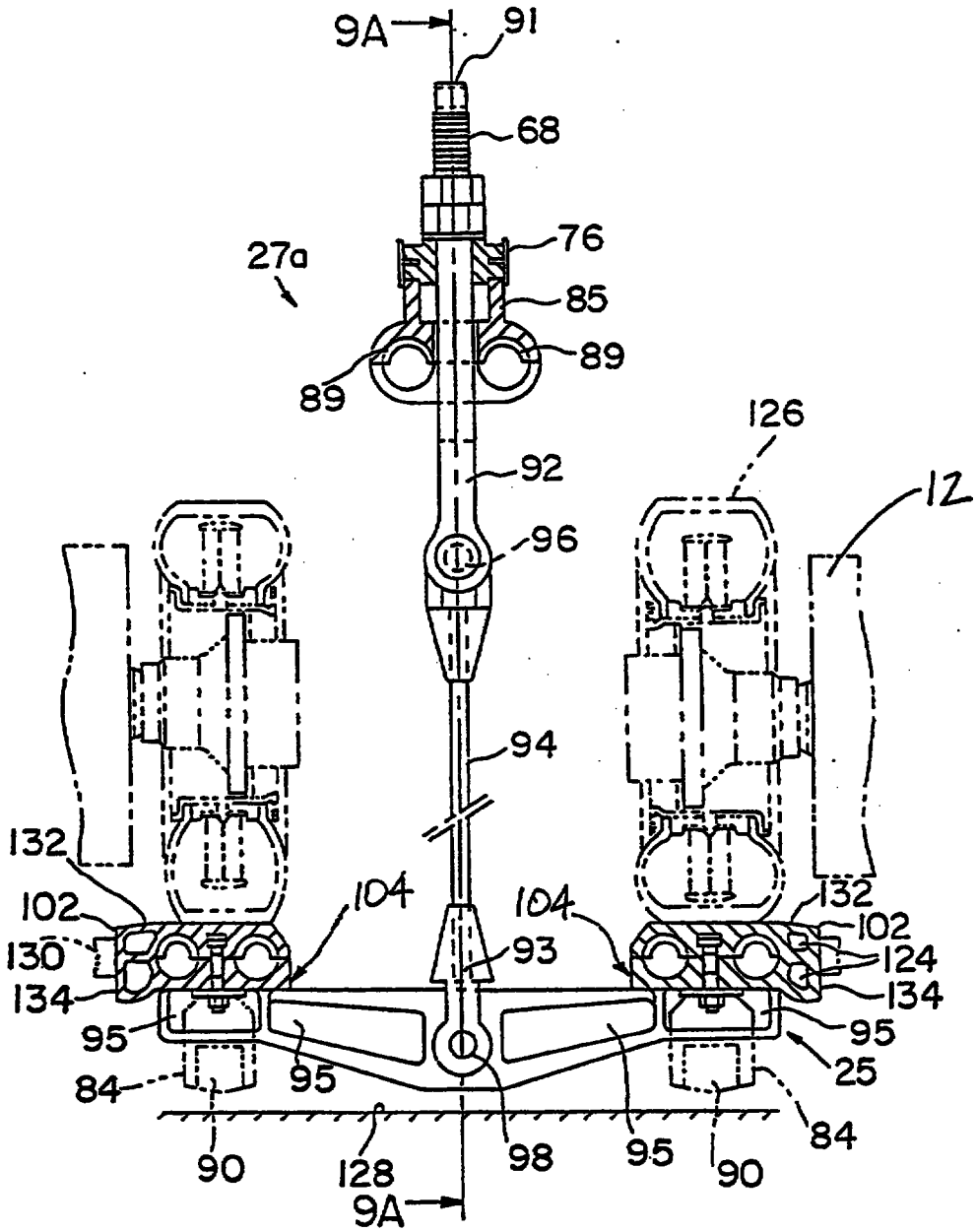
9A
91
68
76
27a
85
89
89
126
92
12
96
94
132
102
104
104
132
102
130
93
124
134
134
95
95
95
25
84
84
90
128
98
95
90
9A

FIG. 8B

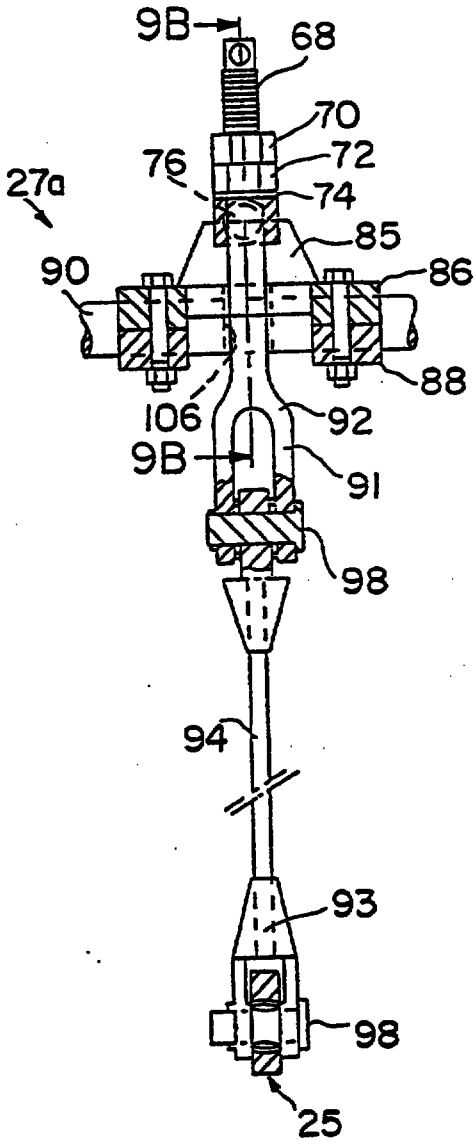
9B
68
70
72
76
74
27a
85
90
86
88
106
92
9B
91
98
94
93
98
25

FIG.9A

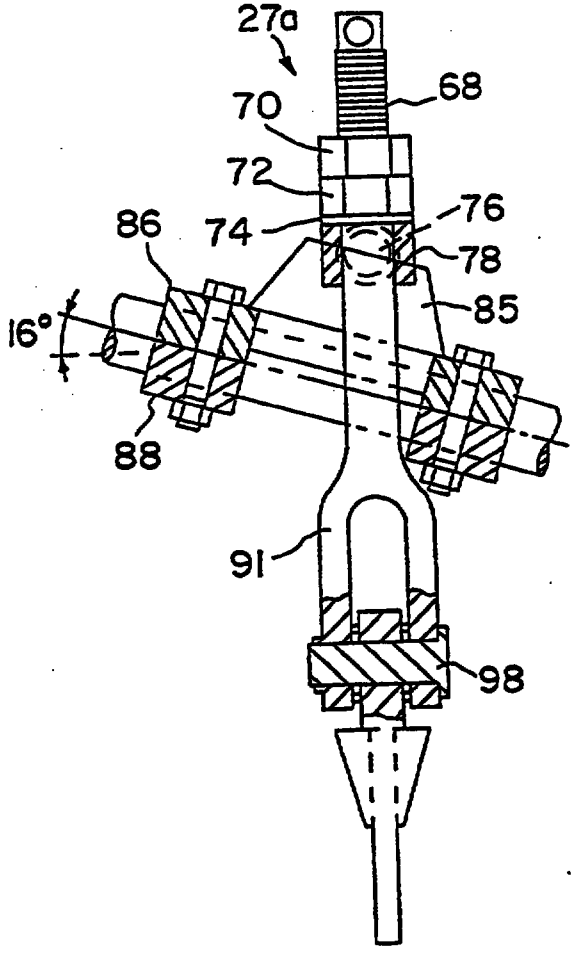
27a
68
70
72
76
74
86
78
85
16°
88
91
98

FIG.9B

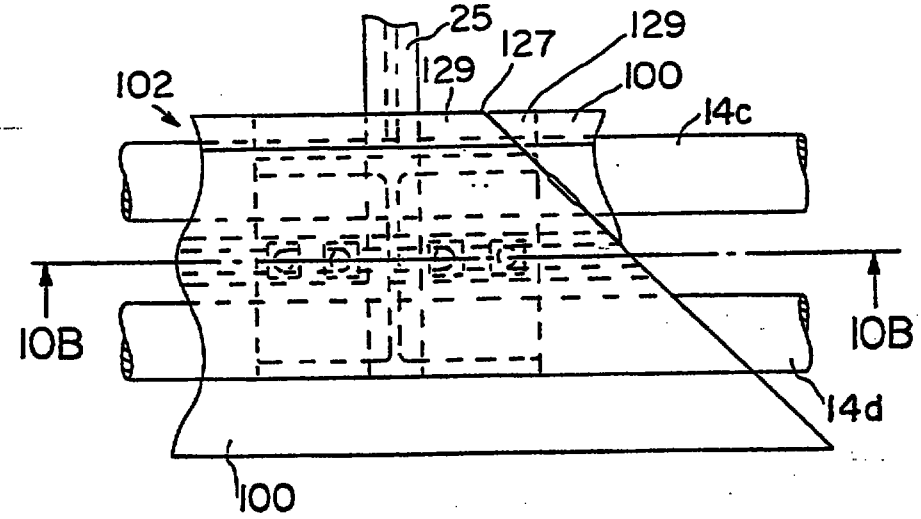

FIG. 10A

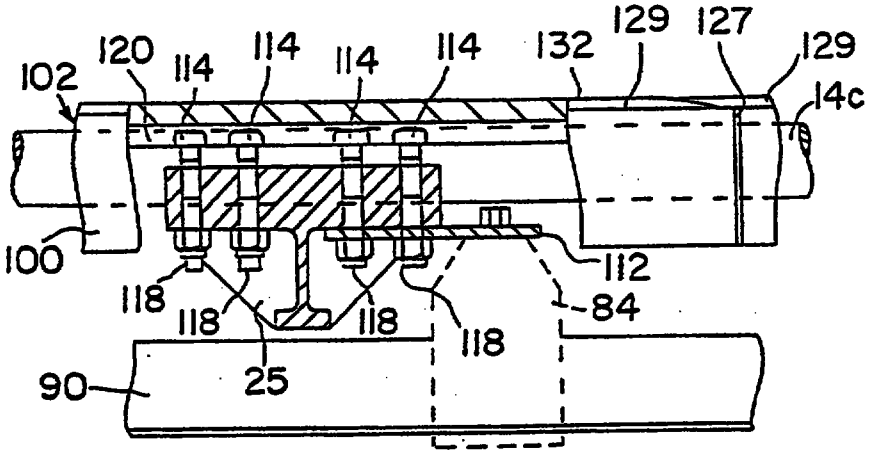

FIG. 10B

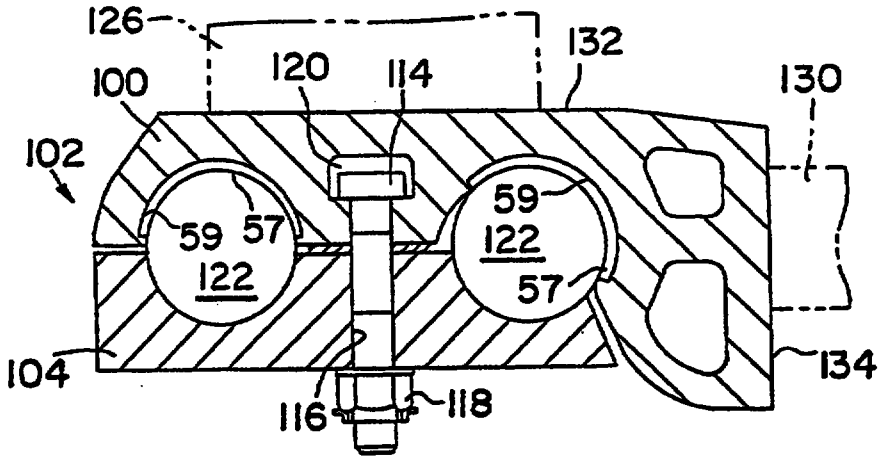

FIG. 10C

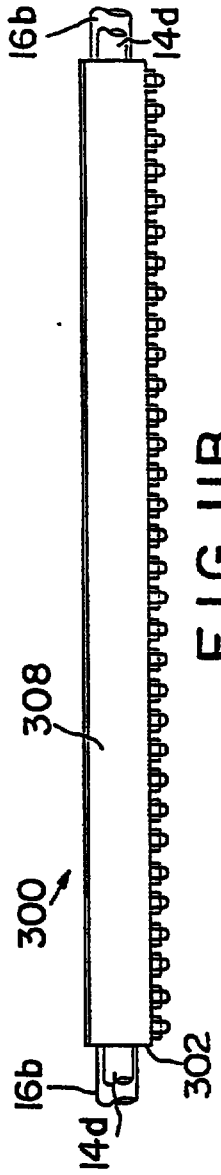

FIG. IIB

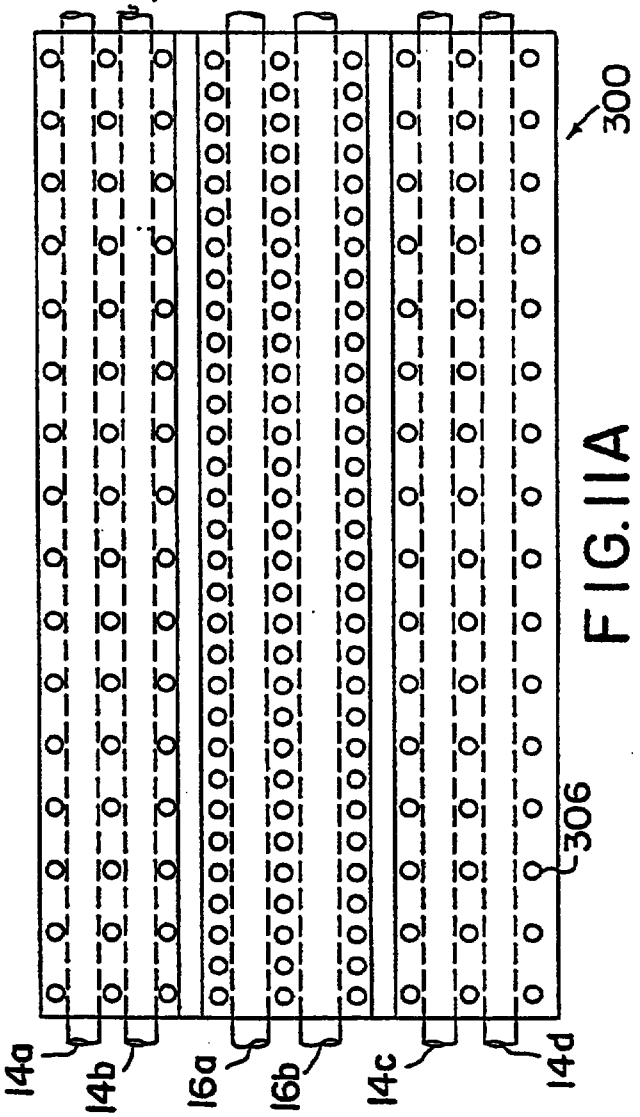

FIG. IIA

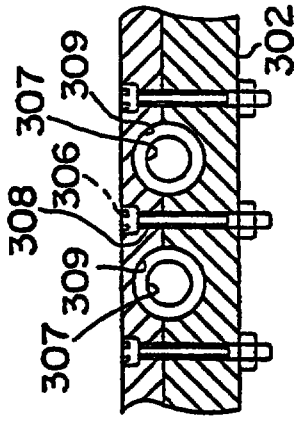

FIG. IID

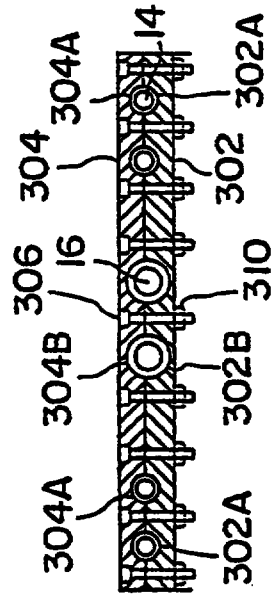

FIG. IIC

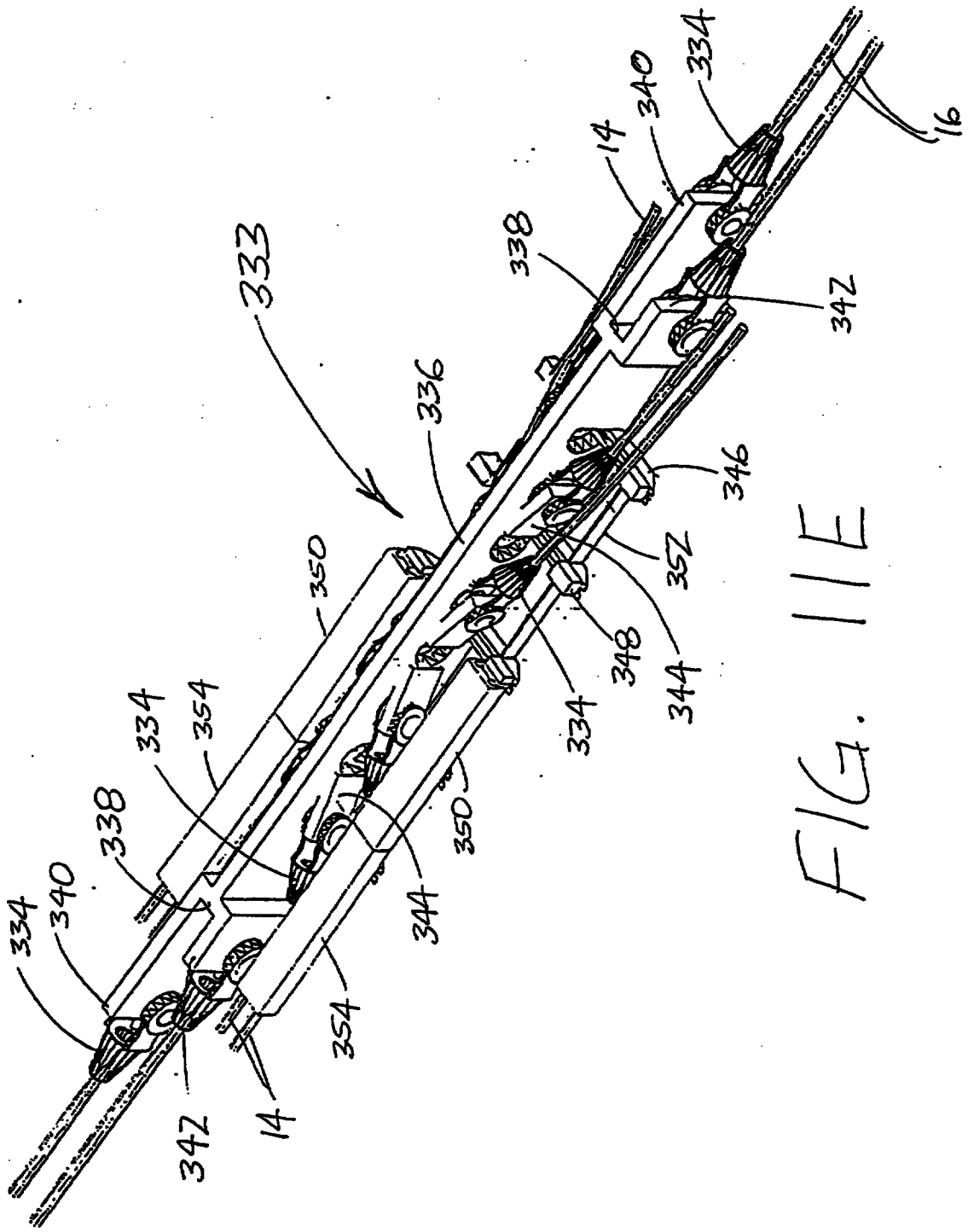

FIG. 11E

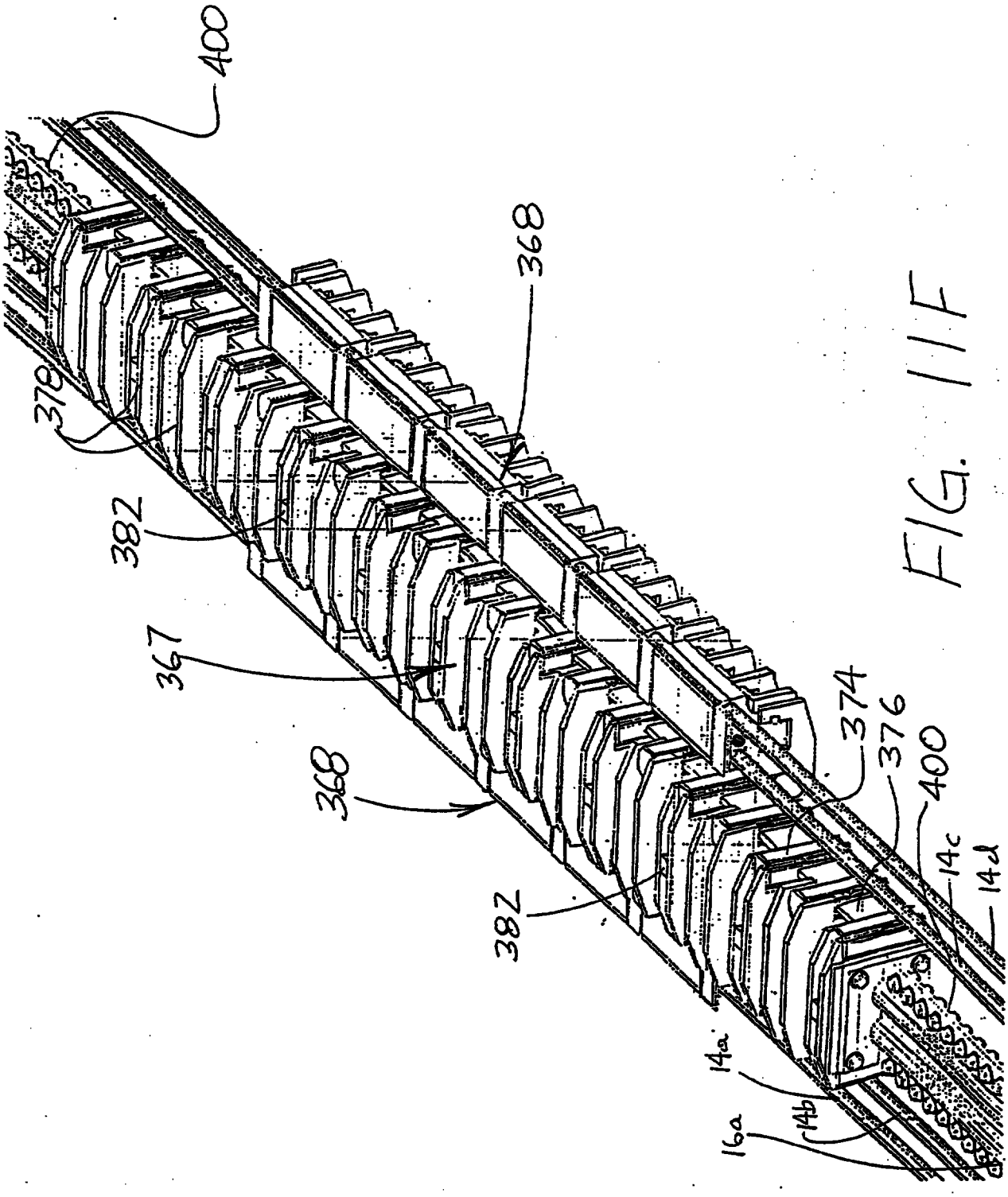

FIG. 11F

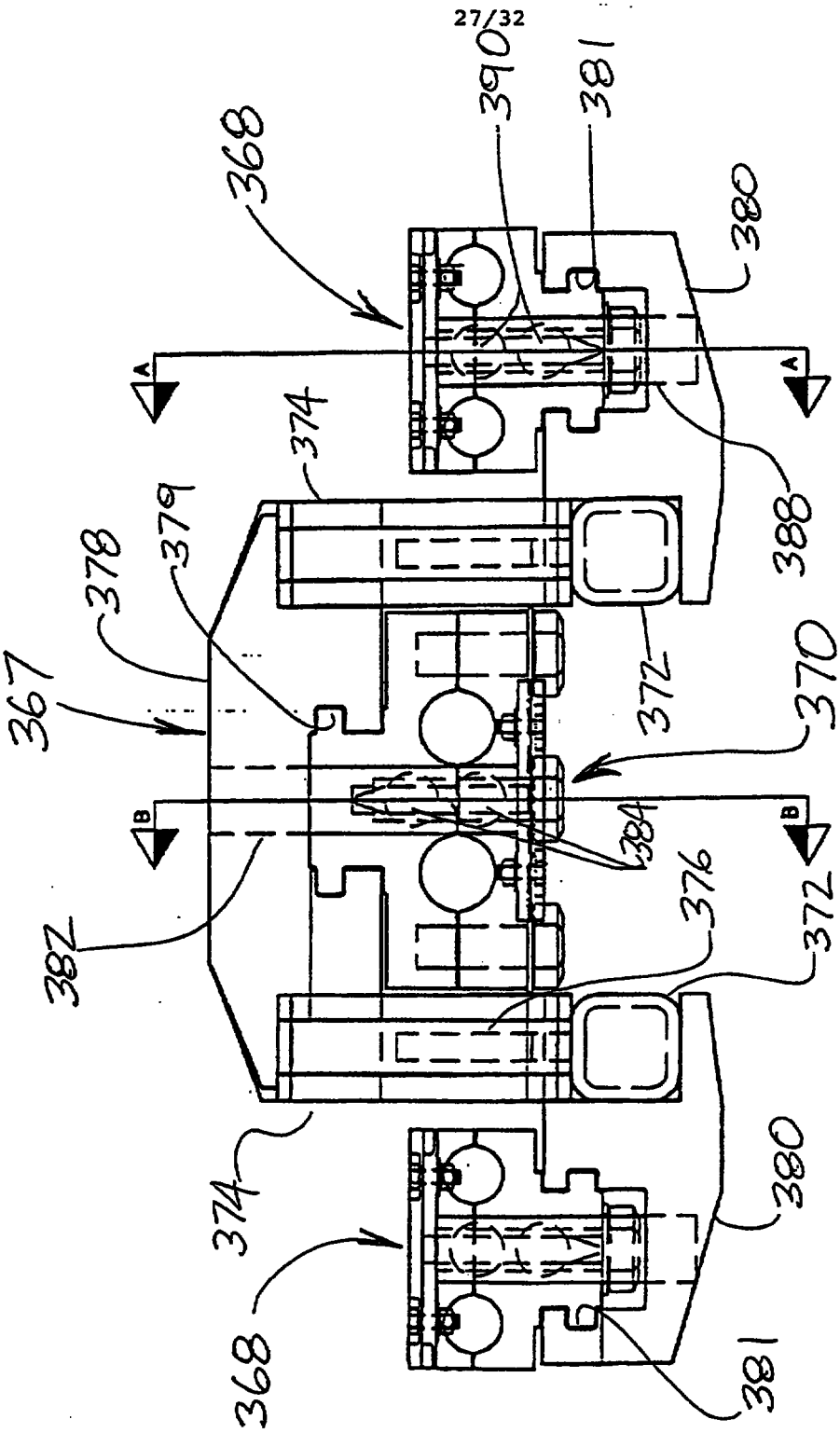
390
381
368
380
A
A
374
379
378
388
367
372
370
B
B
384
376
372
382
374
380
368
381

FIG. 11G

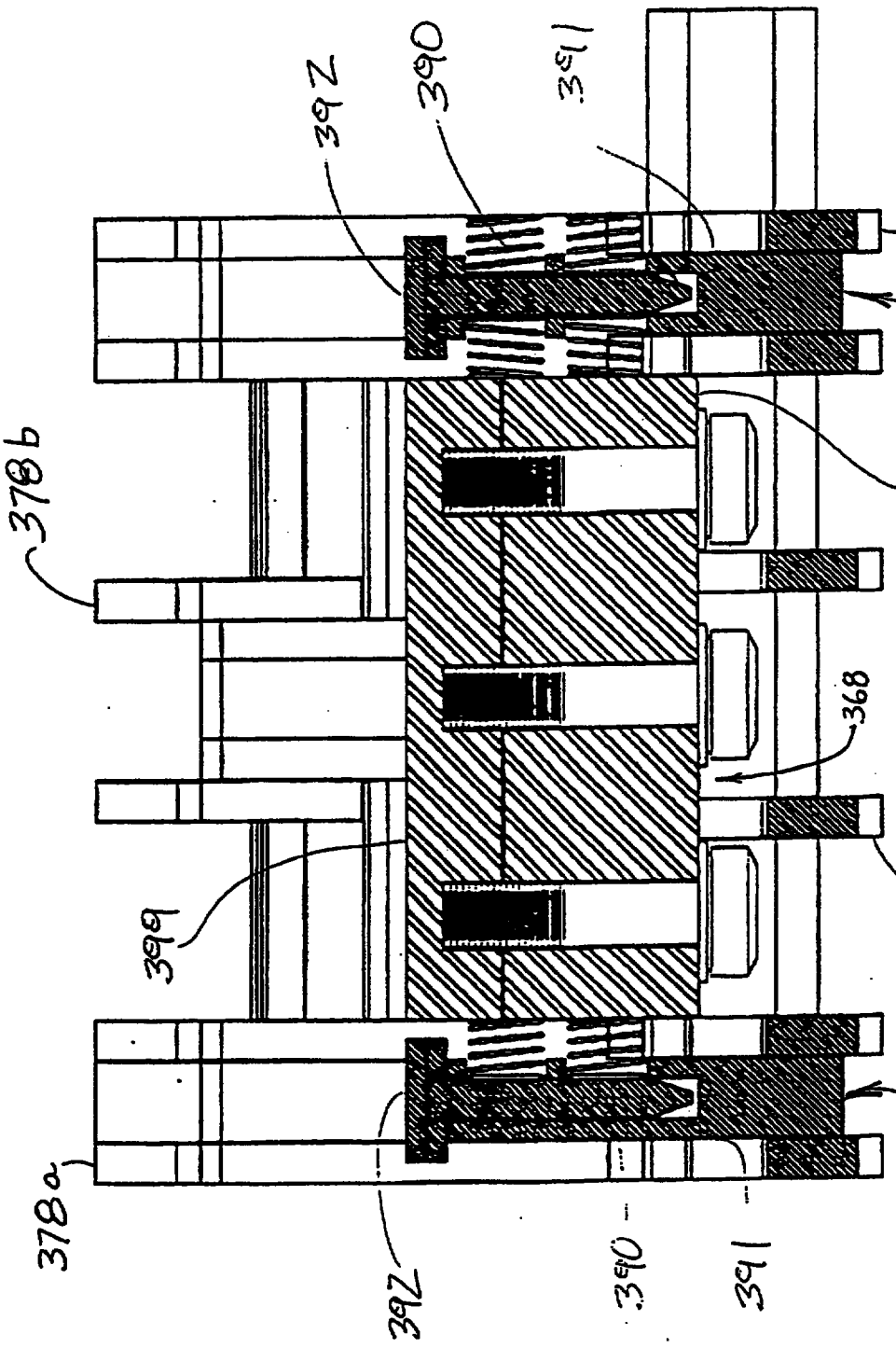

FIG. 11H

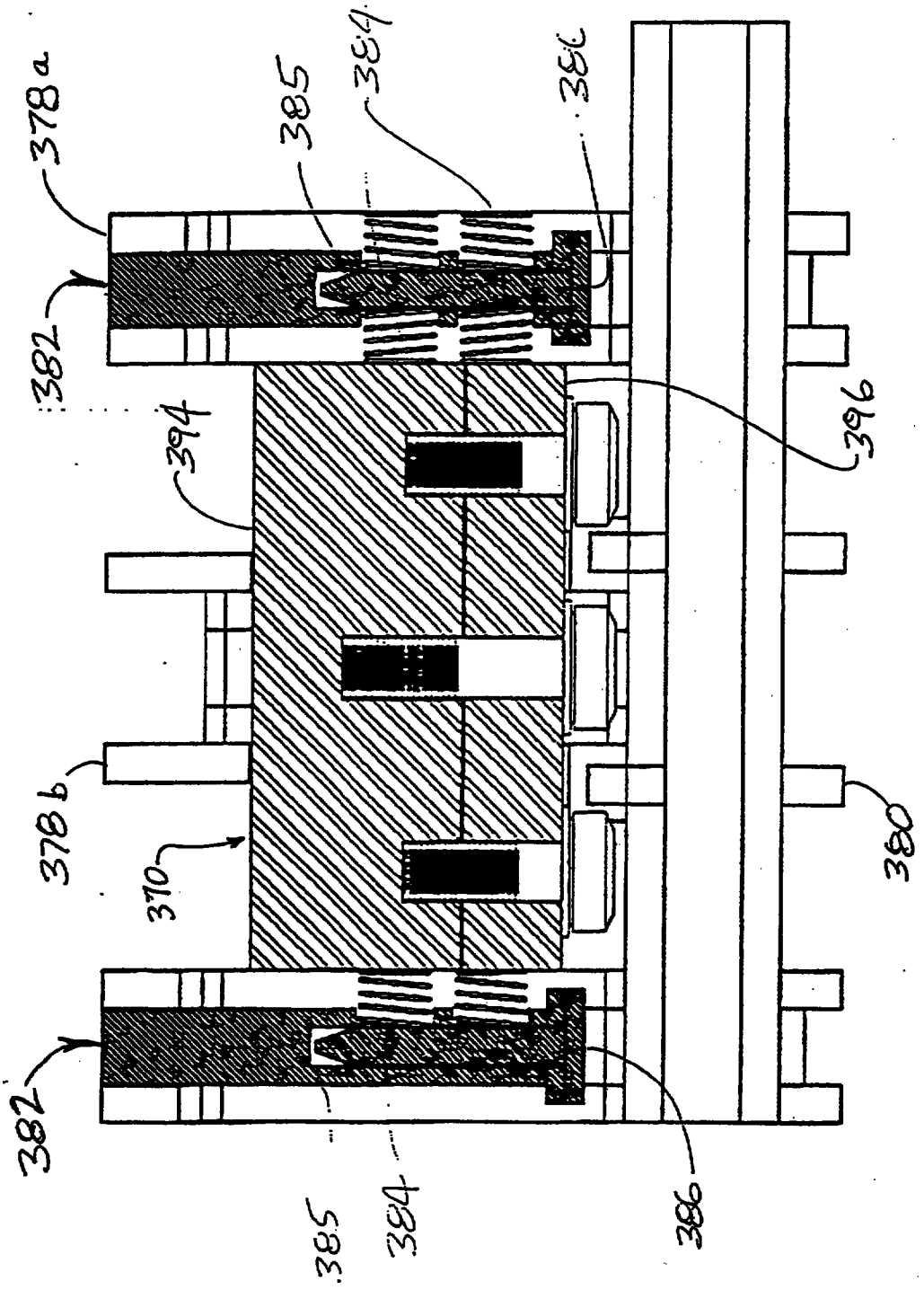

FIG. 11I

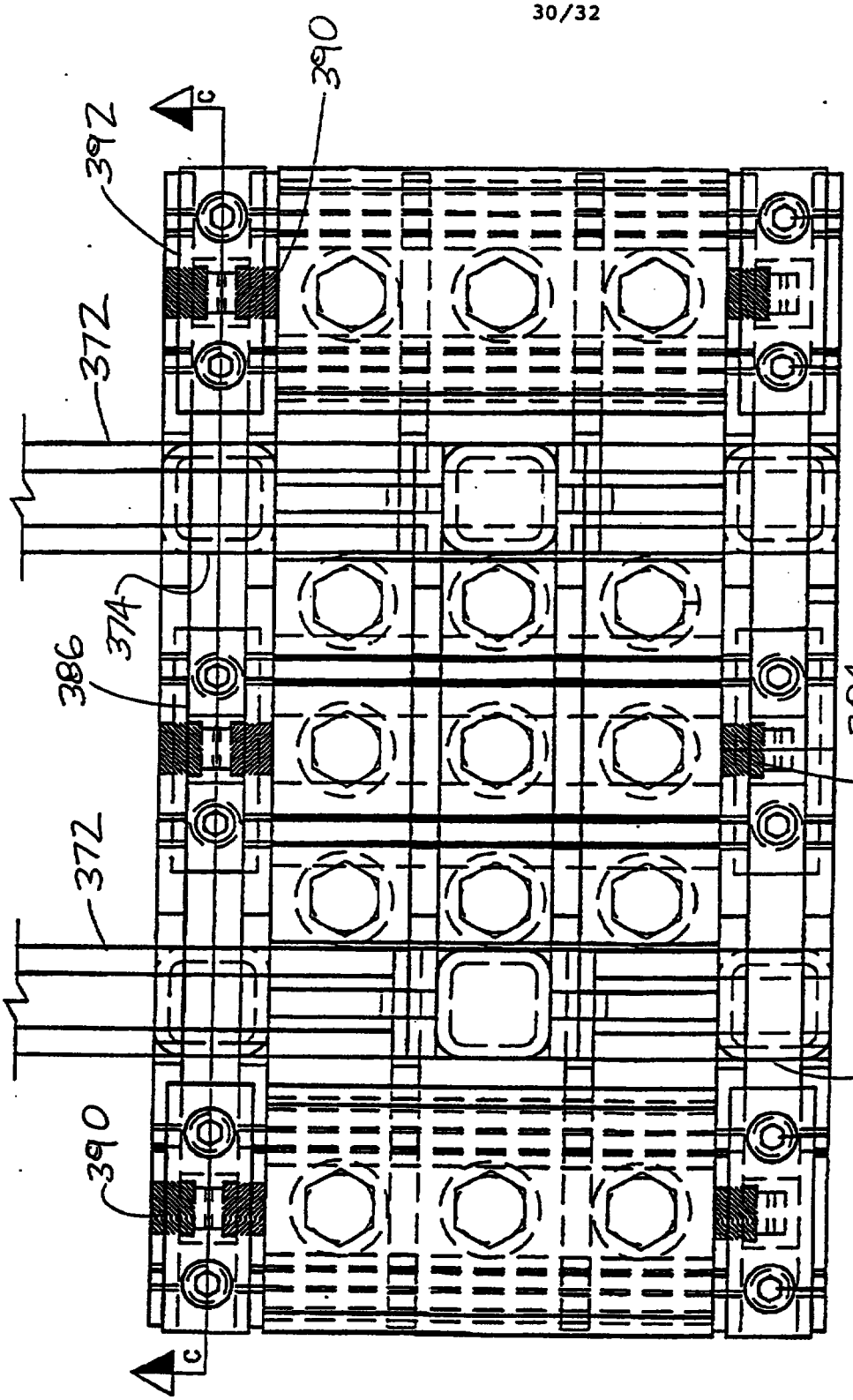

FIG. 11J

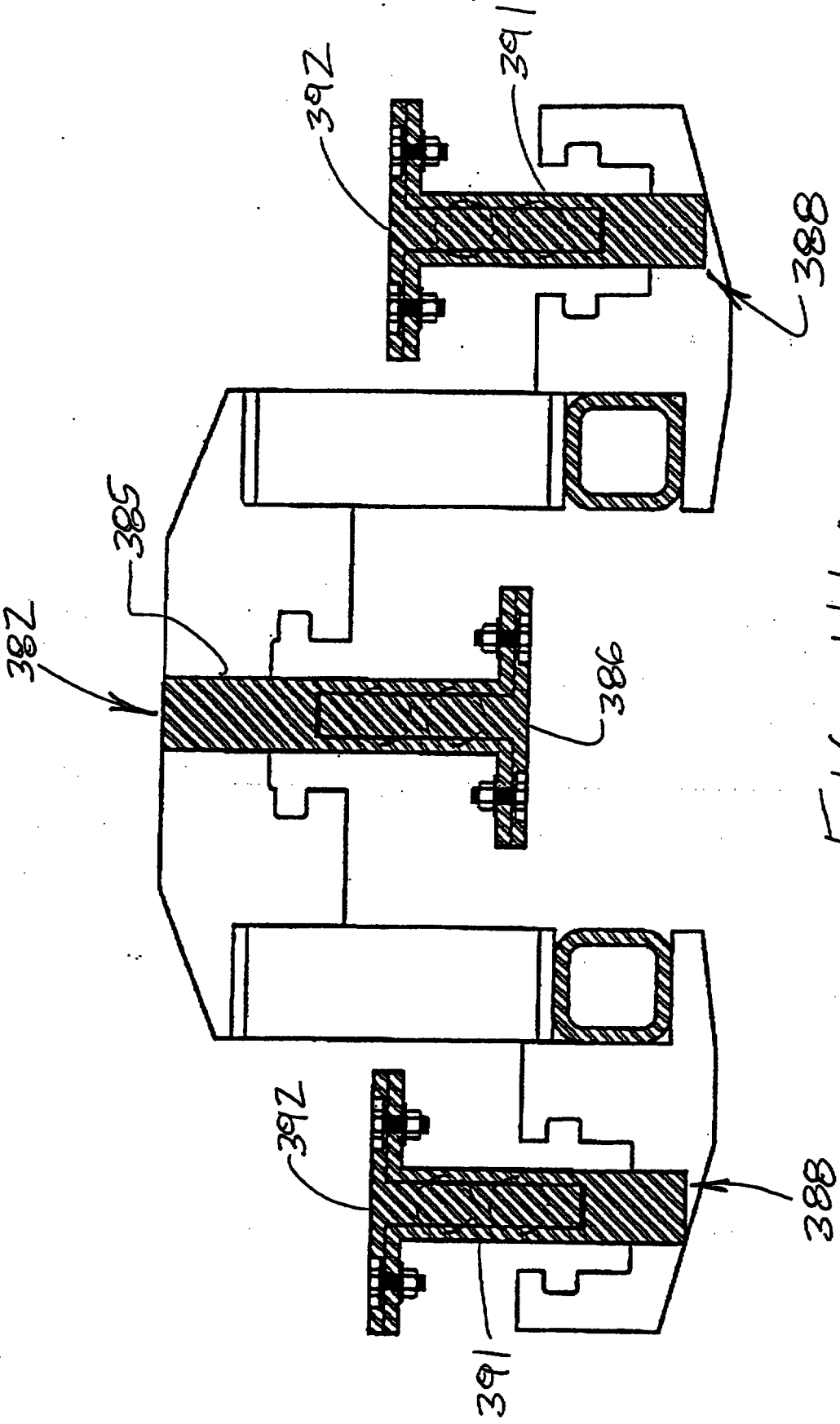

FIG. 11K

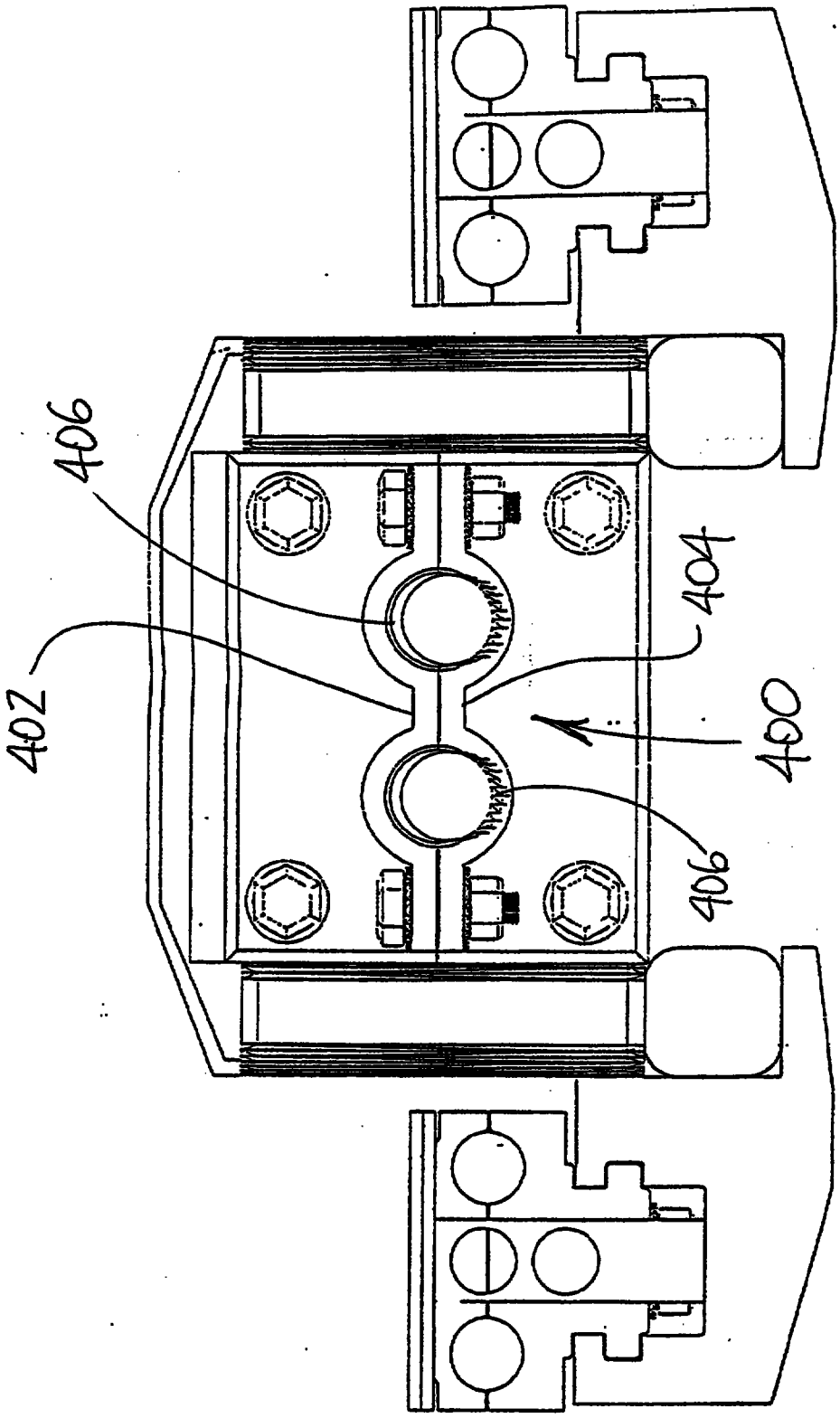

FIG. 11L