FIG. 1

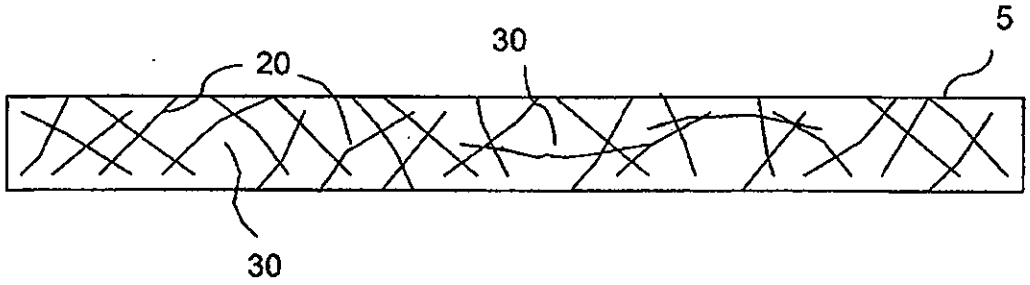

FIG. 2

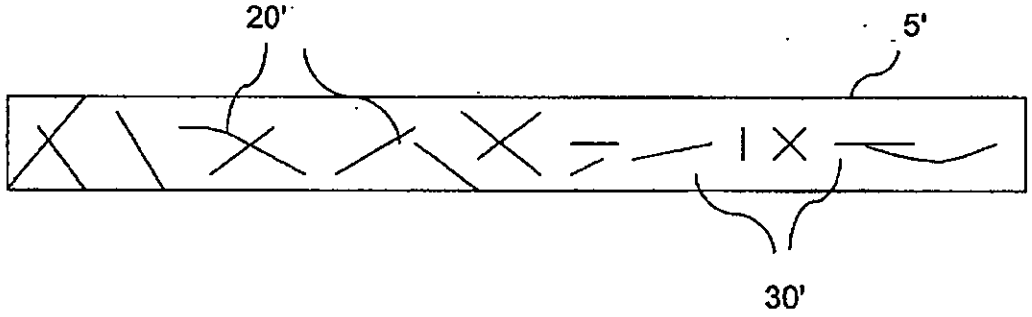

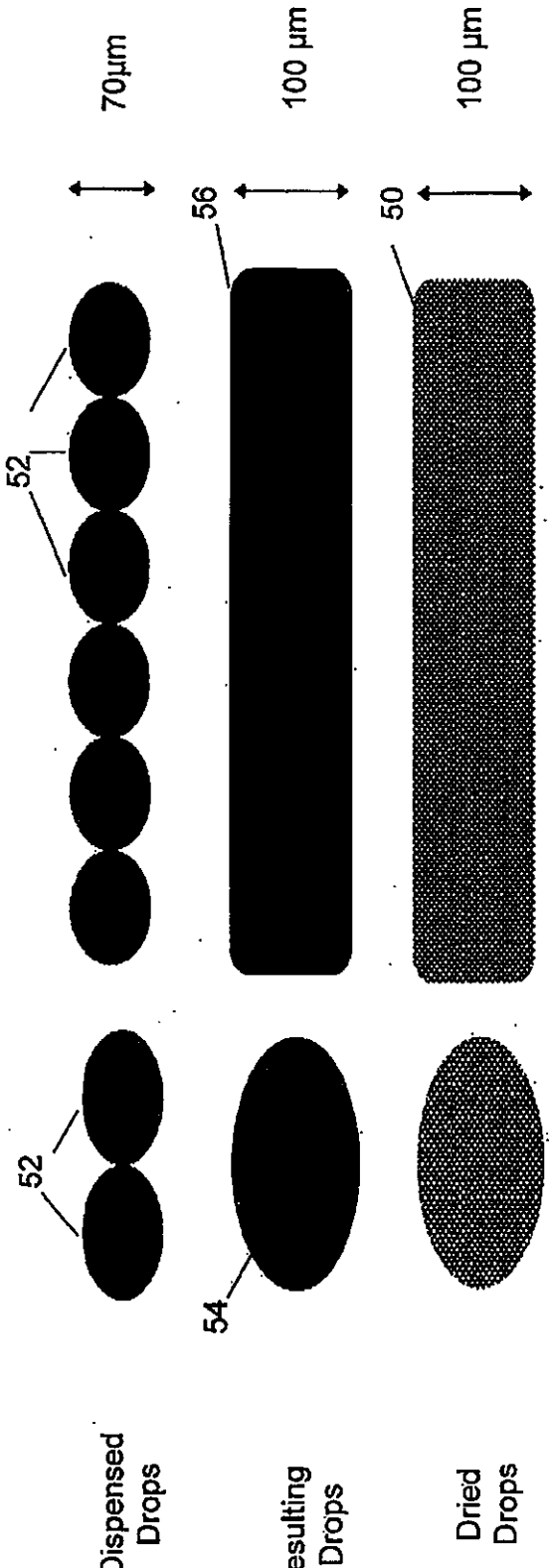
70µm
100 µm
100 µm
56
50
52
52
54
Dispensed Drops
Resulting Drops
Dried Drops

FIG 3

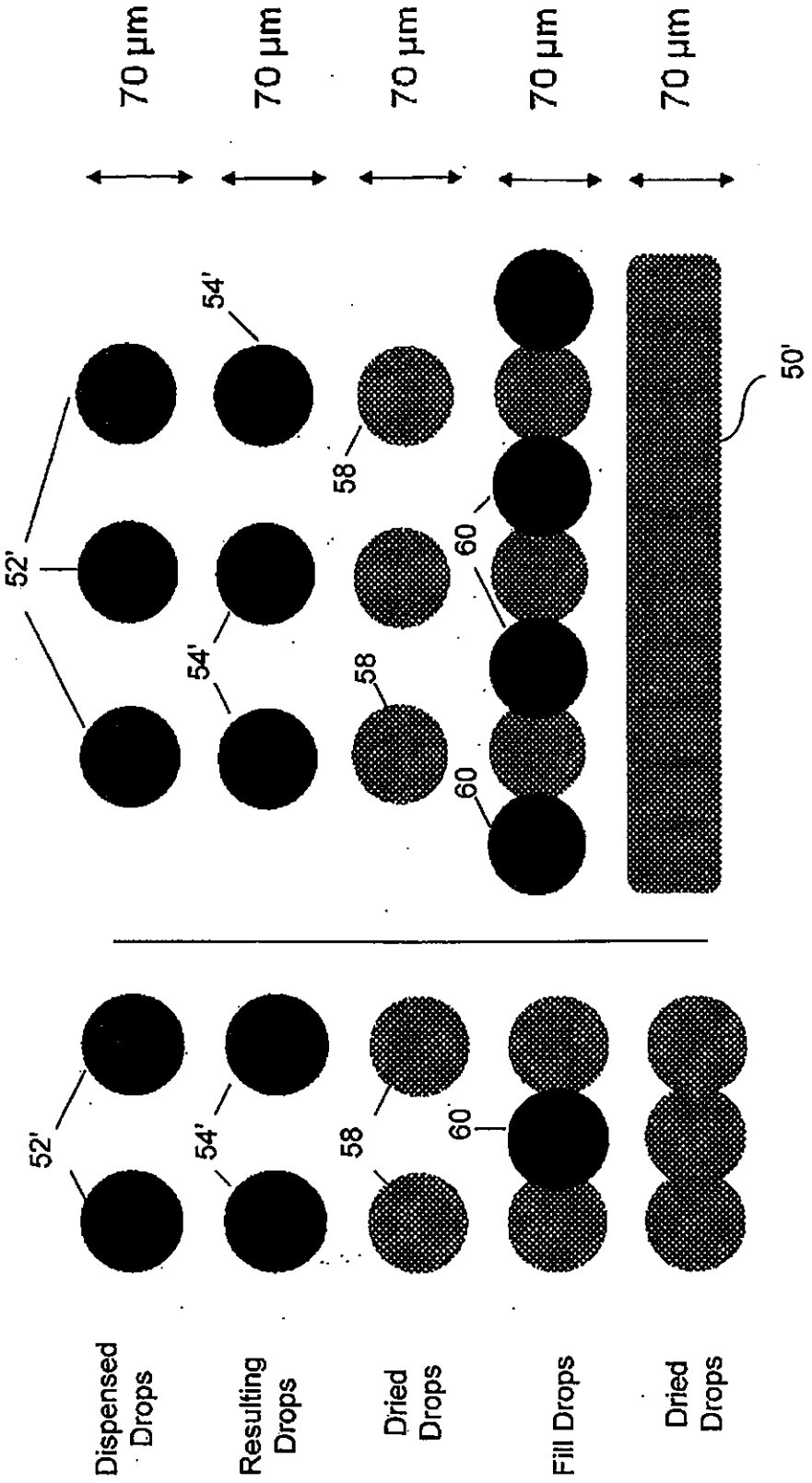
70 µm
70 µm
70 µm
70 µm
70 µm
52'
54'
58
60
50'
Dispensed Drops
Resulting Drops
Dried Drops
Fill Drops
Dried Drops

FIG. 4

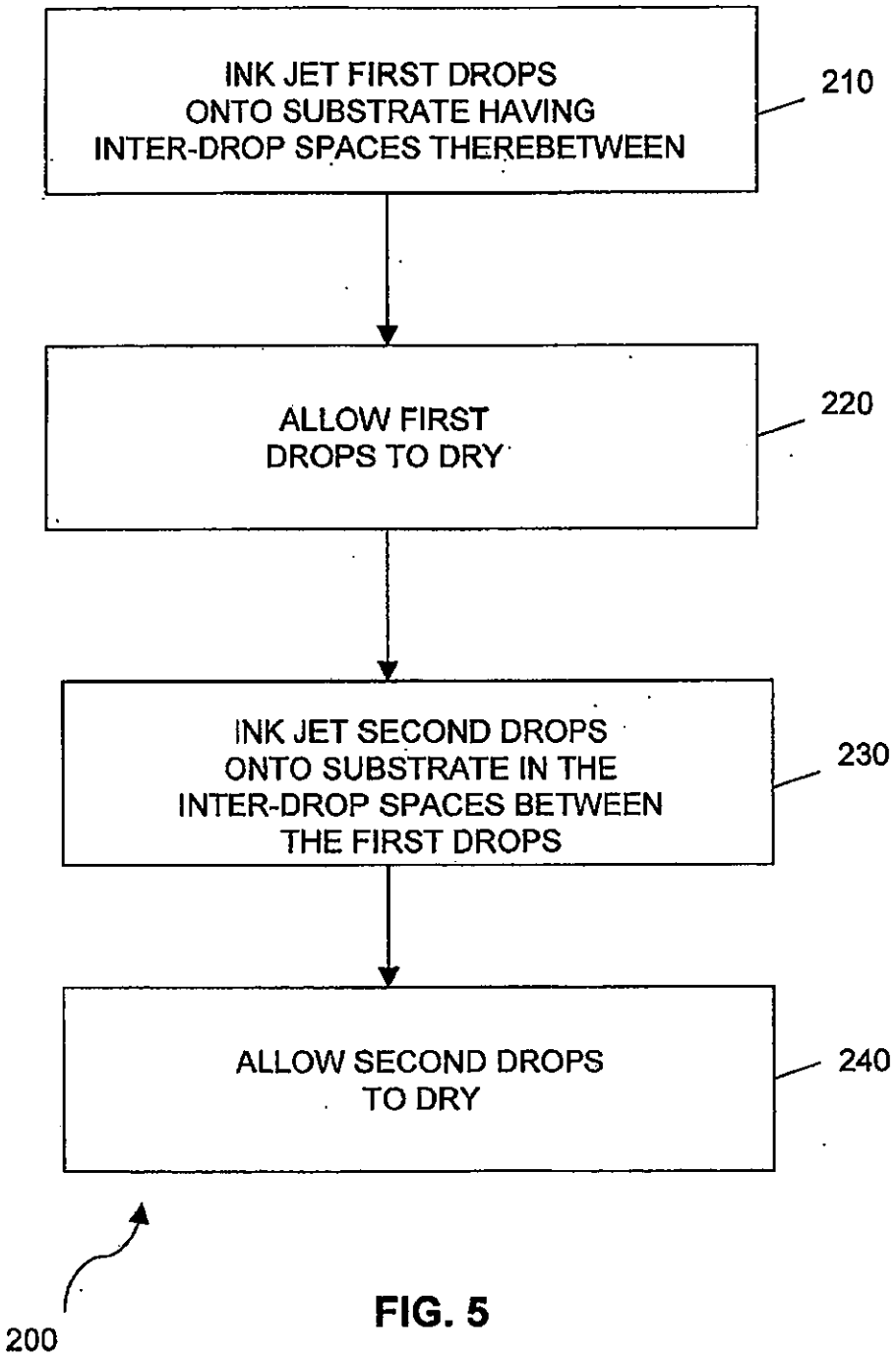
INK JET FIRST DROPS ONTO SUBSTRATE HAVING INTER-DROP SPACES THEREBETWEEN
210
ALLOW FIRST DROPS TO DRY
220
INK JET SECOND DROPS ONTO SUBSTRATE IN THE INTER-DROP SPACES BETWEEN THE FIRST DROPS
230
ALLOW SECOND DROPS TO DRY
240
200

FIG. 5

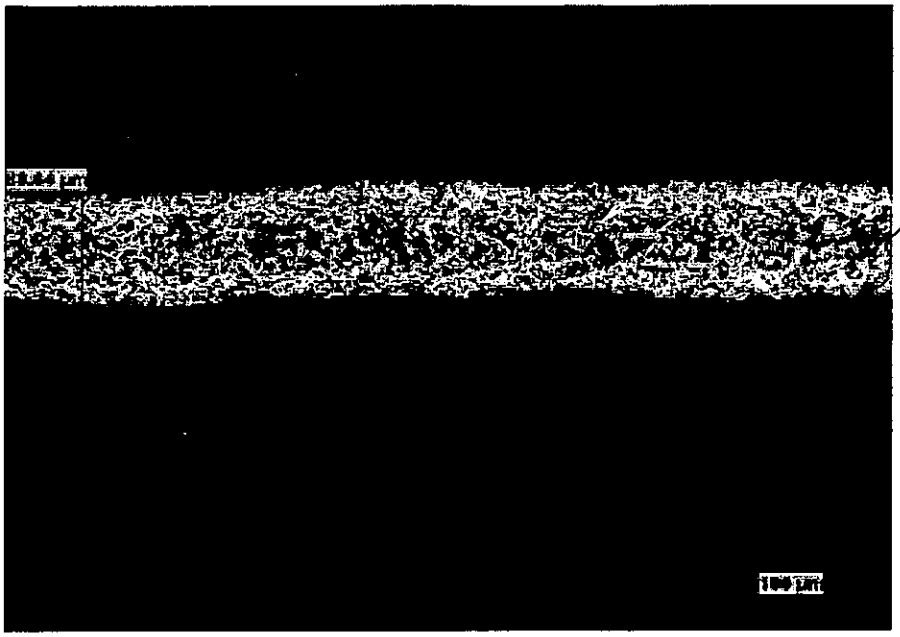

FIG. 6

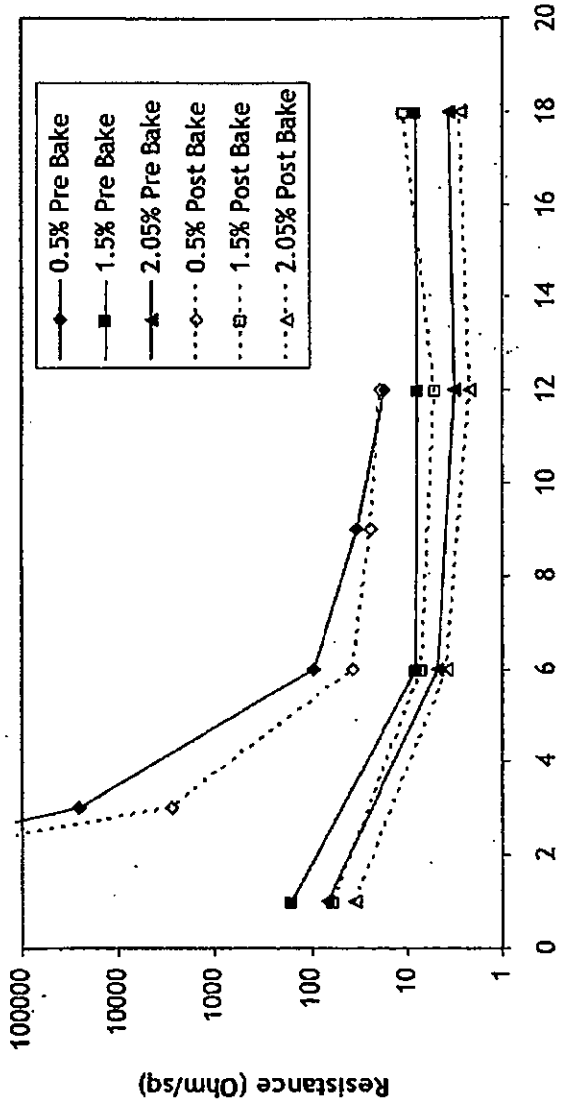
0.5% Pre Bake
1.5% Pre Bake
2.05% Pre Bake
0.5% Post Bake
1.5% Post Bake
2.05% Post Bake
Resistance (Ohm/sq)
100000
10000
1000
100
10
1
0
2
4
6
8
10
12
14
16
18
20
# of Prints

FIG. 7

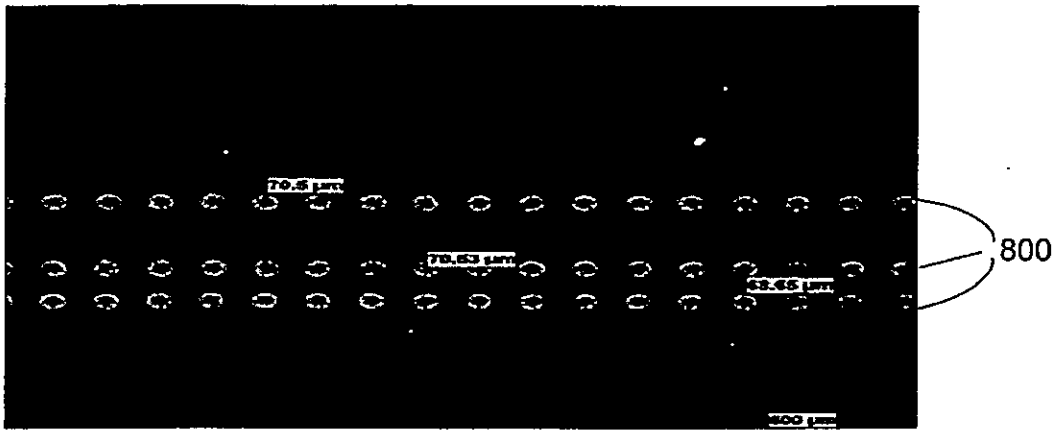

FIG 8A

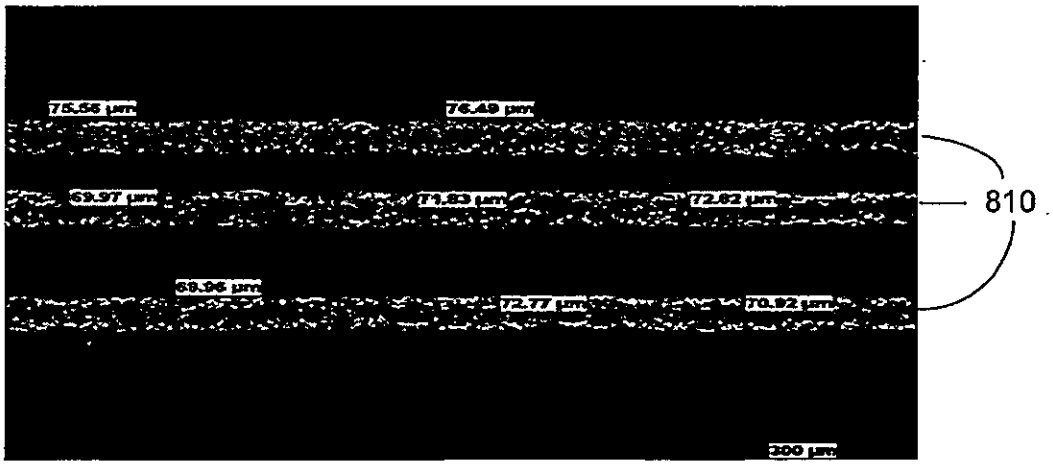

FIG 8B

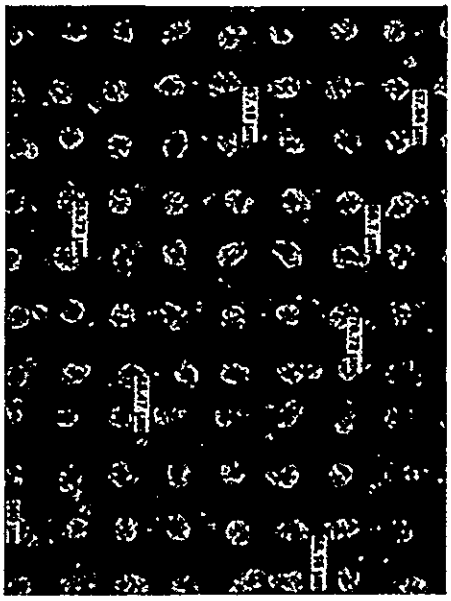

FIG 9A

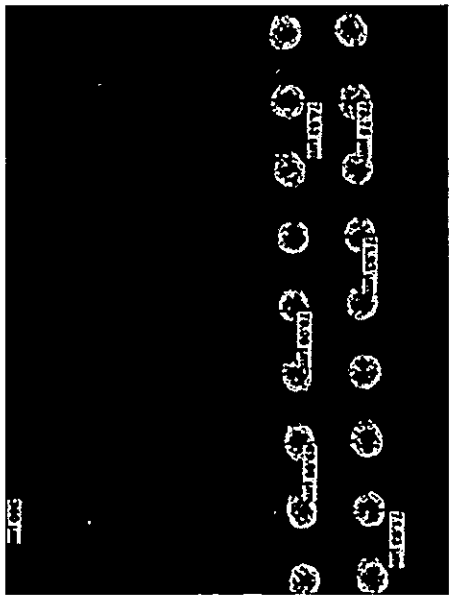

FIG 9B

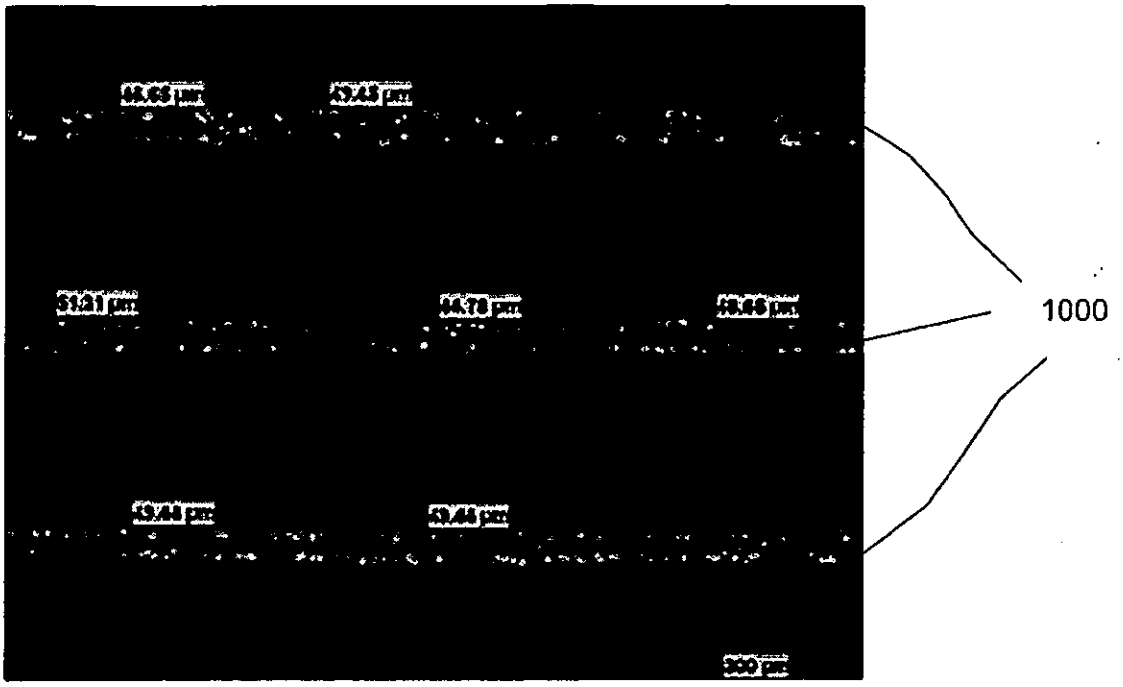

FIG. 10

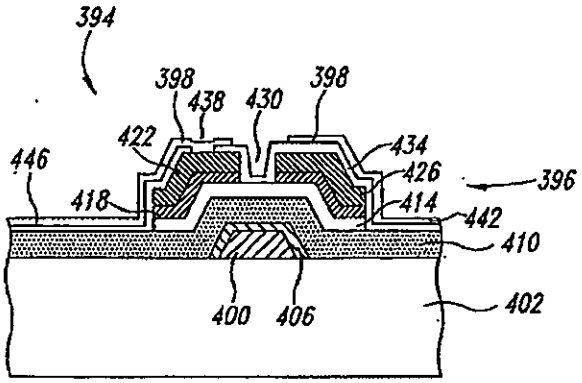
394
398
438
430
398
422
434
446
426
396
418
414
442
410
400
406
402

FIG 11

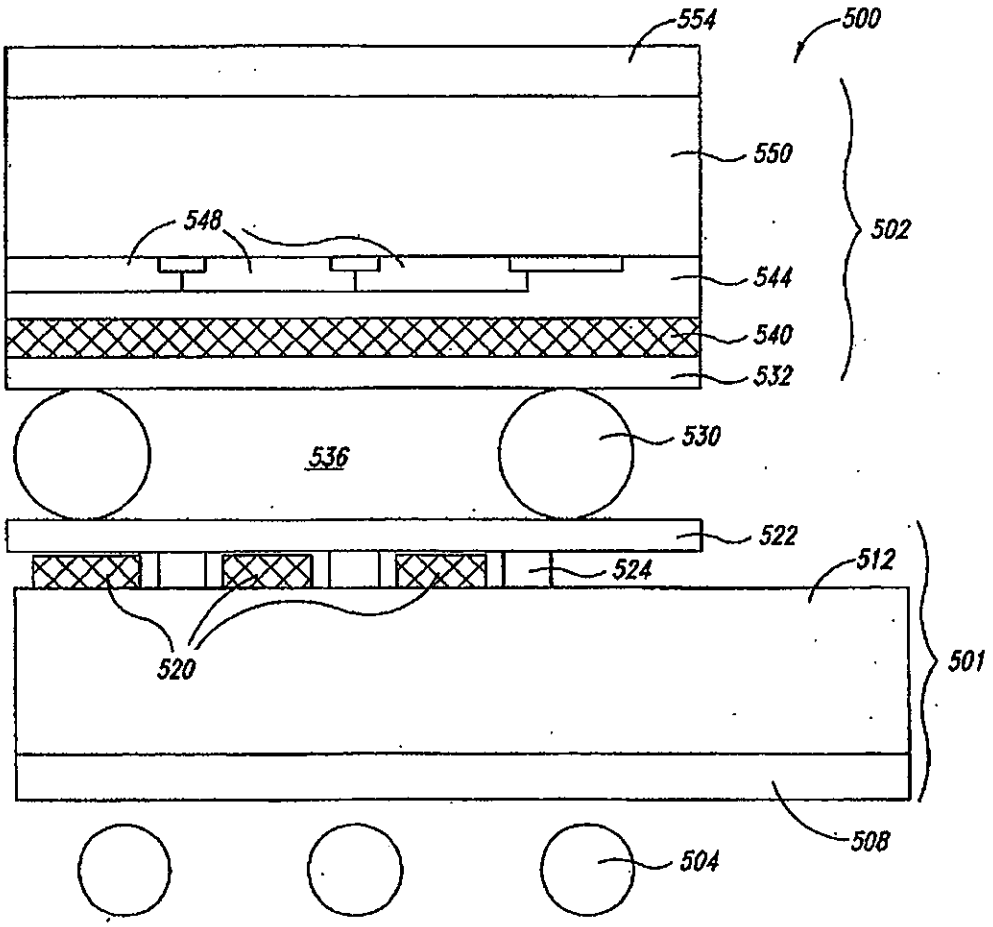
554
500
550
548
502
544
540
532
536
530
522
524
512
520
501
508
504

FIG 12

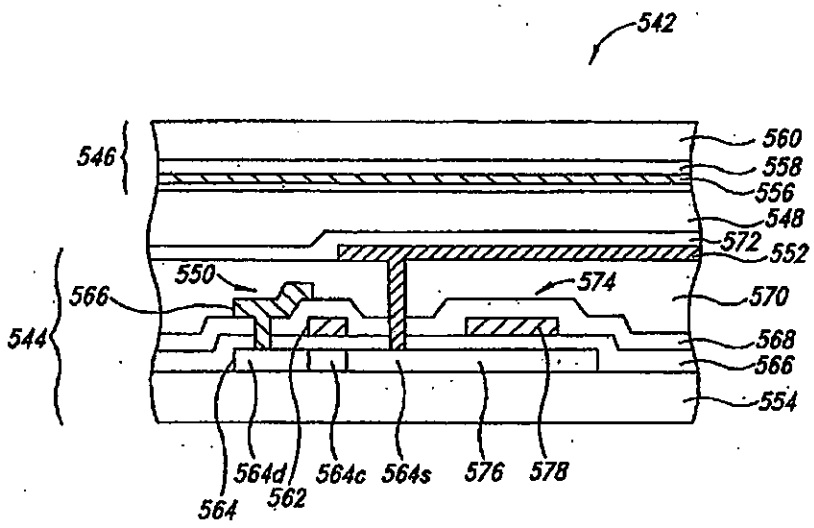
542
546
560
558
556
548
572
552
550
574
566
570
544
568
566
554
564
564d
562
564c
564s
576
578

FIG. 13

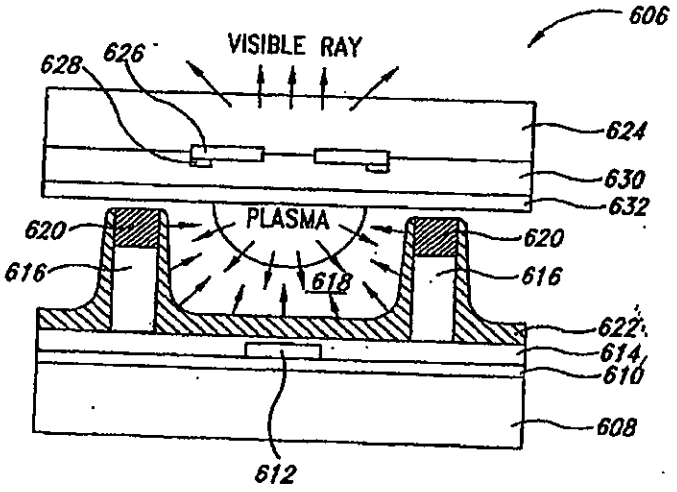
606
VISIBLE RAY
628
626
624
630
632
PLASMA
620
620
616
616
618
622
614
610
608
612

FIG. 14

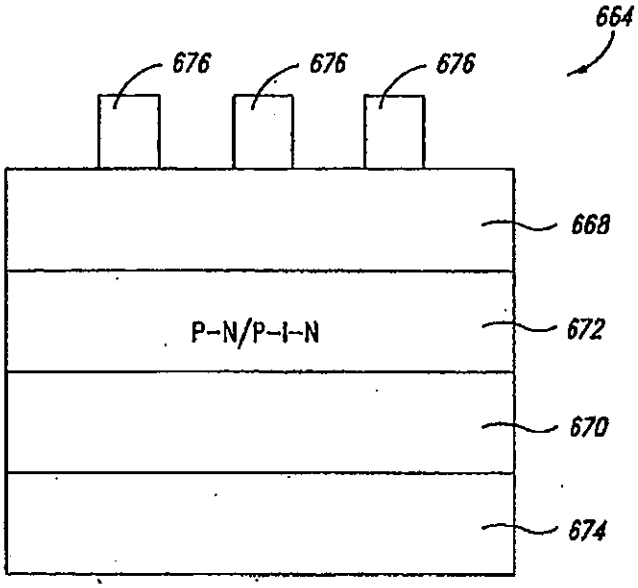
664
676
676
676
668
P-N/P-I-N
672
670
674

FIG. 15

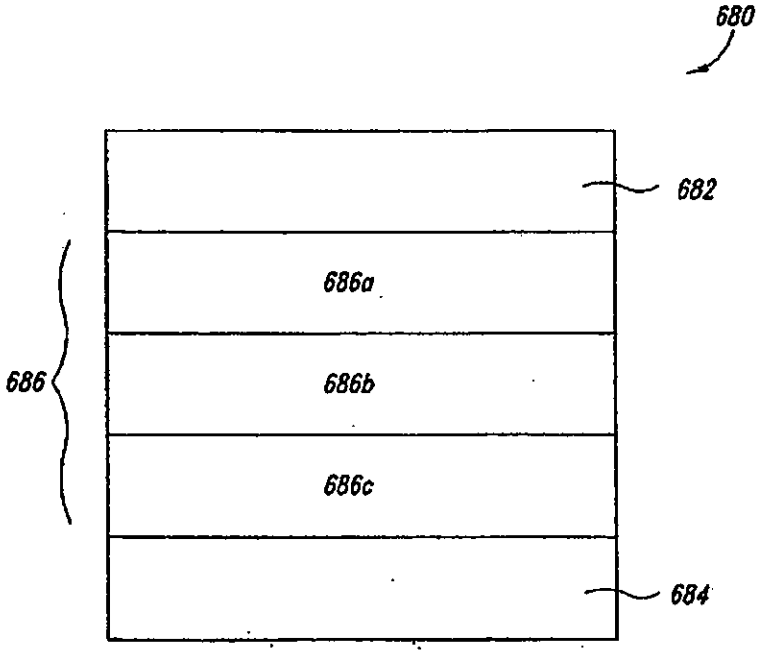
680
682
686a
686
686b
686c
684

FIG. 16

FIG. 17

