Fig.1

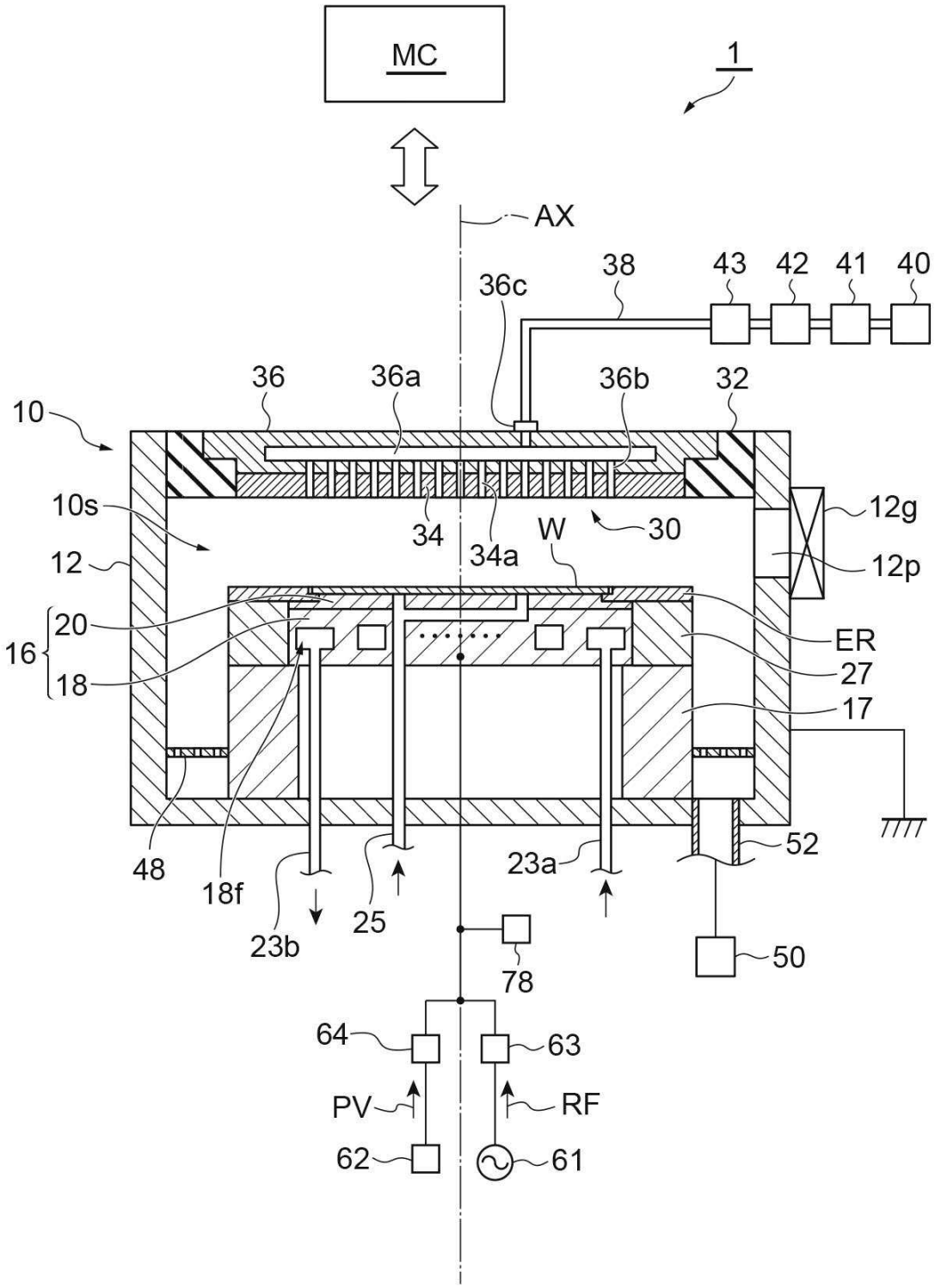
MC
1
AX
38
43
42
41
40
36c
36
36a
36b
32
10
10s
34
34a
W
30
12g
12
12p
16
20
18
ER
27
17
48
18f
23b
25
23a
52
50
78
64
63
PV
RF
62
61

Fig.2

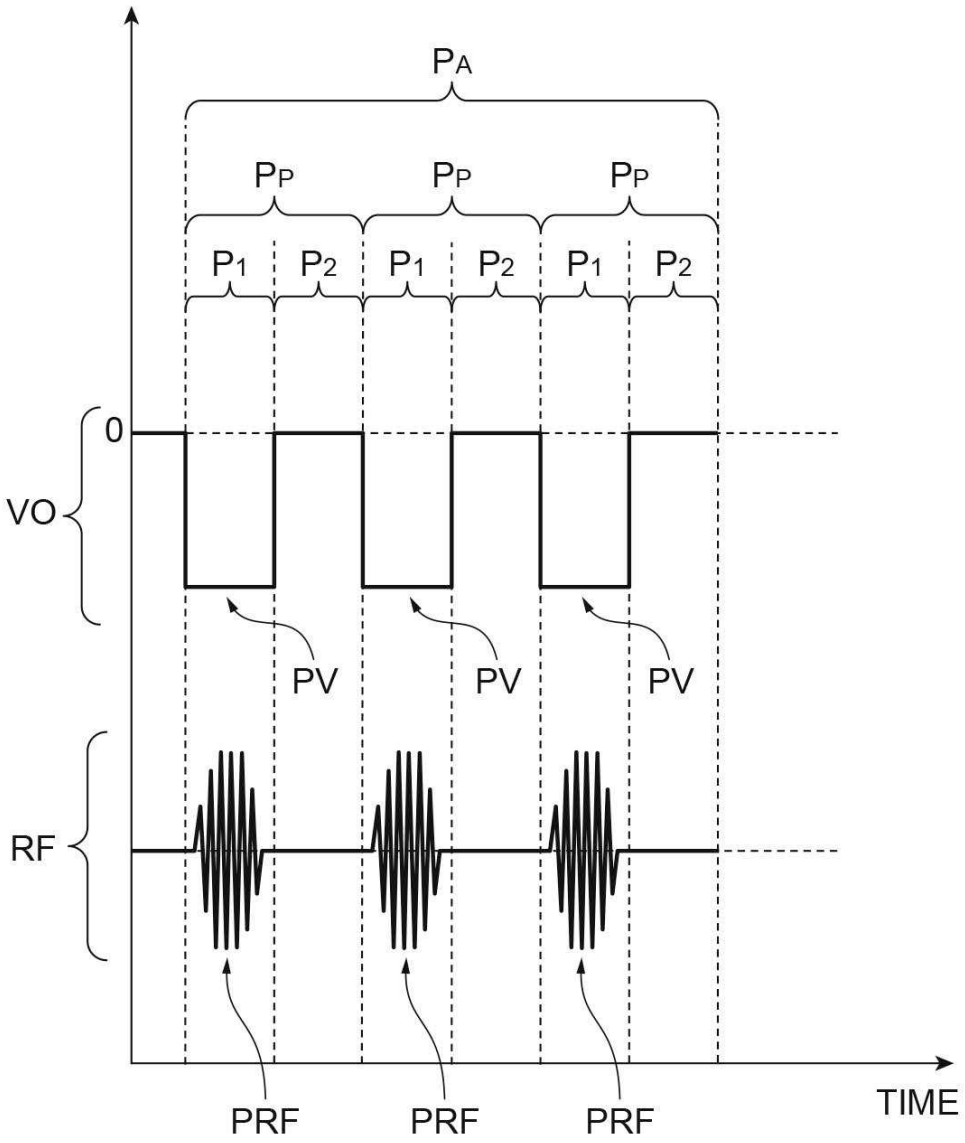

Fig.3

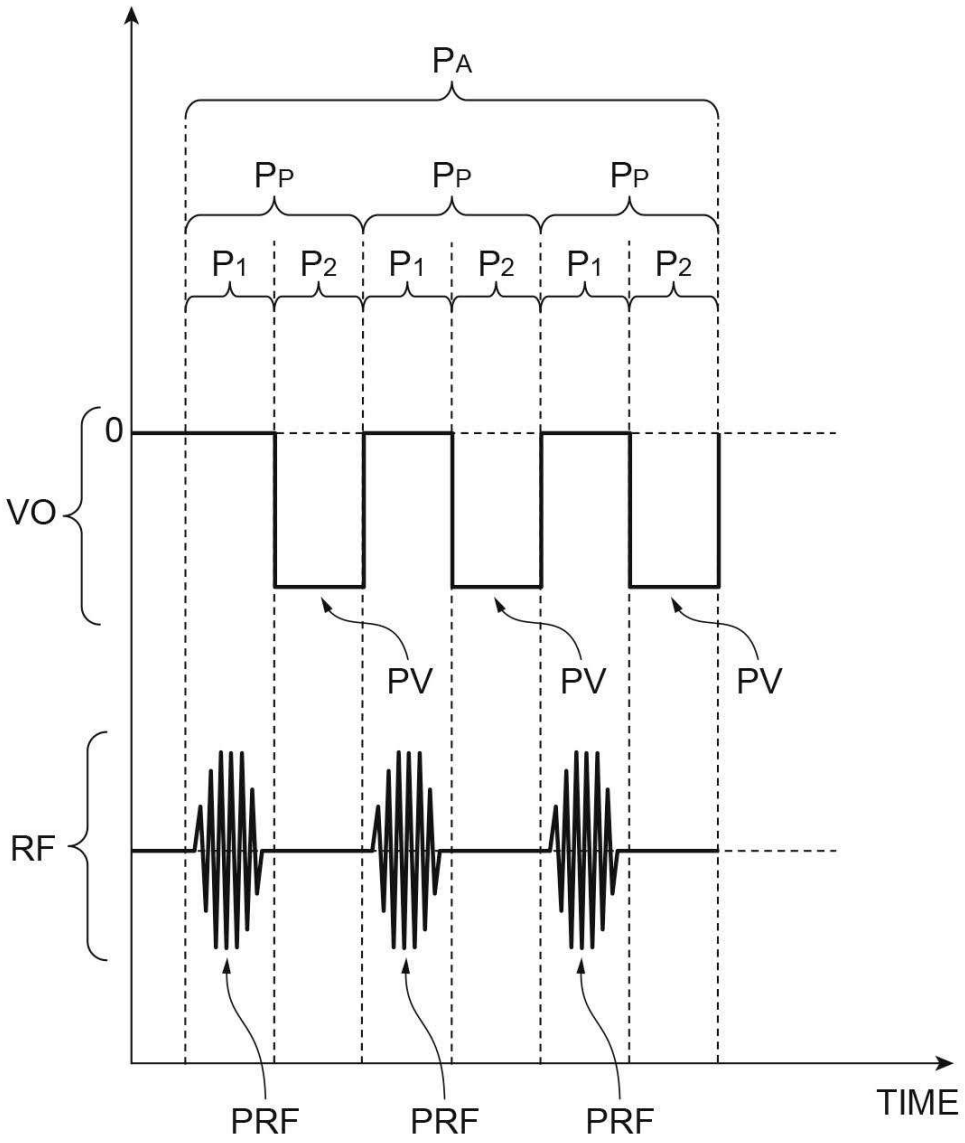

Fig.4

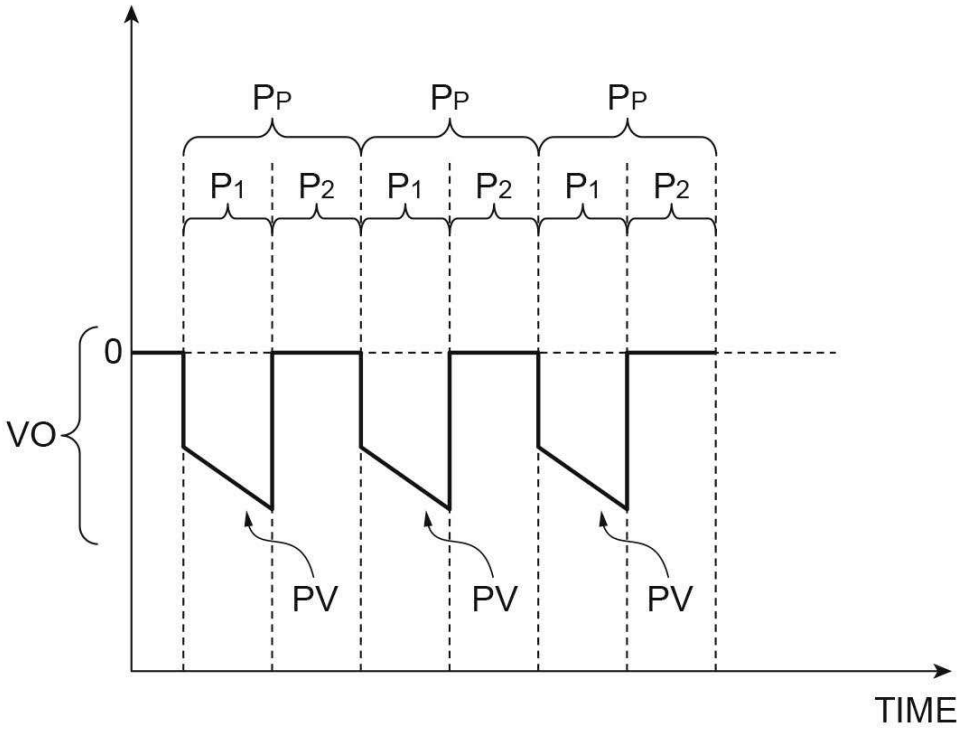

Fig.5

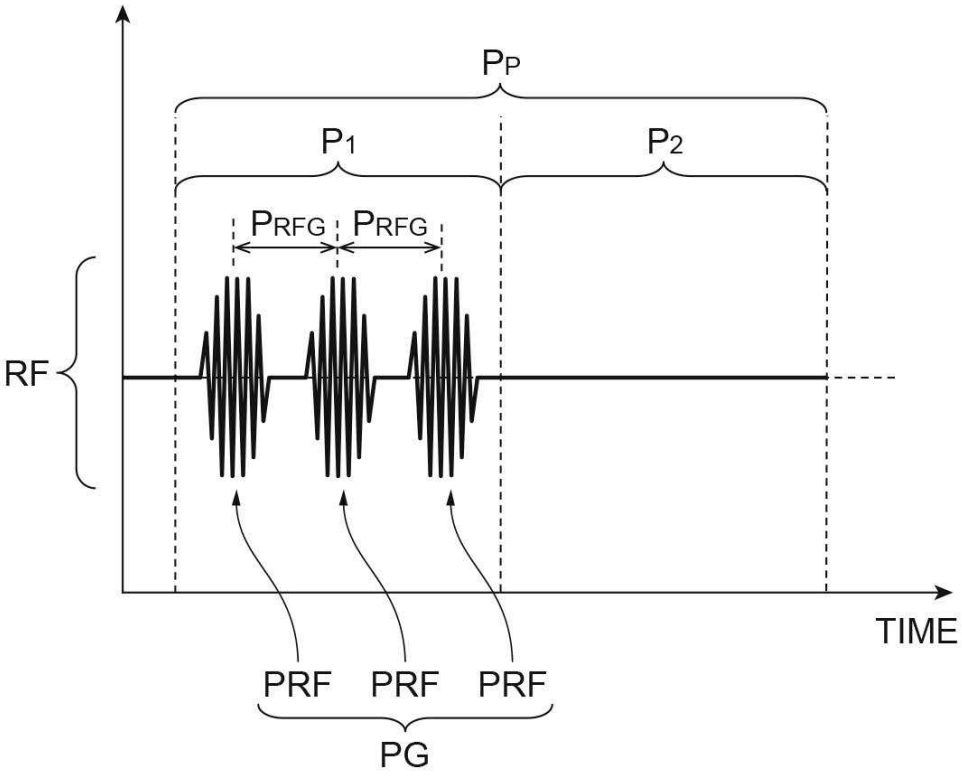

Fig.6

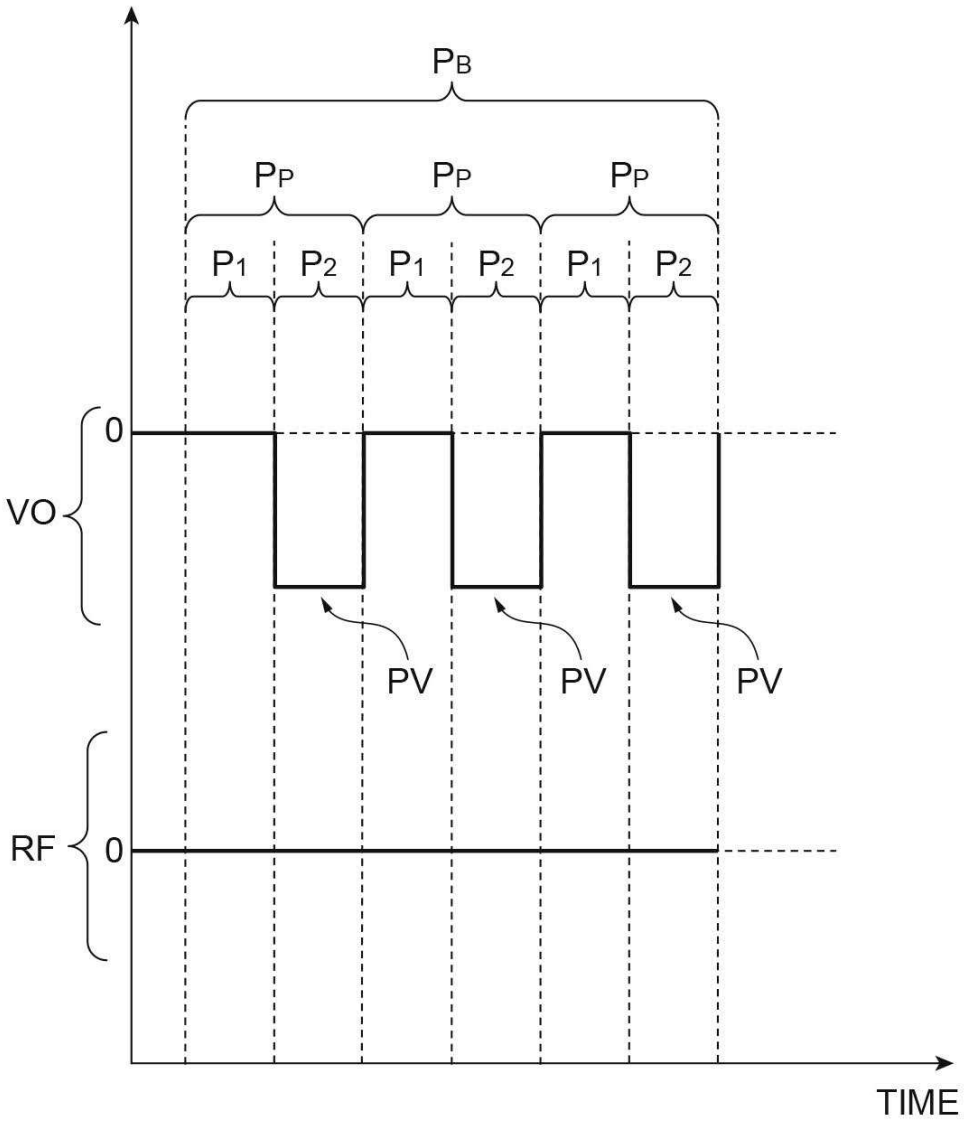

Fig.7

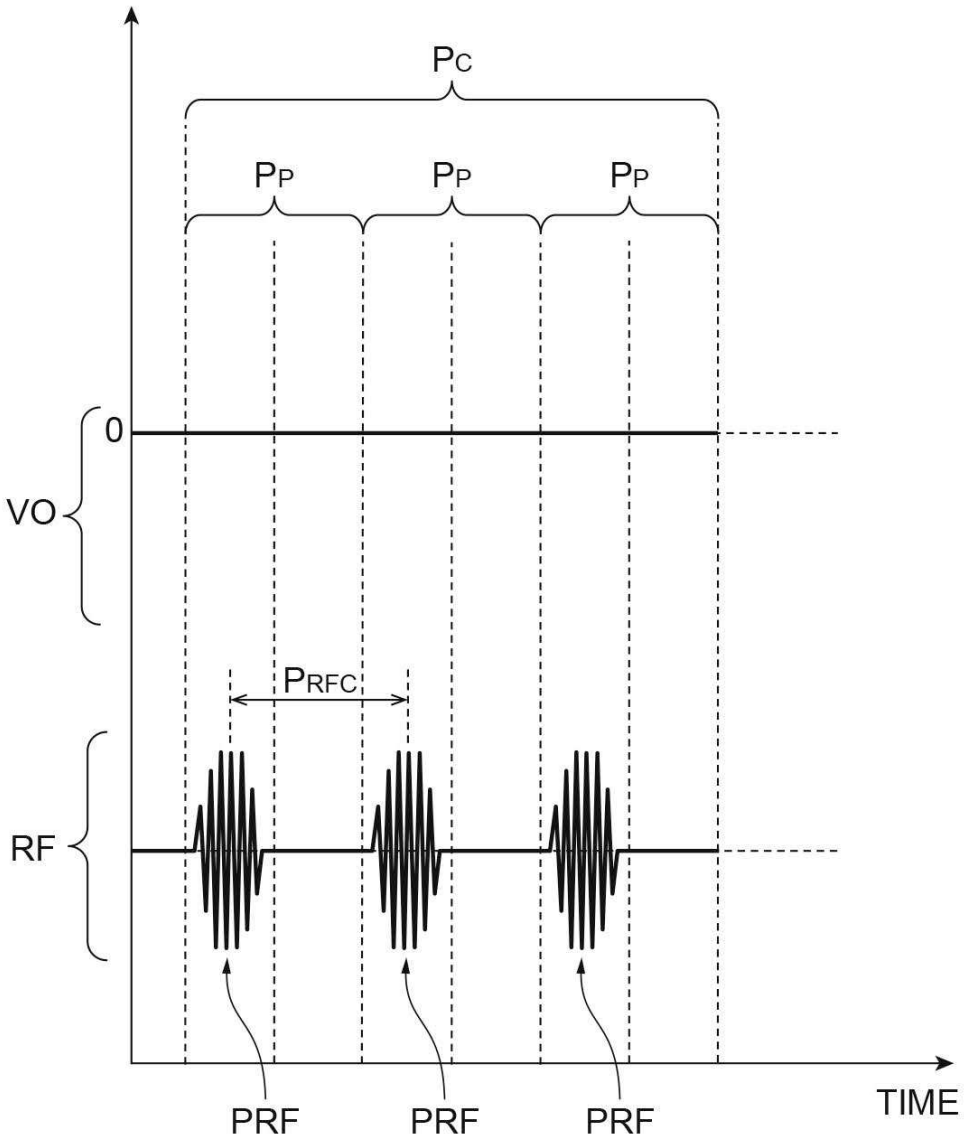

Fig.8A

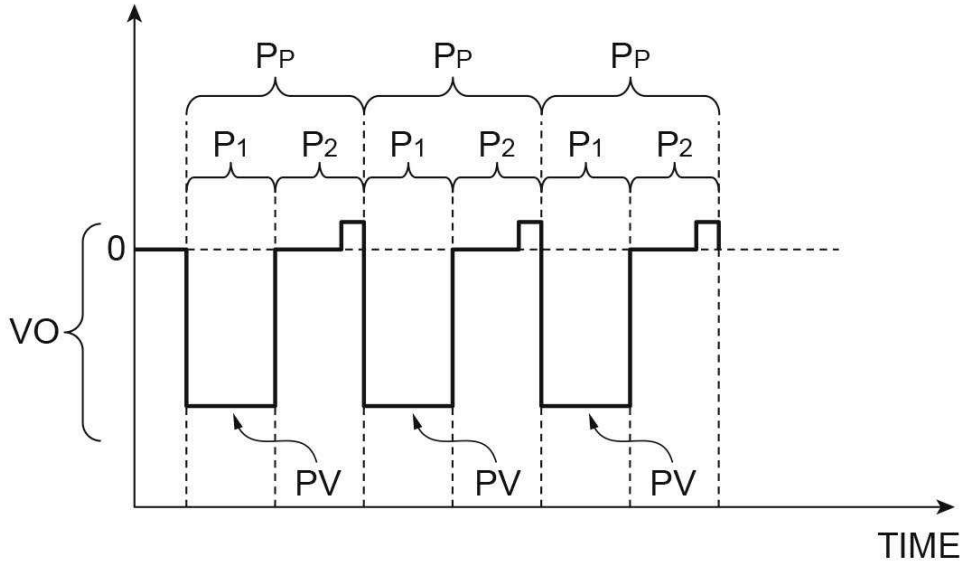
PP
PP
PP
P1
P2
P1
P2
P1
P2
0
VO
PV
PV
PV
TIME

Fig.8B

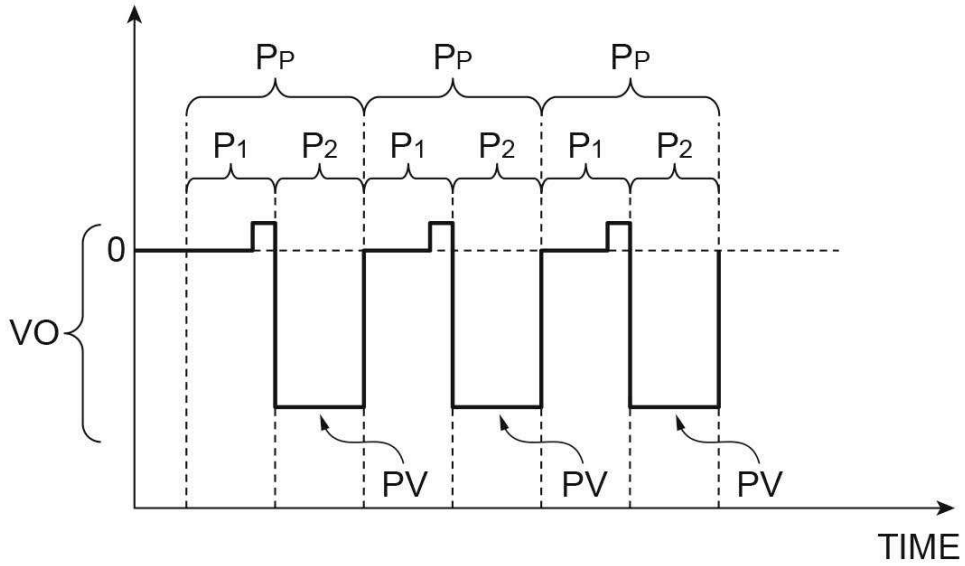
PP
PP
PP
P1
P2
P1
P2
P1
P2
0
VO
PV
PV
PV
TIME

Fig.9

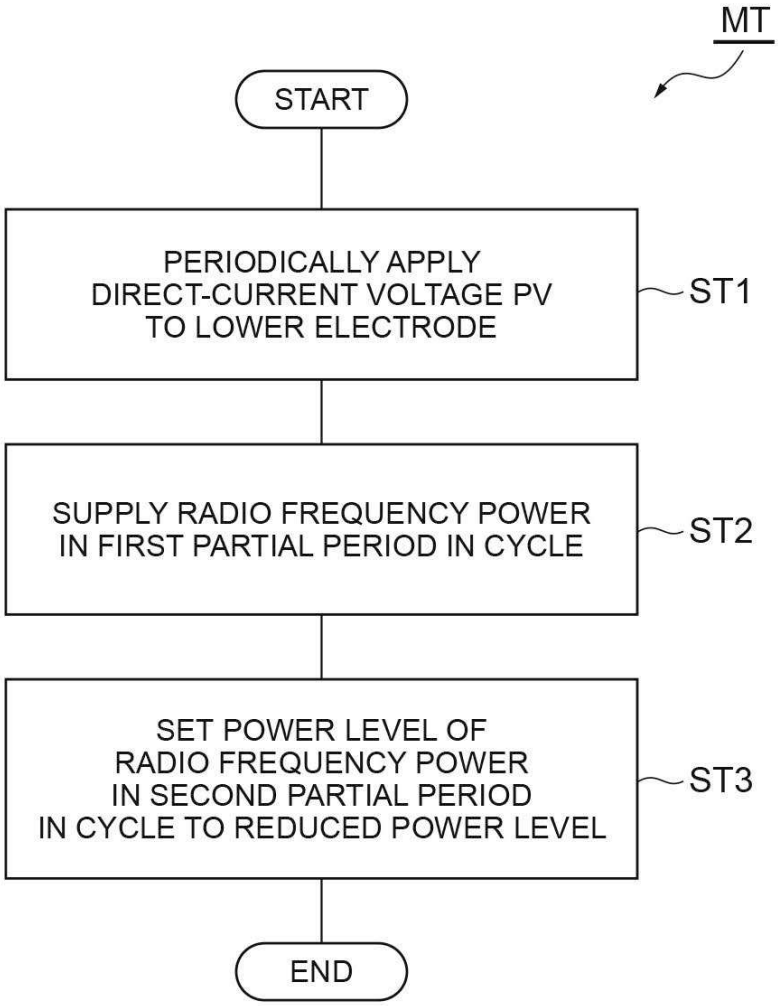
MT
START
PERIODICALLY APPLY DIRECT-CURRENT VOLTAGE PV TO LOWER ELECTRODE
ST1
SUPPLY RADIO FREQUENCY POWER IN FIRST PARTIAL PERIOD IN CYCLE
ST2
SET POWER LEVEL OF RADIO FREQUENCY POWER IN SECOND PARTIAL PERIOD IN CYCLE TO REDUCED POWER LEVEL
ST3
END