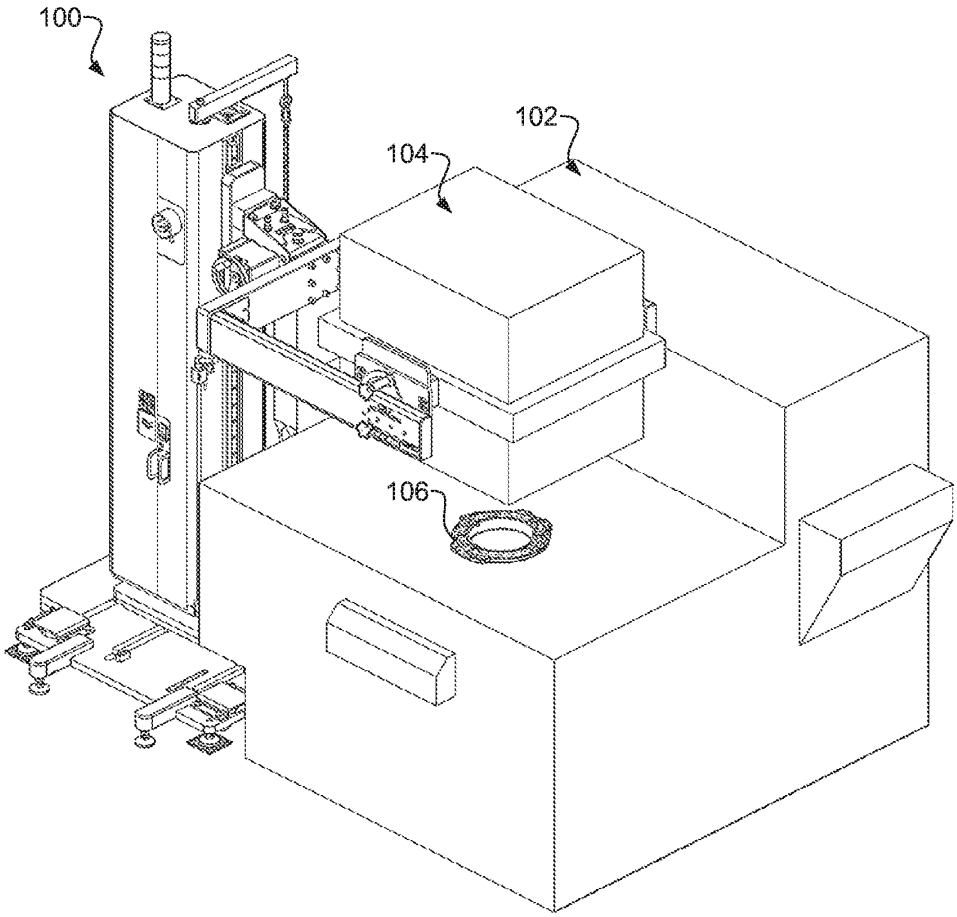


*Fig. 1*

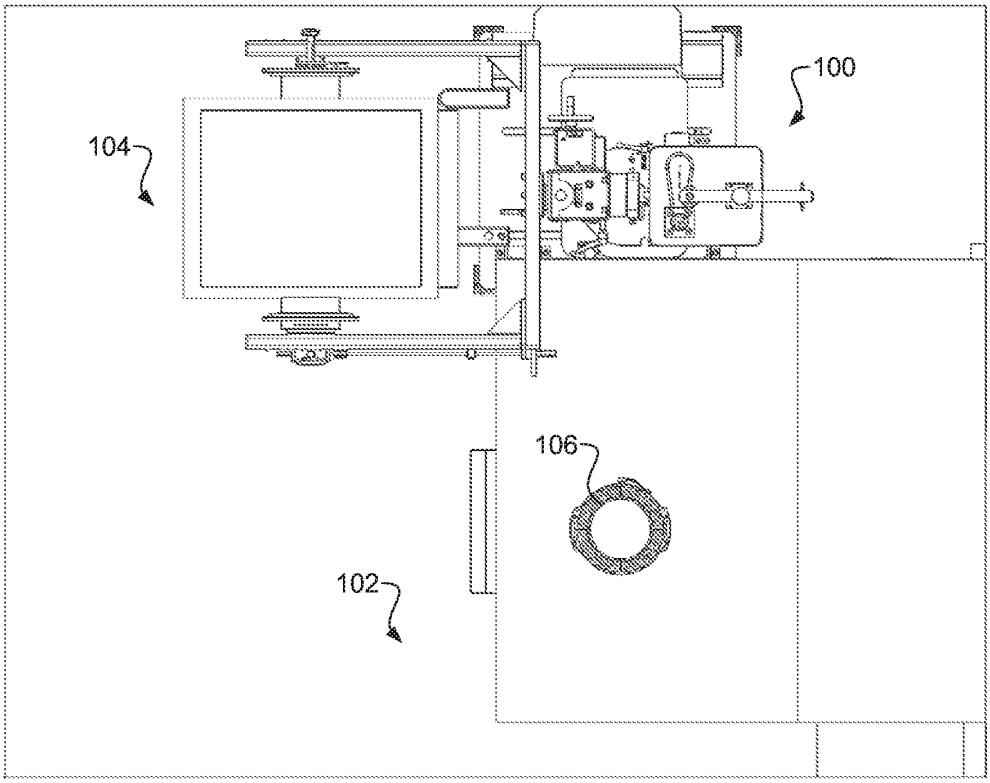


*Fig. 2*

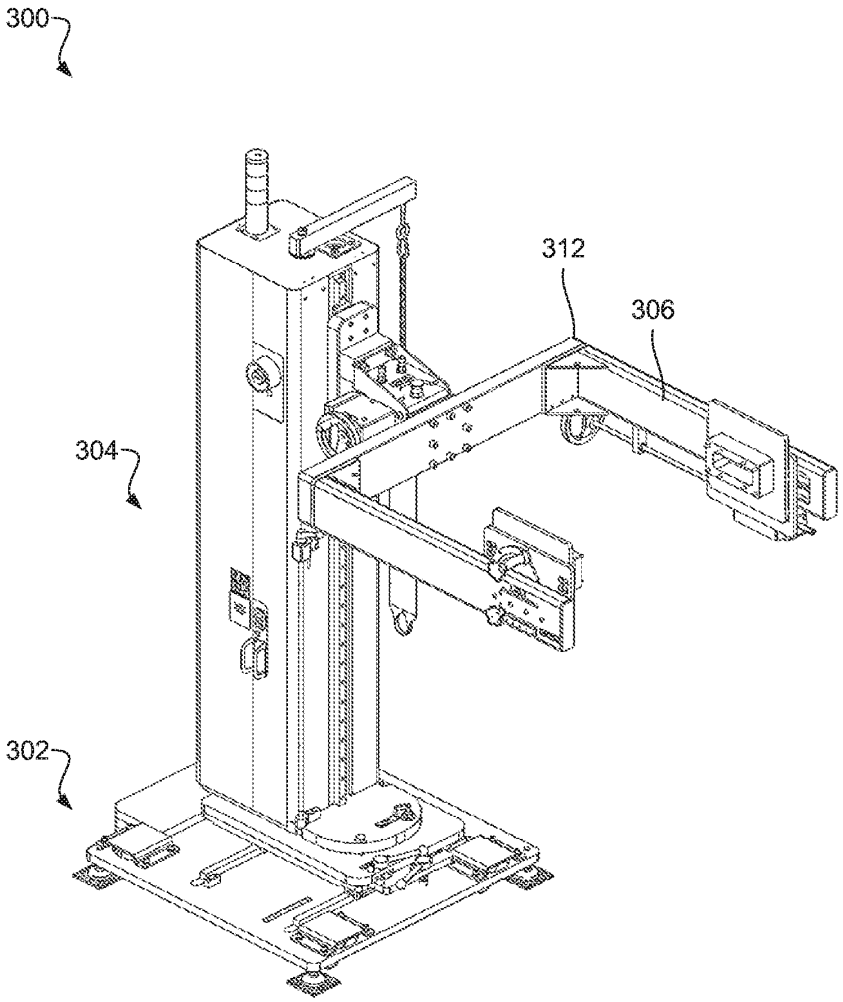


*Fig. 3*

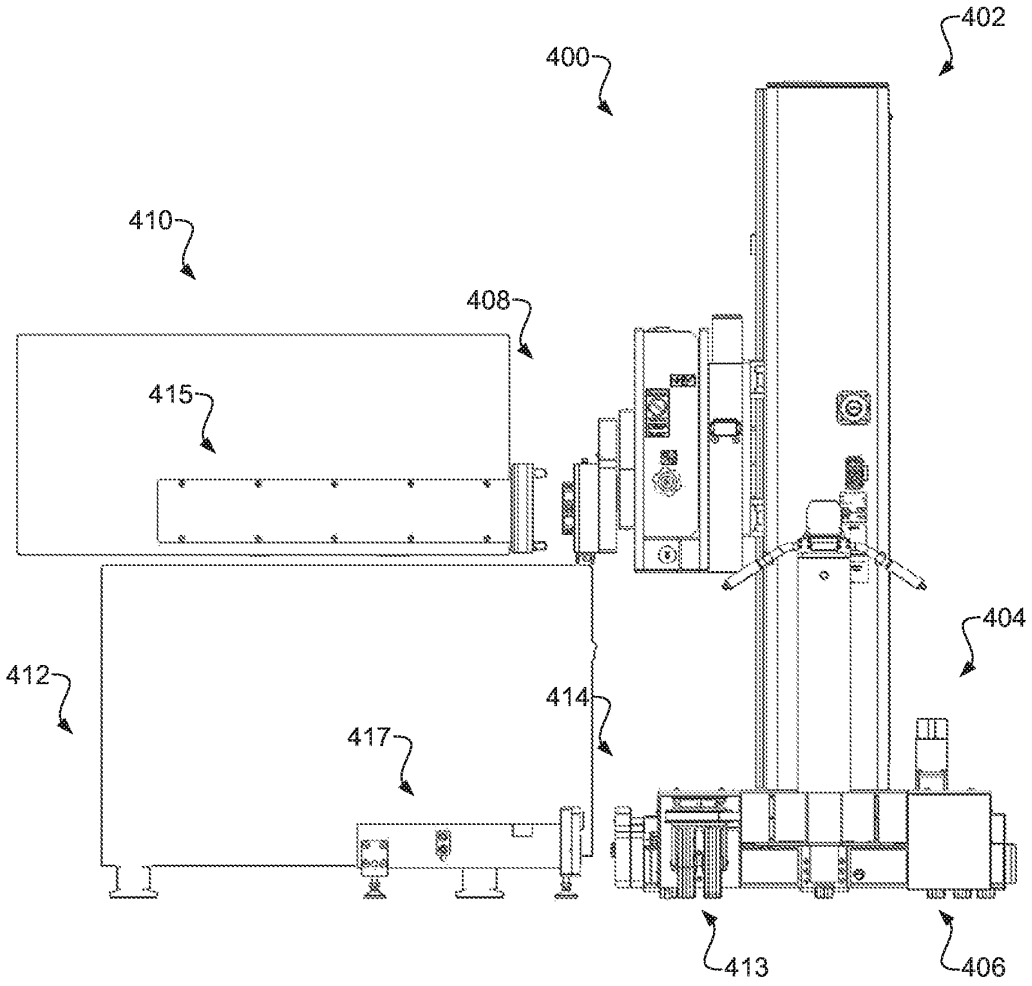


*Fig. 4*

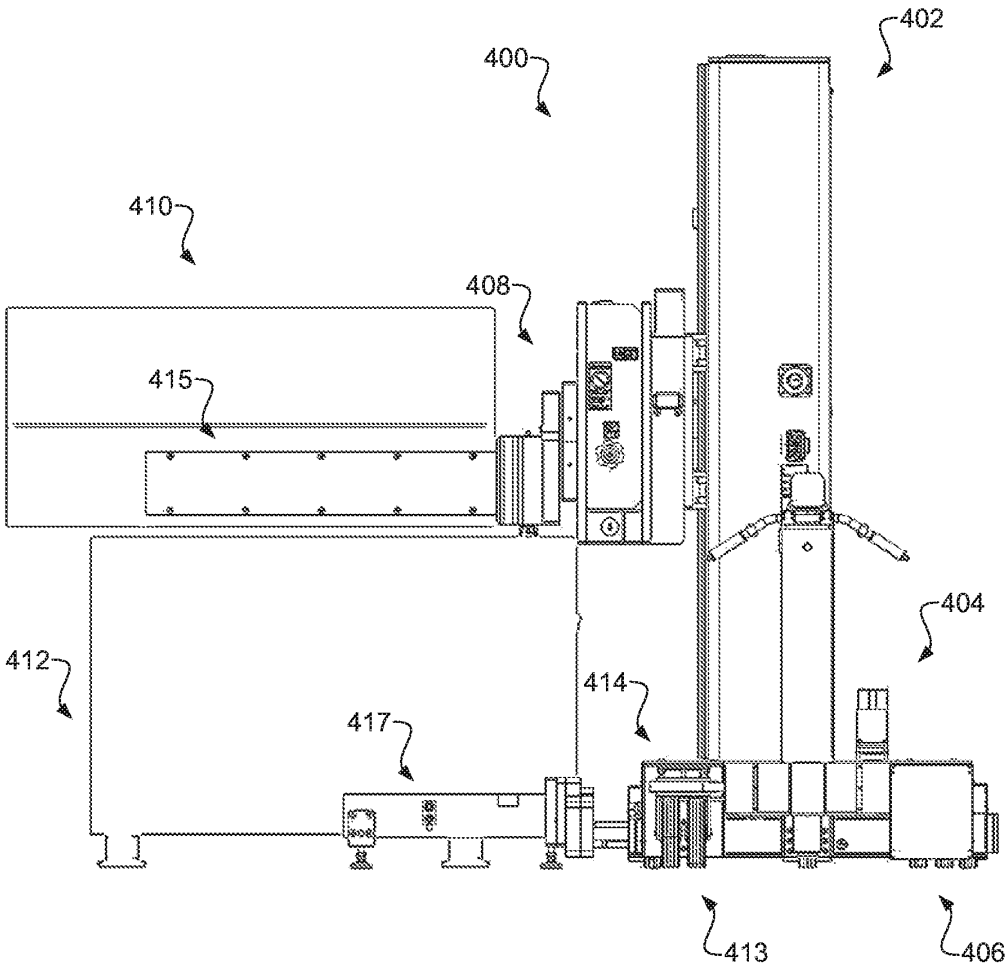


*Fig. 5*

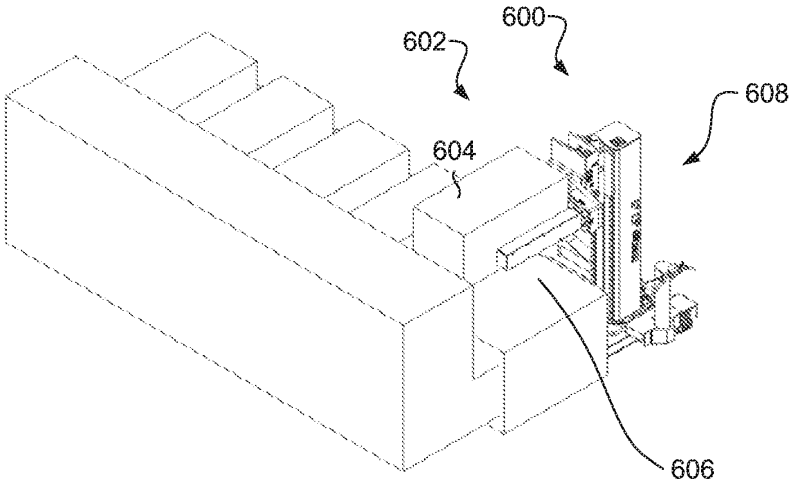


Fig. 6

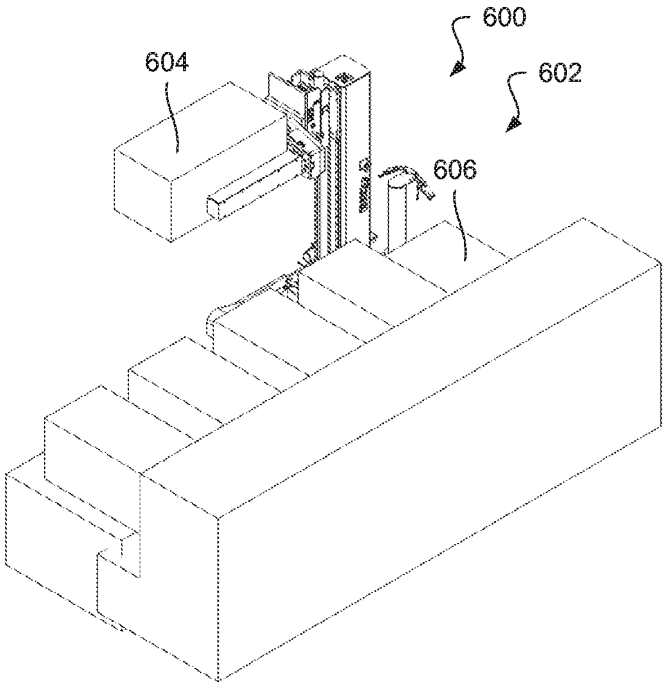


Fig. 7

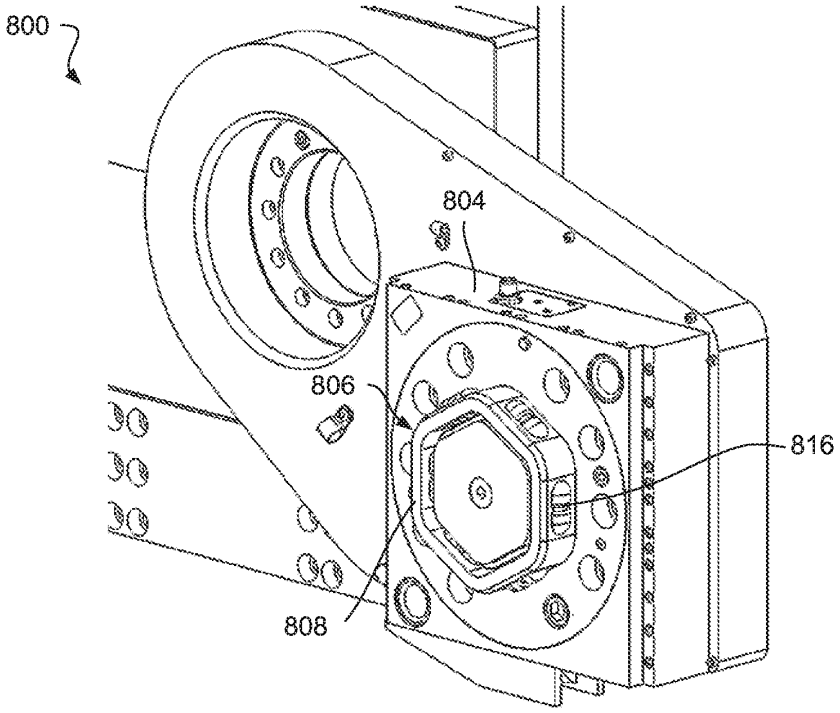


Fig. 8

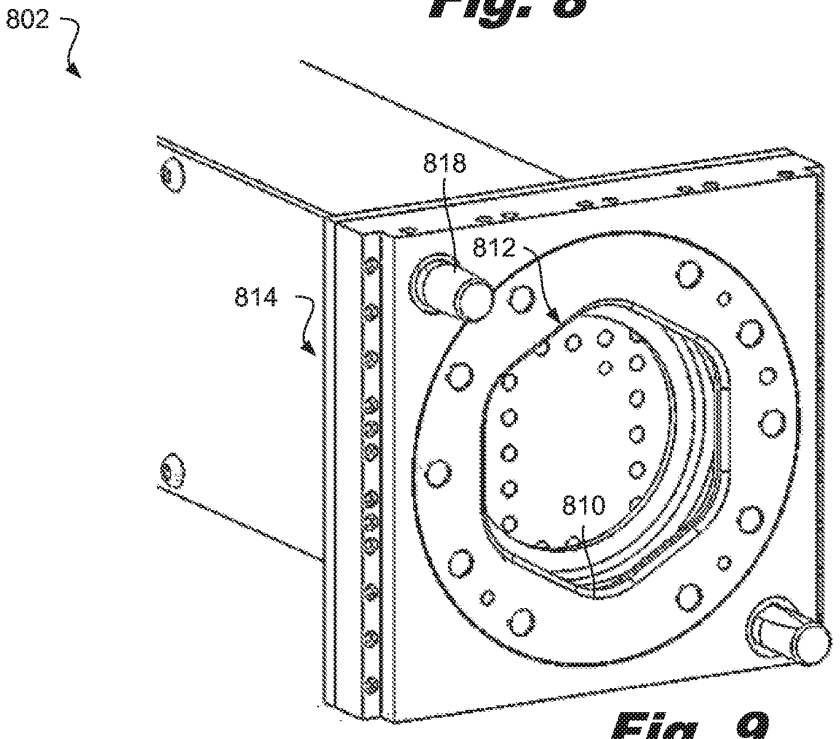


Fig. 9

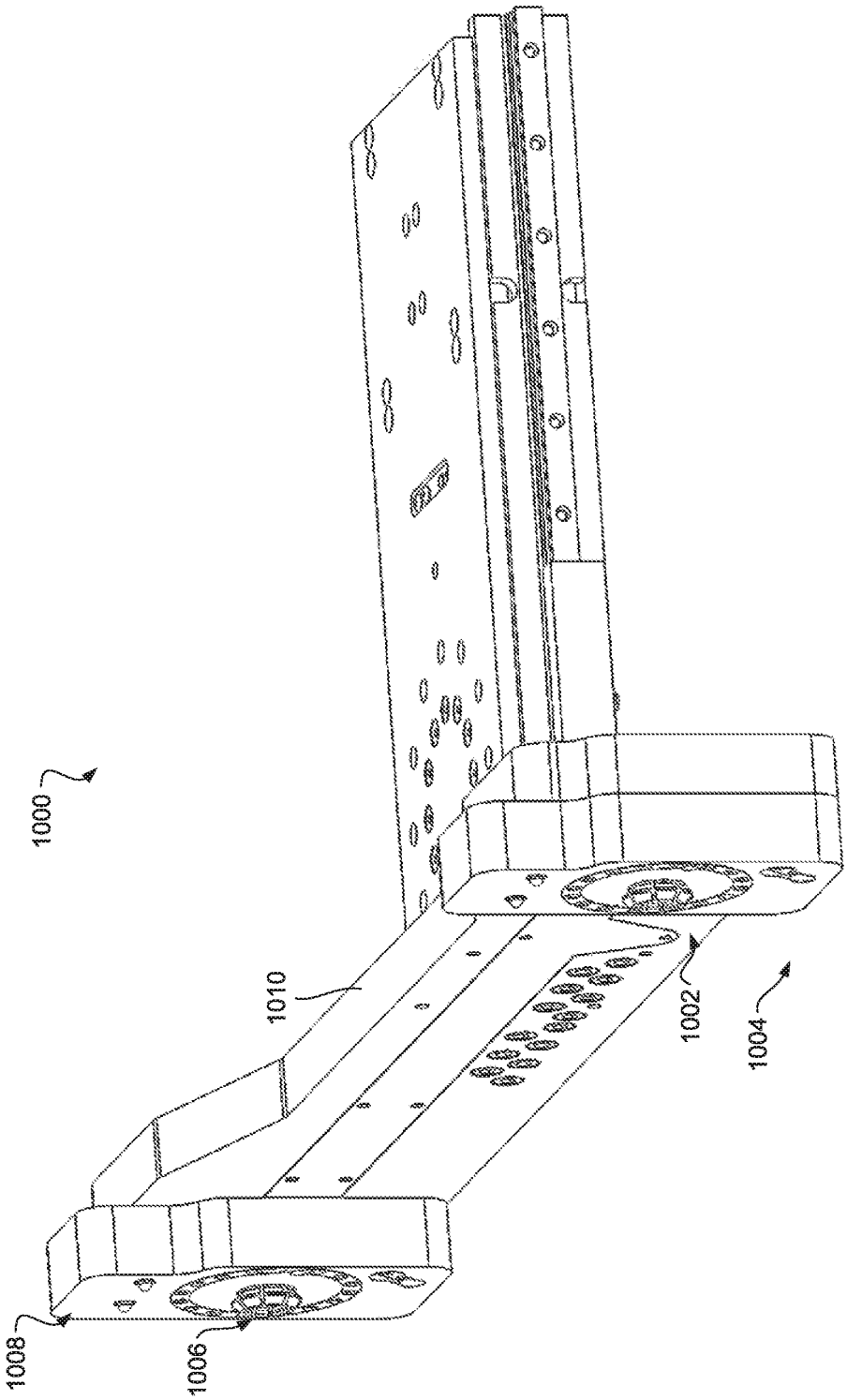


Fig. 10

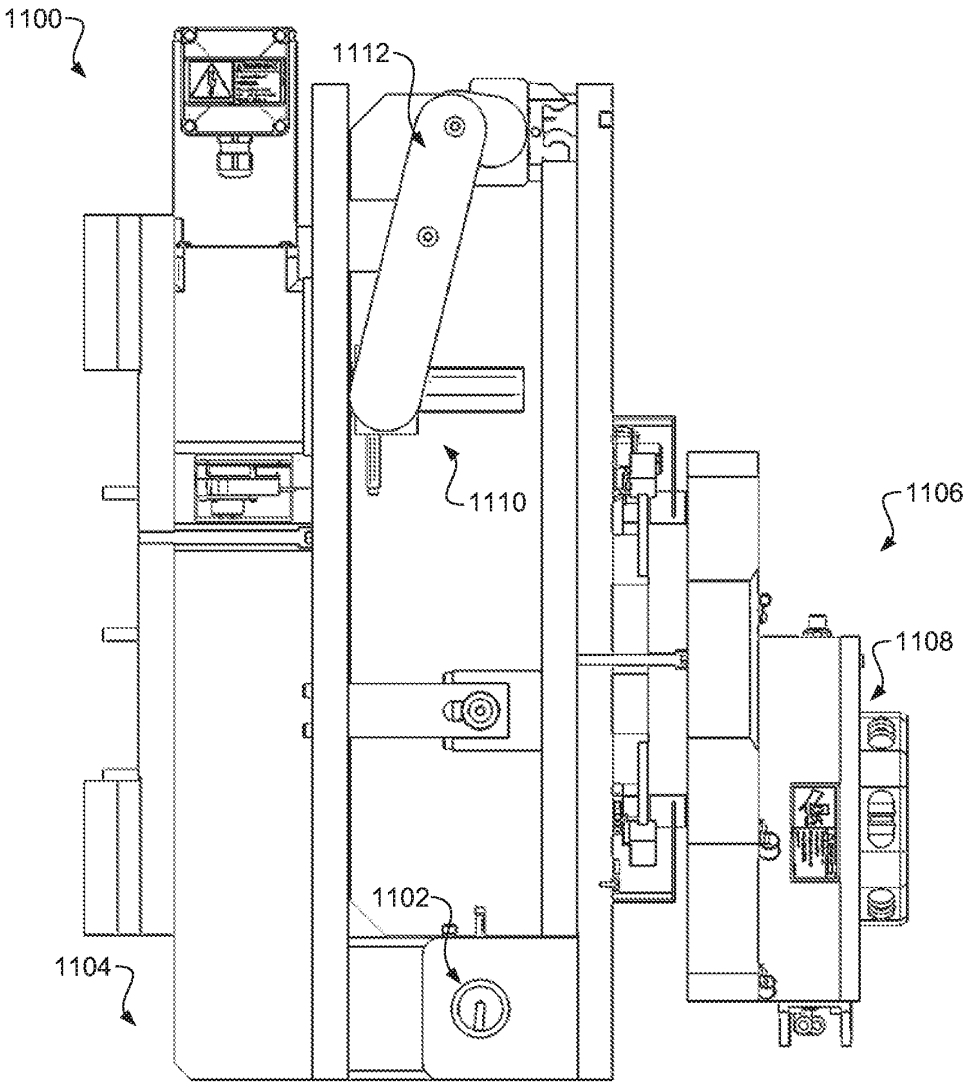


*Fig. 11*

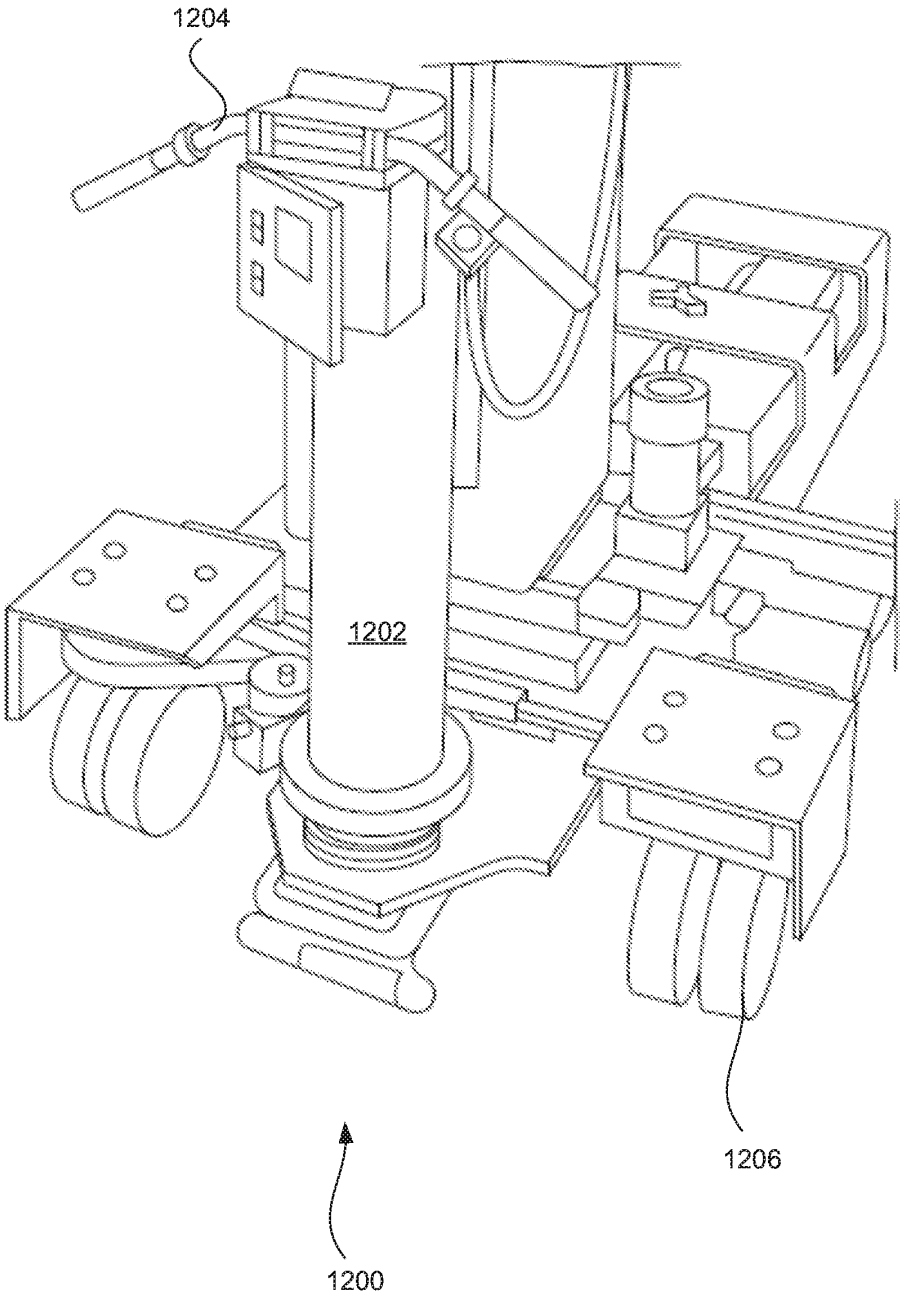


Fig. 12

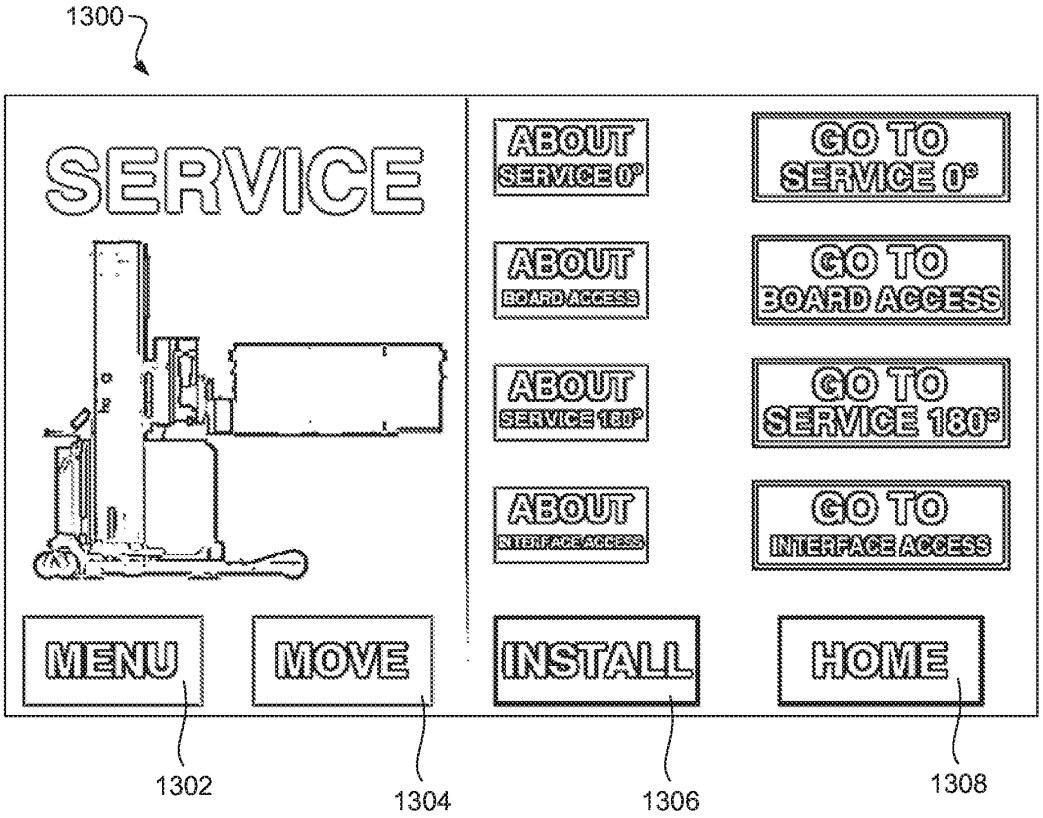
1300
SERVICE
ABOUT SERVICE 0°
GO TO SERVICE 0°
ABOUT BOARD ACCESS
GO TO BOARD ACCESS
ABOUT SERVICE 180°
GO TO SERVICE 180°
ABOUT INTERFACE ACCESS
GO TO INTERFACE ACCESS
MENU
MOVE
INSTALL
HOME
1302
1304
1306
1308

*Fig. 13*

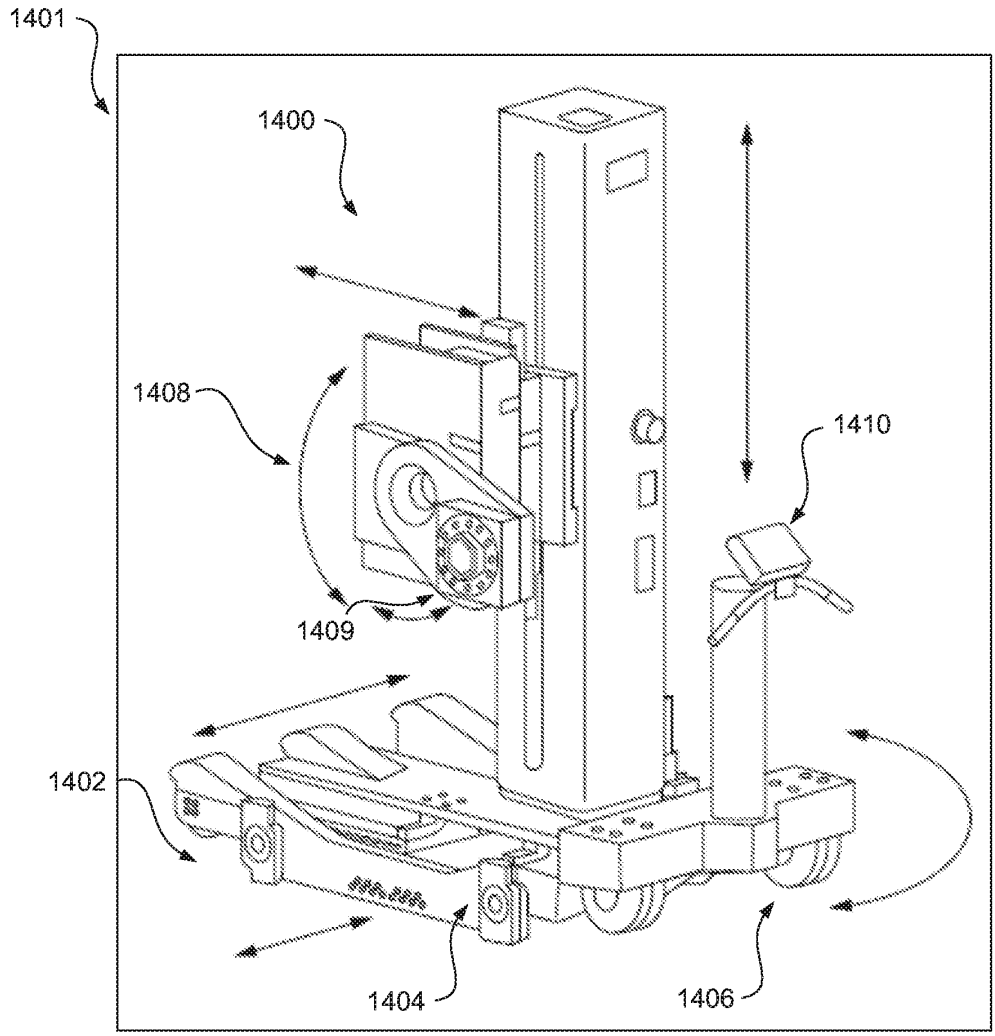


*Fig. 14*

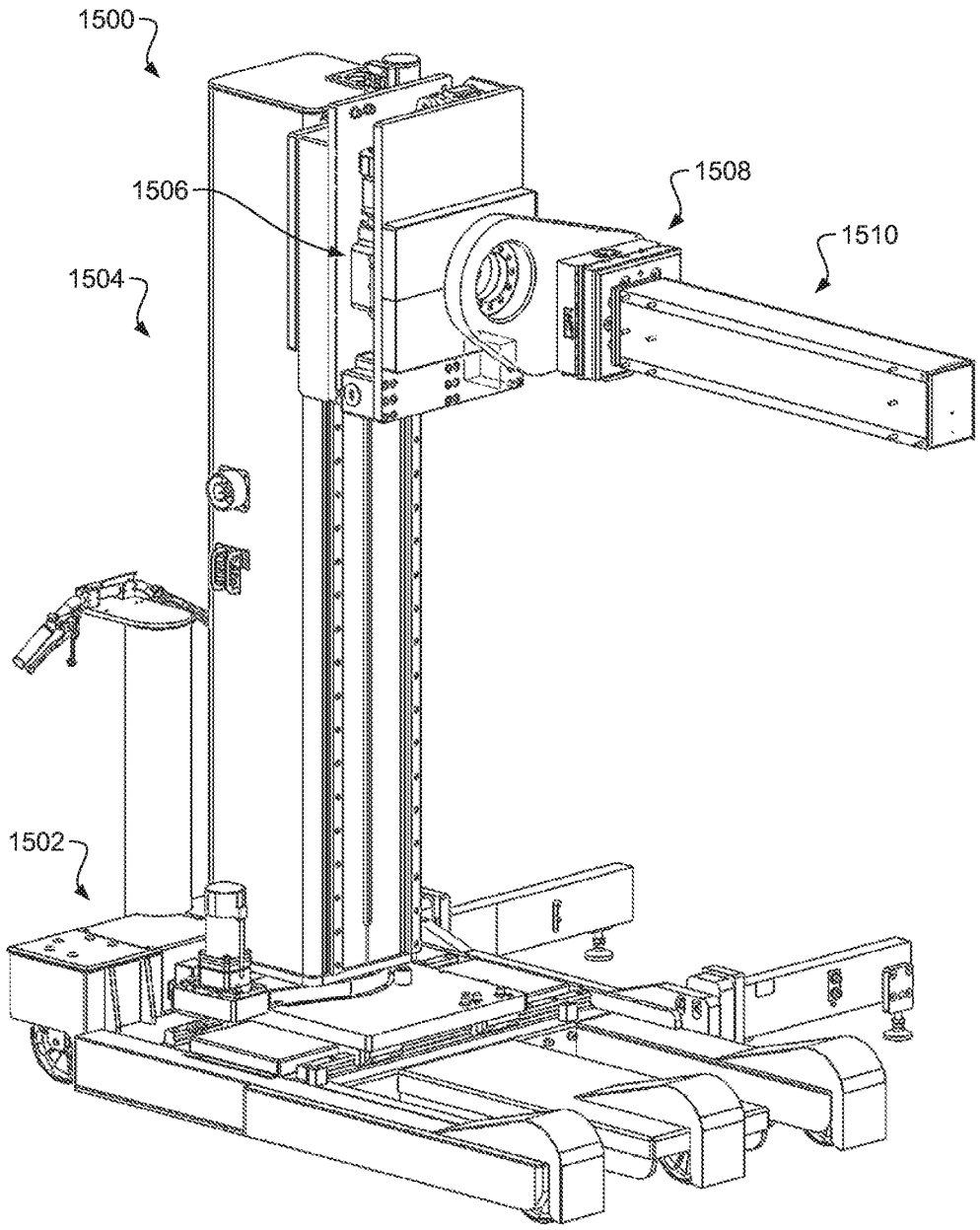


*Fig. 15*

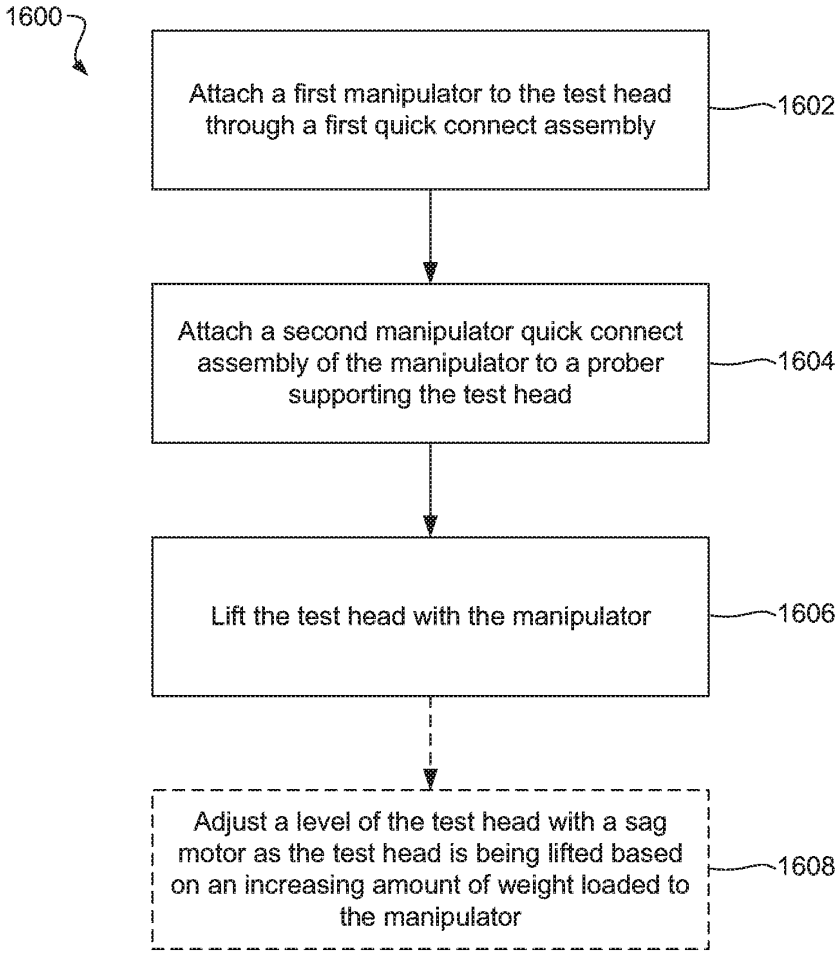
1600
Attach a first manipulator to the test head through a first quick connect assembly
1602
Attach a second manipulator quick connect assembly of the manipulator to a prober supporting the test head
1604
Lift the test head with the manipulator
1606
Adjust a level of the test head with a sag motor as the test head is being lifted based on an increasing amount of weight loaded to the manipulator
1608

*Fig. 16*