FIG. 1

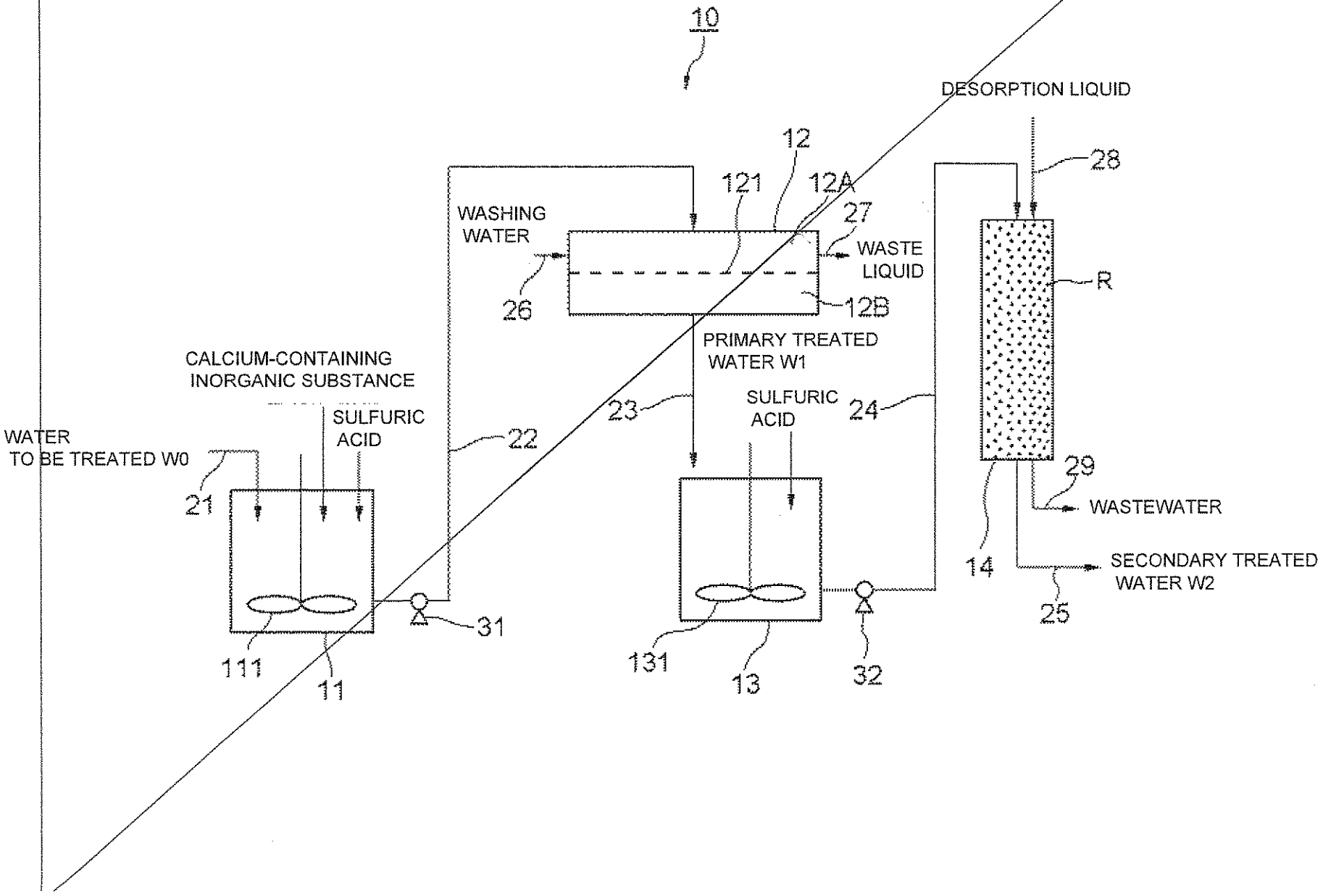
10
DESORPTION LIQUID
12
28
121
12A
WASHING WATER
27
WASTE LIQUID
R
26
12B
PRIMARY TREATED WATER W1
CALCIUM-CONTAINING INORGANIC SUBSTANCE
SULFURIC ACID
SULFURIC ACID
23
24
WATER TO BE TREATED W0
22
29
WASTEWATER
21
14
SECONDARY TREATED WATER W2
25
31
111
11
131
13
32

FIG. 2

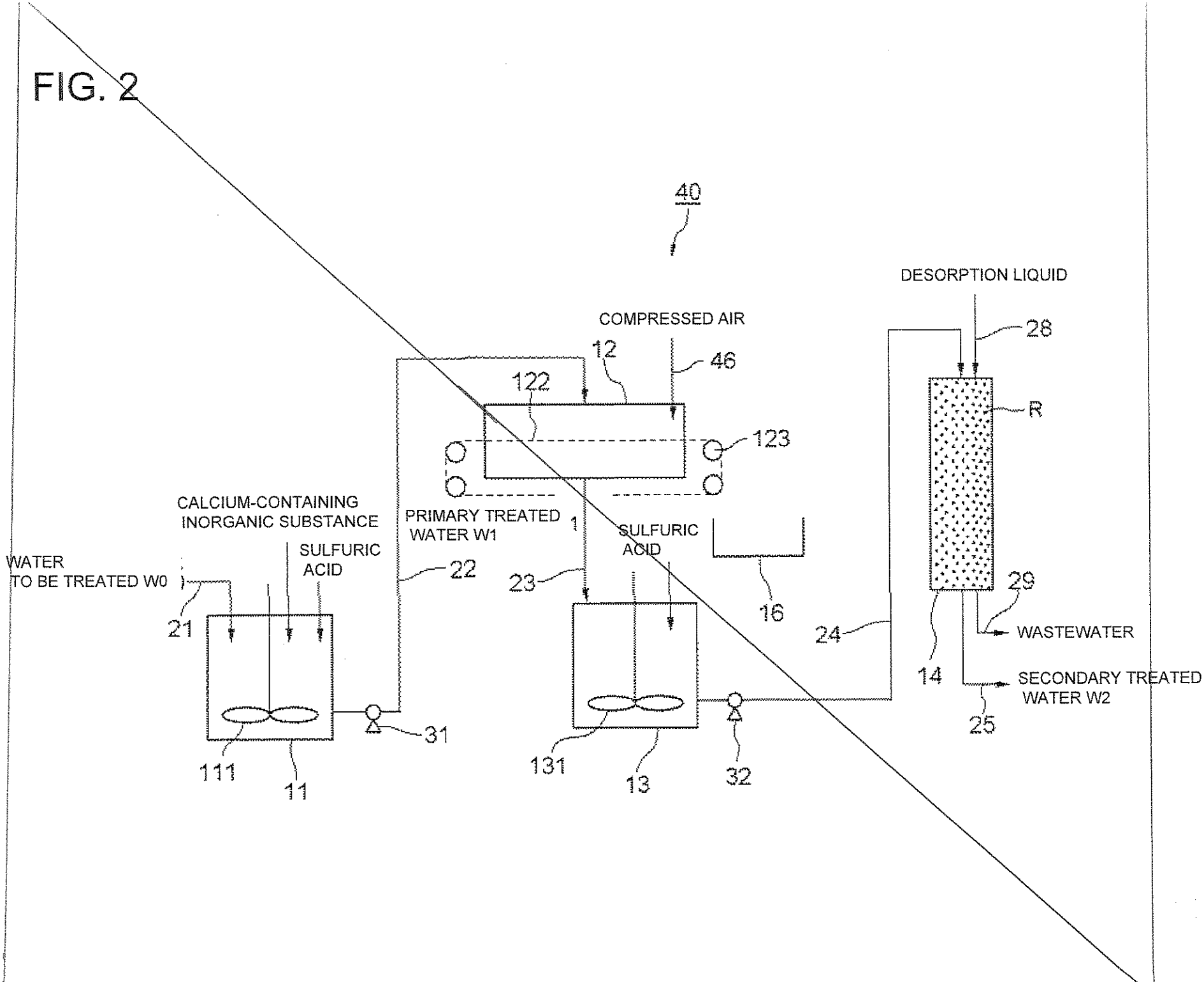
40
DESORPTION LIQUID
COMPRESSED AIR
28
12
46
122
R
123
CALCIUM-CONTAINING
INORGANIC SUBSTANCE
PRIMARY TREATED
WATER W1
1
SULFURIC
ACID
SULFURIC
ACID
WATER
TO BE TREATED W0
22
23
16
29
21
24
WASTEWATER
14
SECONDARY TREATED
WATER W2
31
25
111
11
131
13
32

FIG. 1

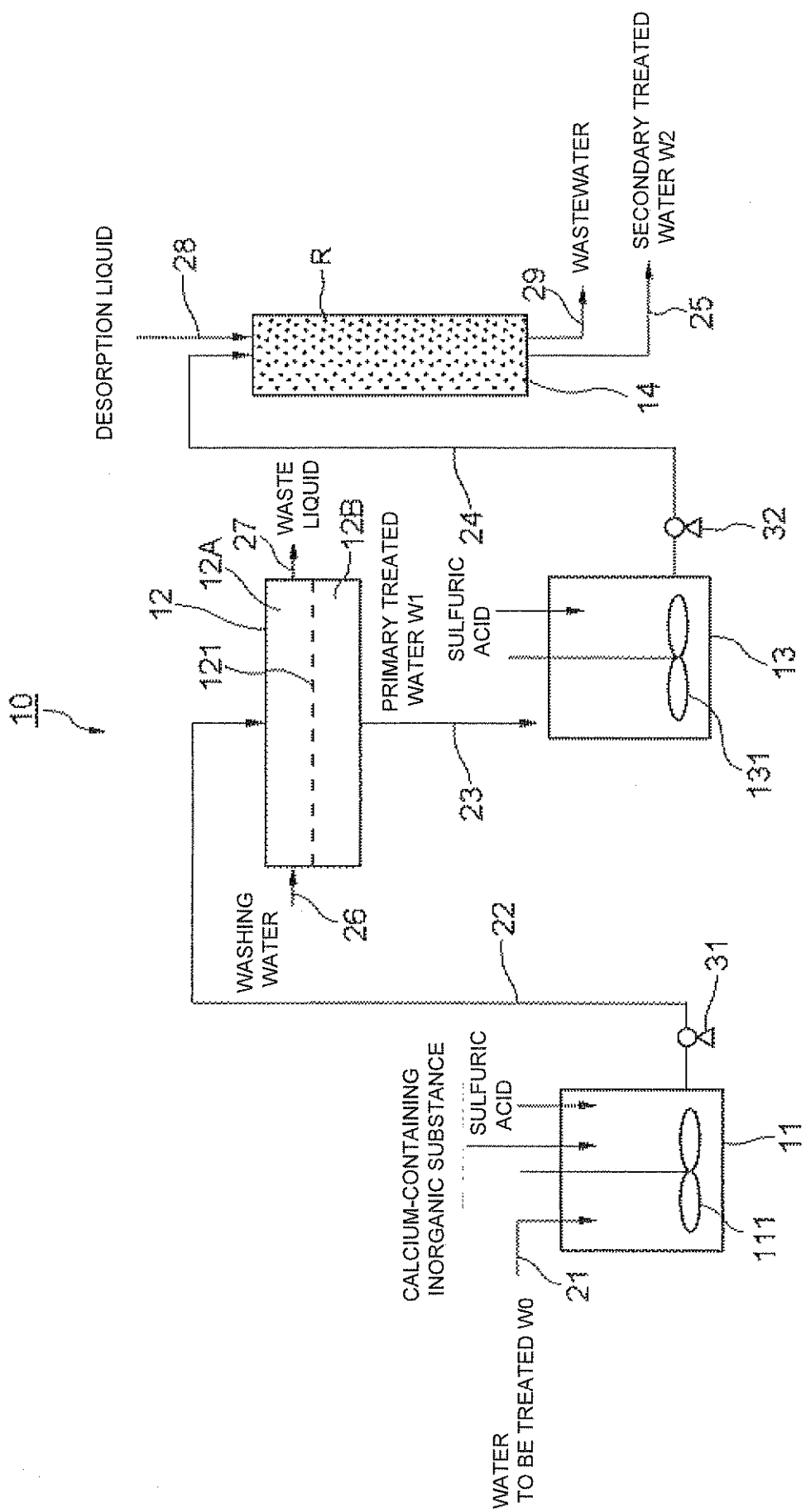
10
DESORPTION LIQUID
28
R
29
WASTEWATER
SECONDARY TREATED WATER W2
25
14
24
32
12
12A
27
WASTE LIQUID
12B
121
PRIMARY TREATED WATER W1
SULFURIC ACID
13
131
23
WASHING WATER
26
22
31
CALCIUM-CONTAINING INORGANIC SUBSTANCE
SULFURIC ACID
11
111
21
WATER TO BE TREATED W0

FIG. 2

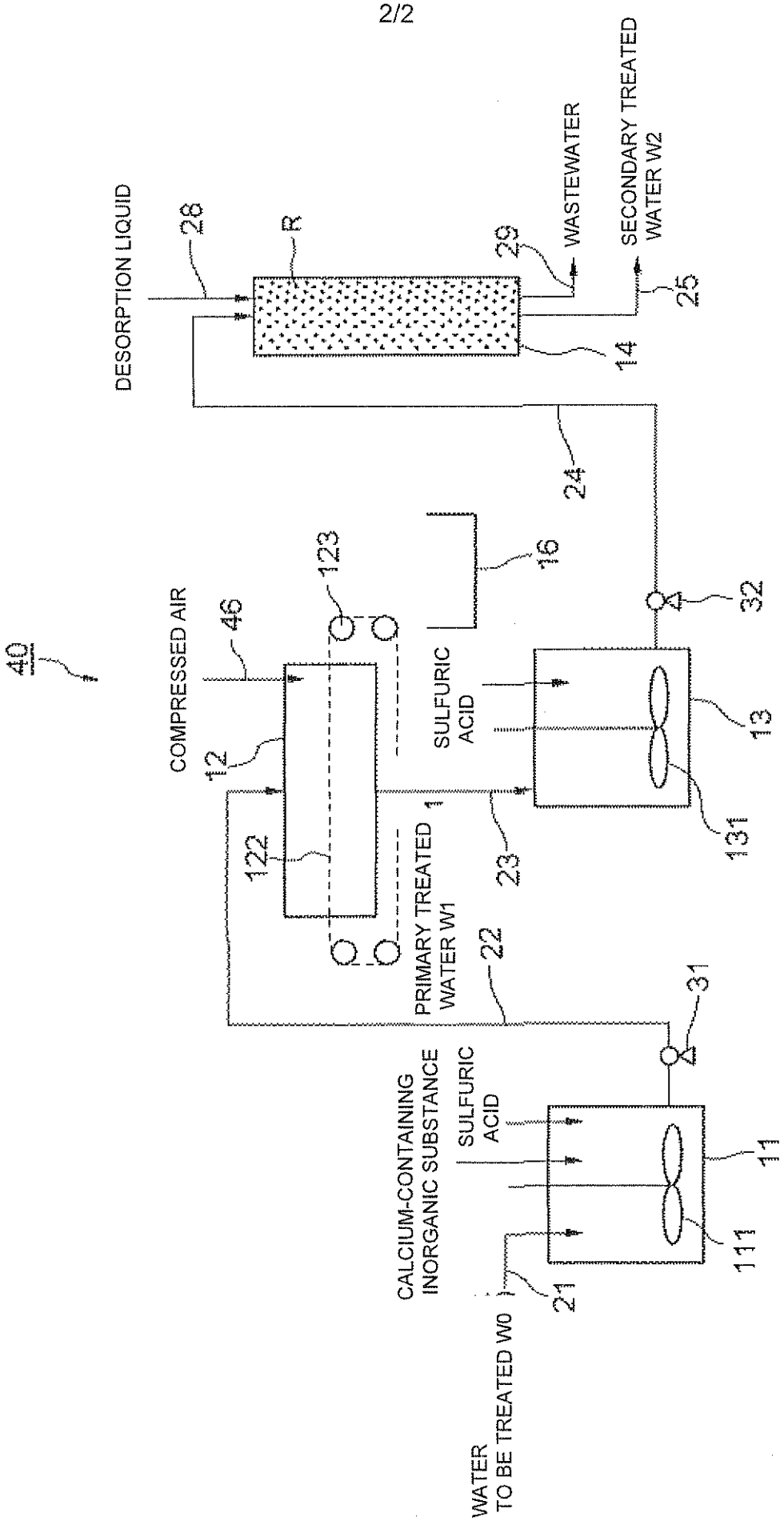
40
DESORPTION LIQUID
28
R
29
WASTEWATER
SECONDARY TREATED WATER W2
25
14
24
16
32
COMPRESSED AIR
46
123
12
122
SULFURIC ACID
13
131
1
23
PRIMARY TREATED WATER W1
22
31
CALCIUM-CONTAINING INORGANIC SUBSTANCE
SULFURIC ACID
11
111
21
WATER TO BE TREATED W0