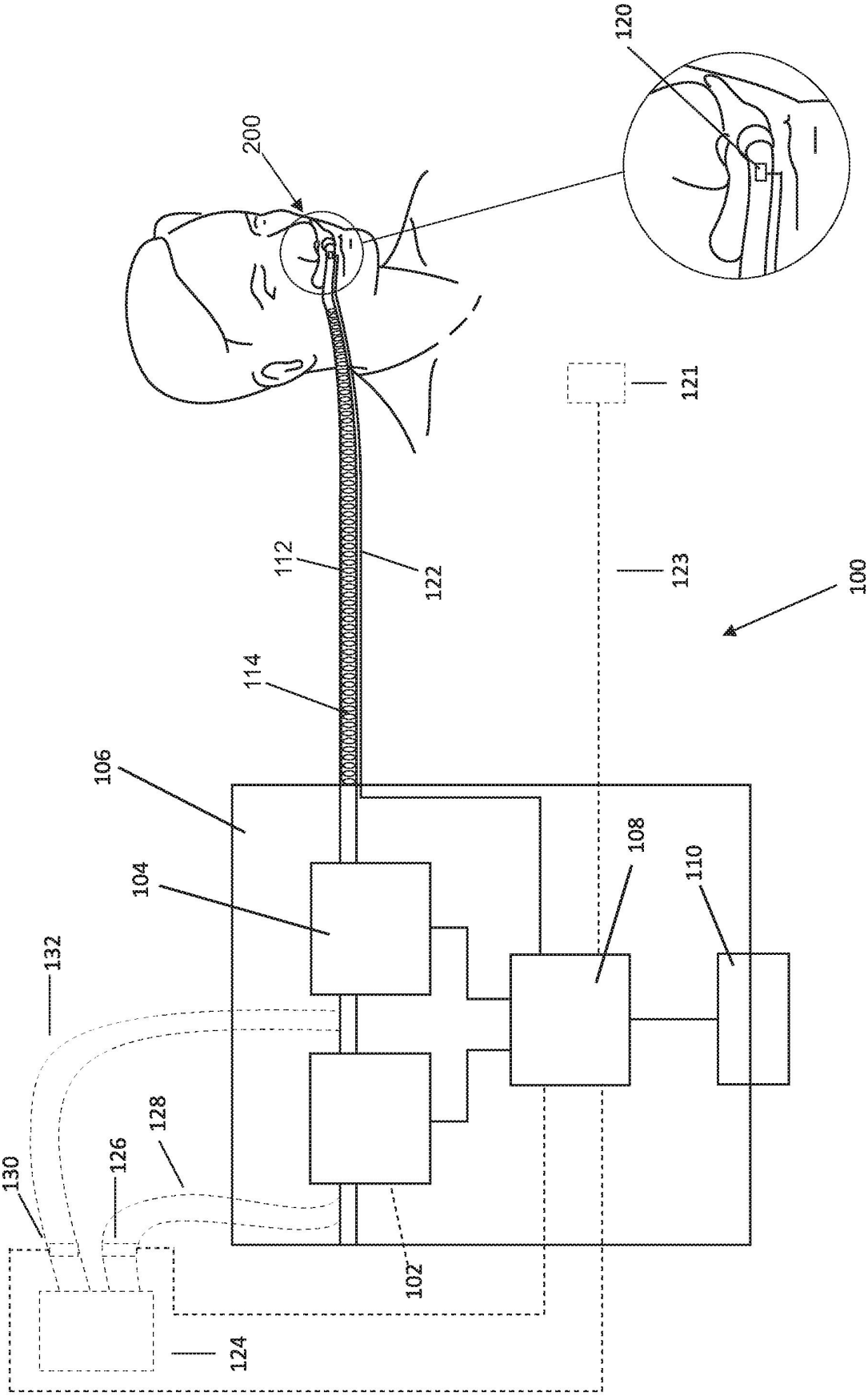
120
200
121
112
122
123
100
114
106
104
108
110
132
128
126
130
102
124

FIGURE 1

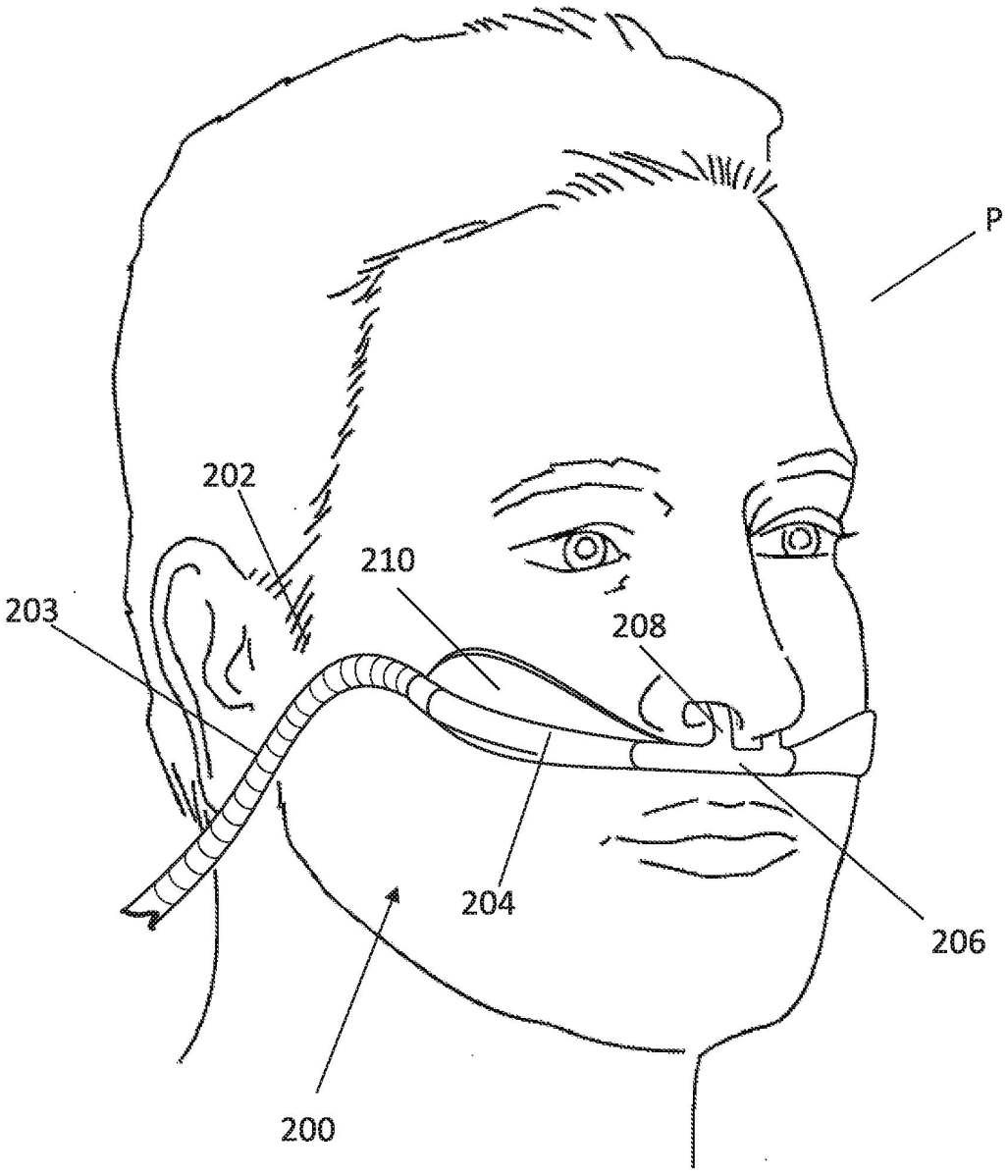

FIGURE 2

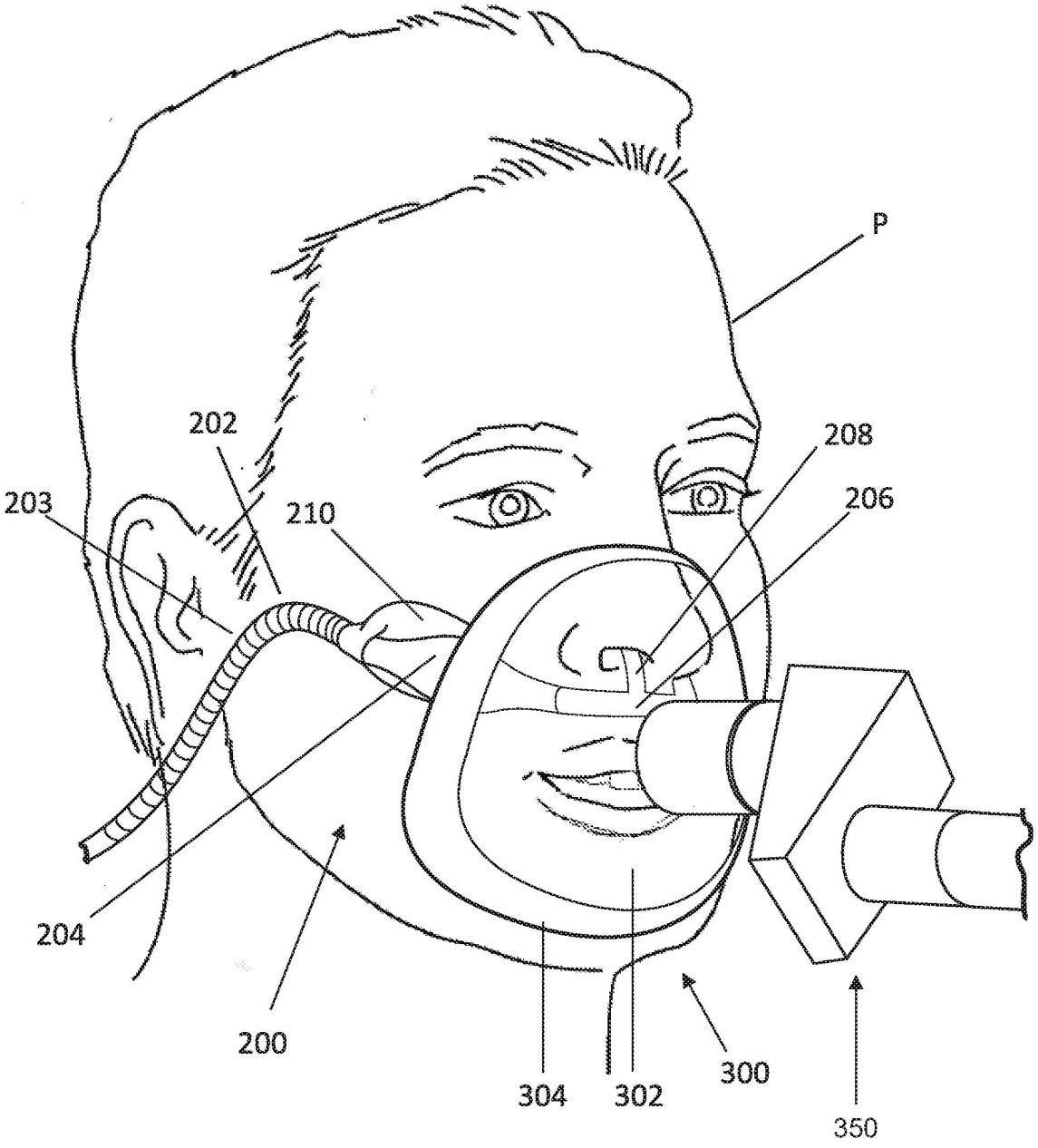

FIGURE 3

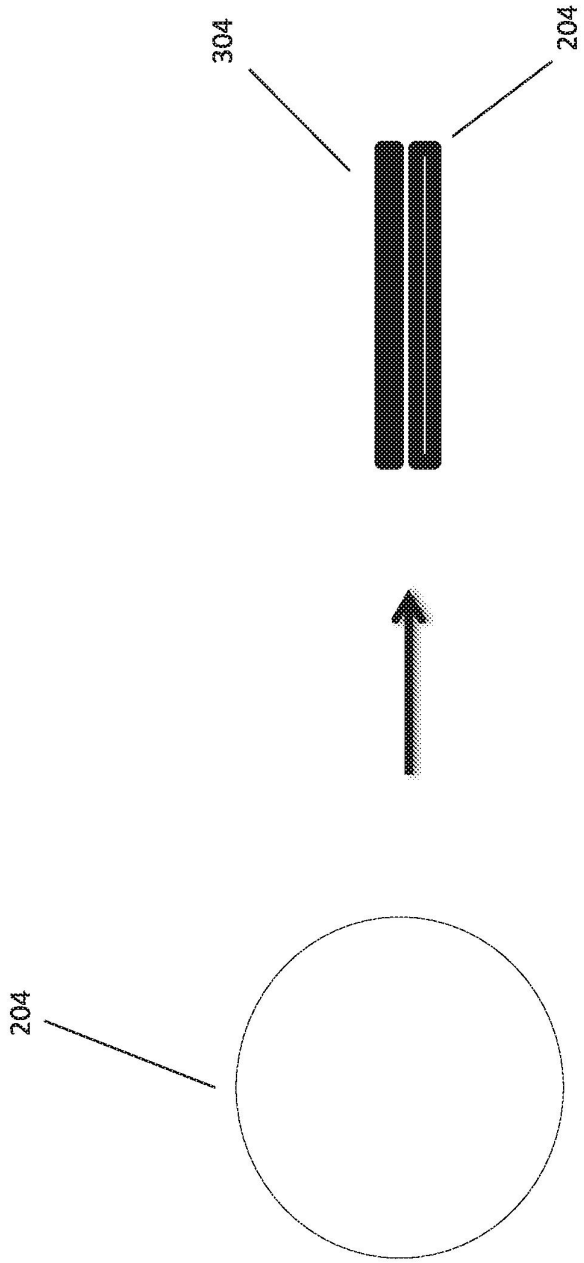

FIGURE 4

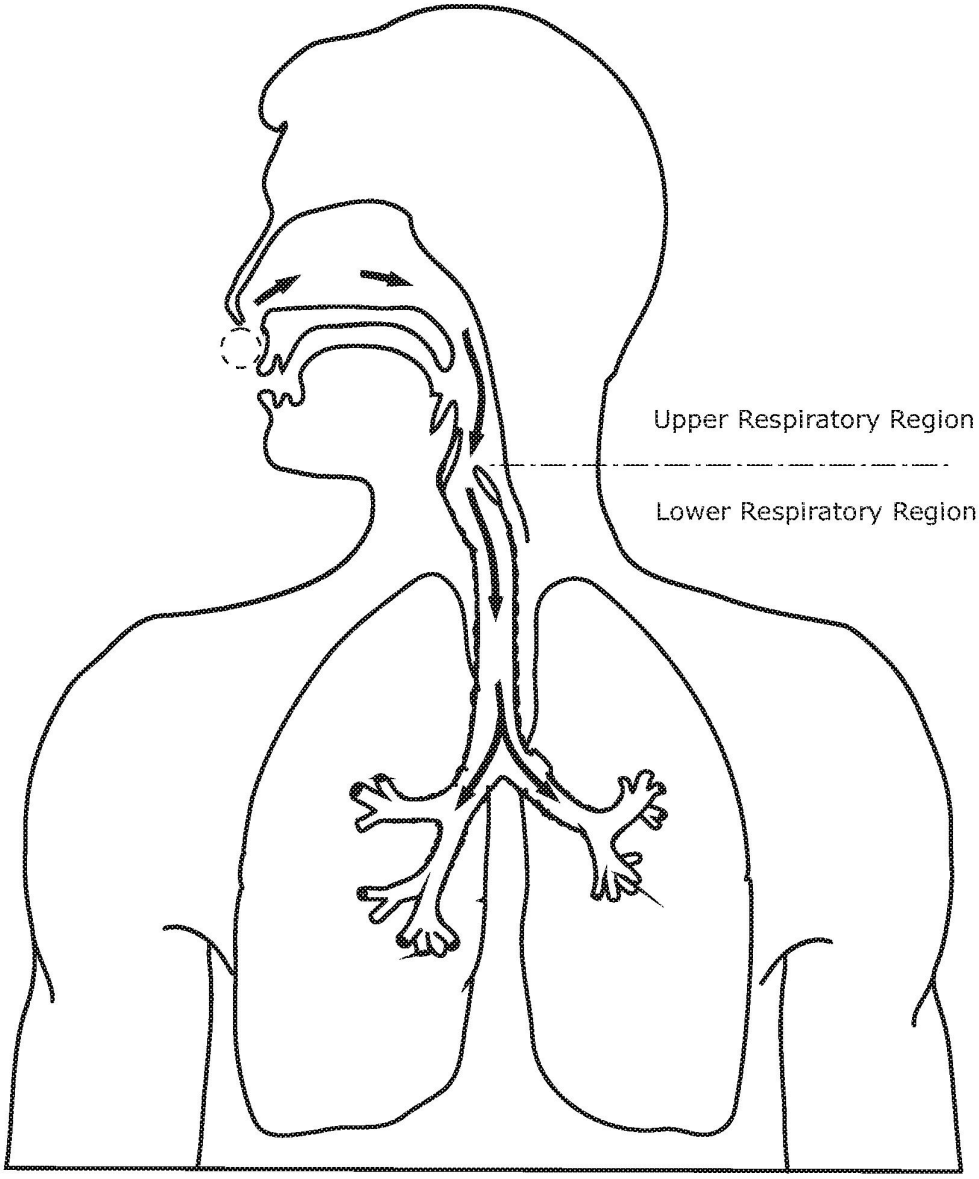

FIGURE 5

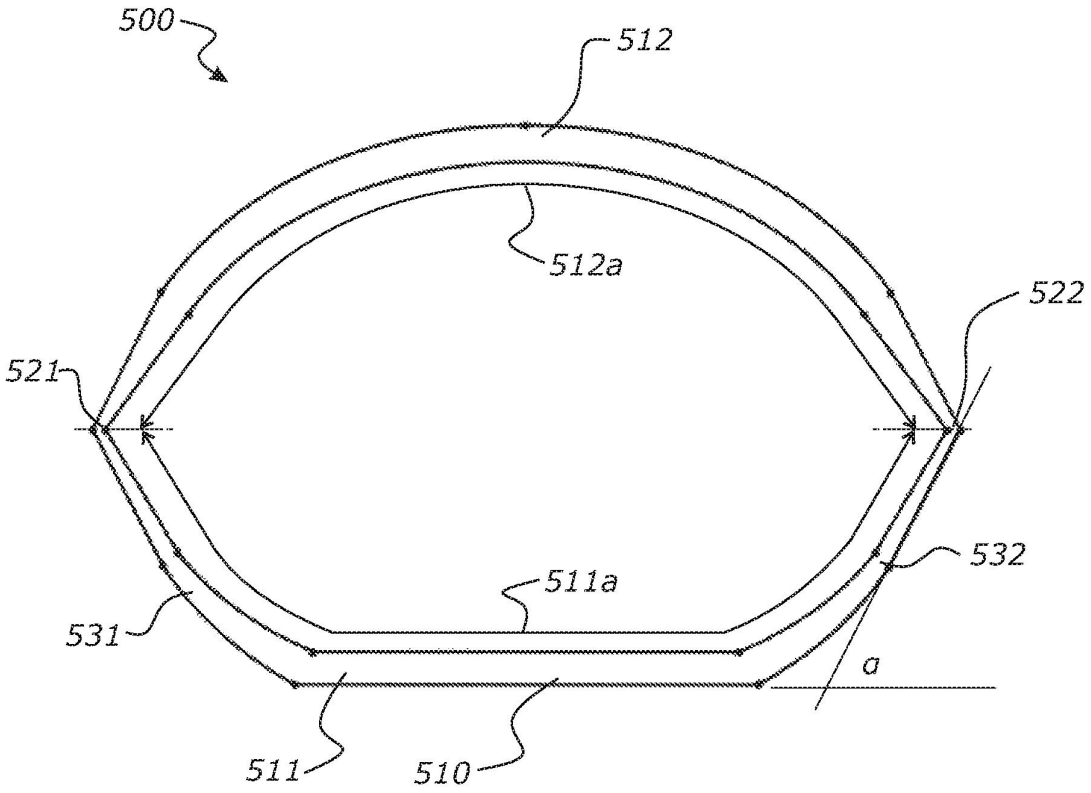

FIGURE 6A



FIGURE 6B

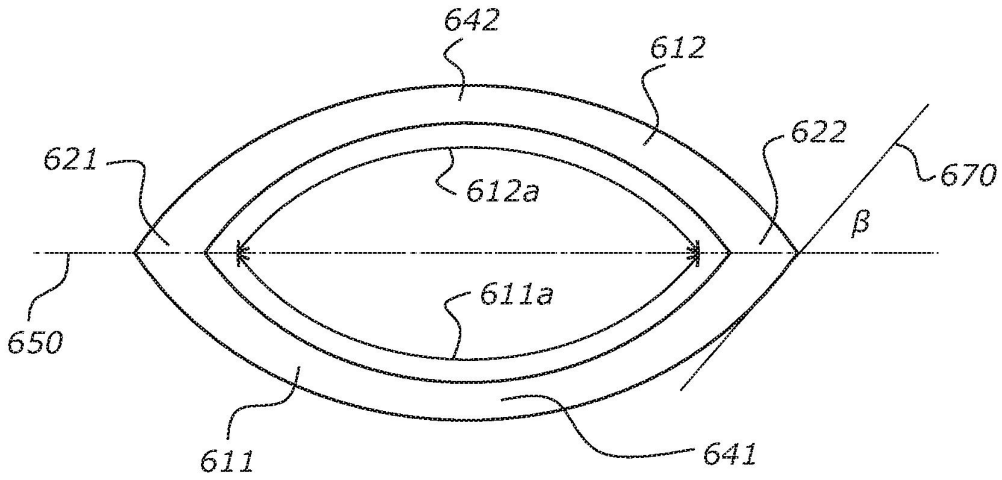

FIGURE 7A

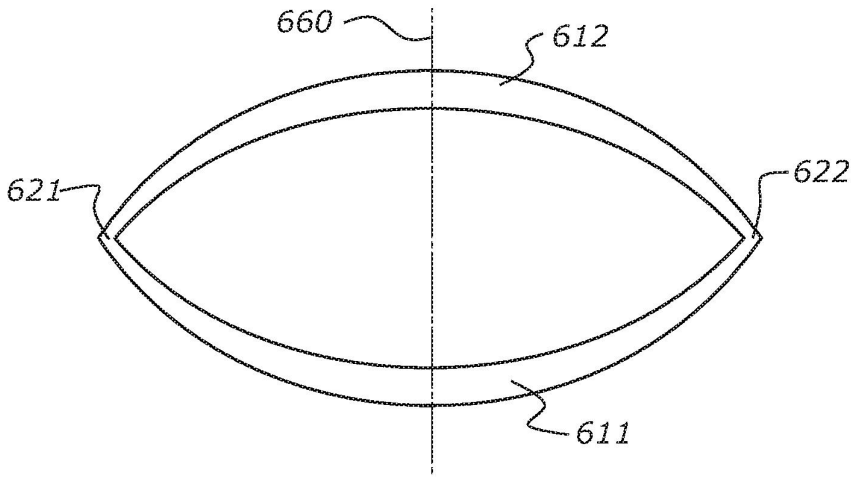

FIGURE 7B

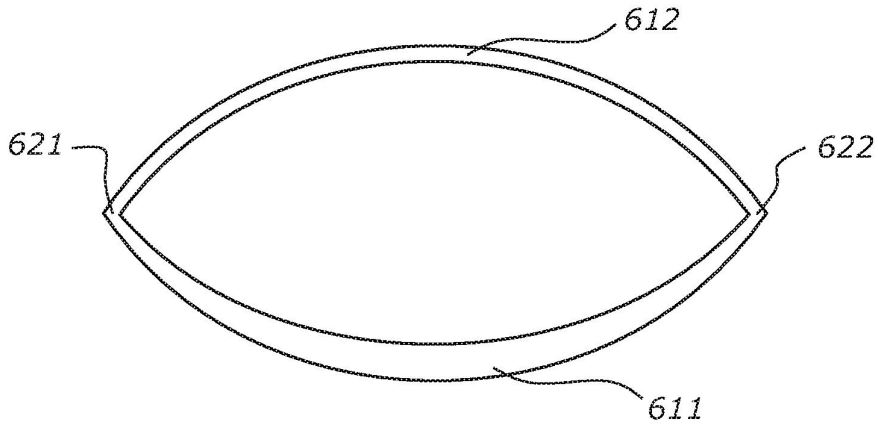

FIGURE 7C

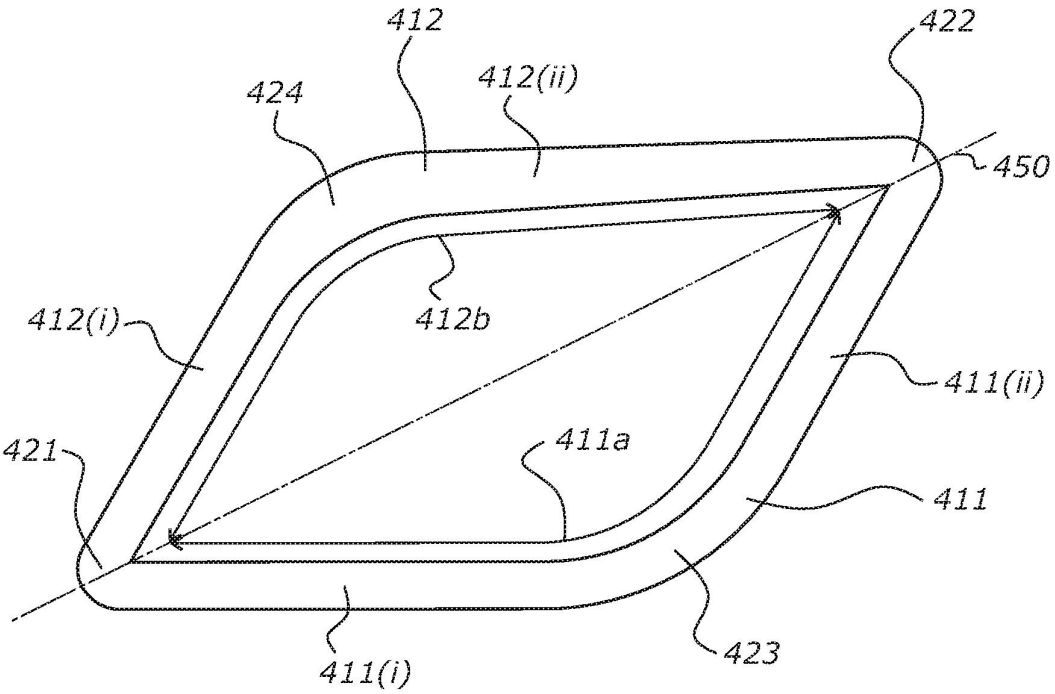

FIGURE 8A

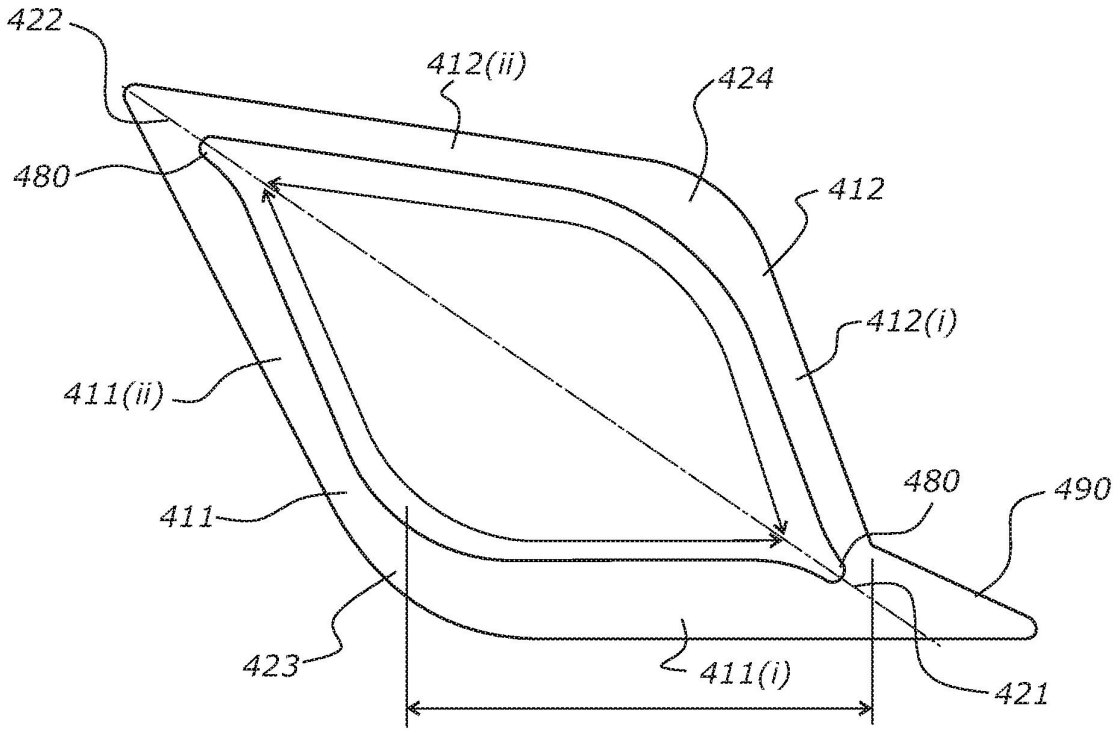

FIGURE 8B

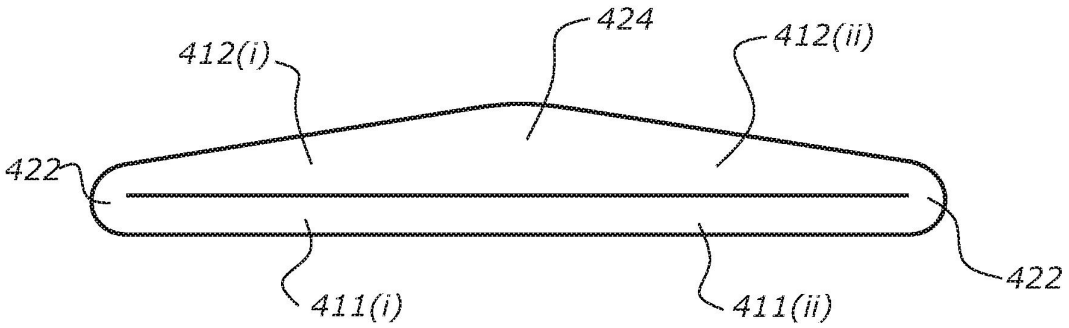

FIGURE 8C

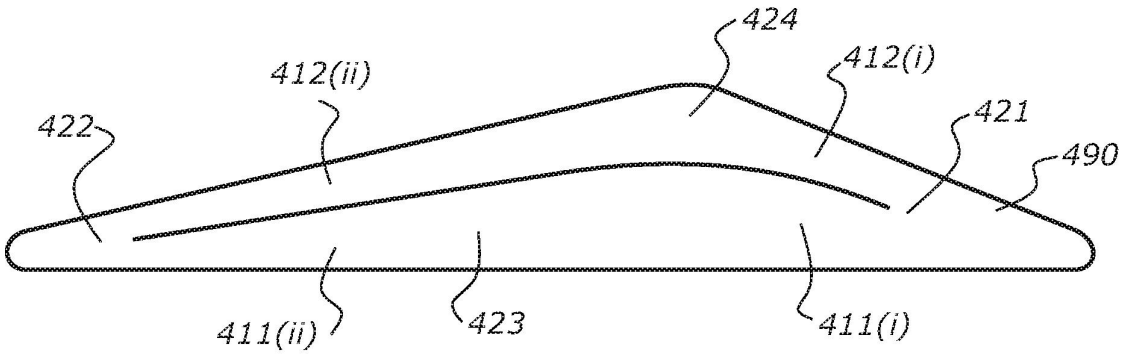

FIGURE 8D

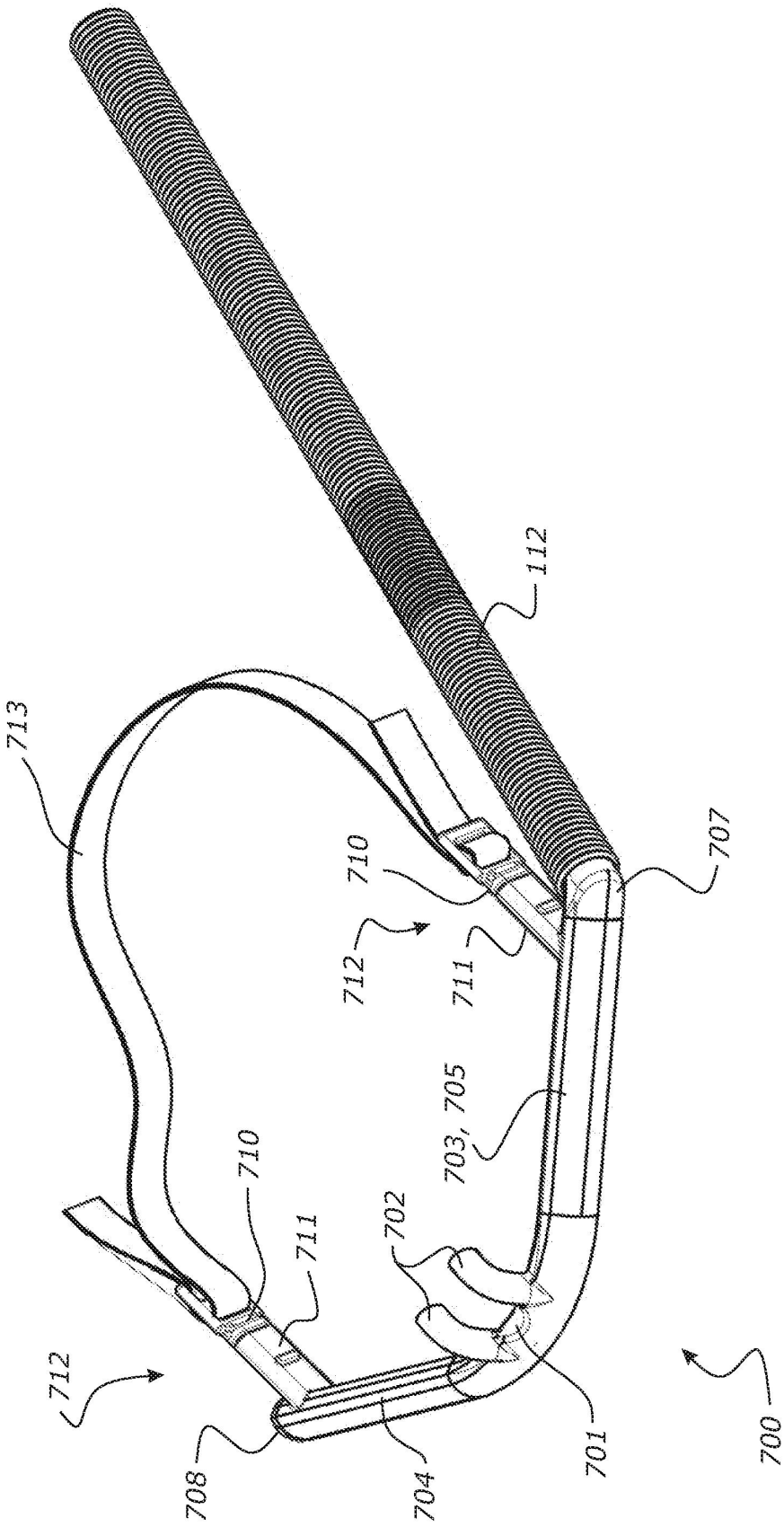

FIGURE 9A

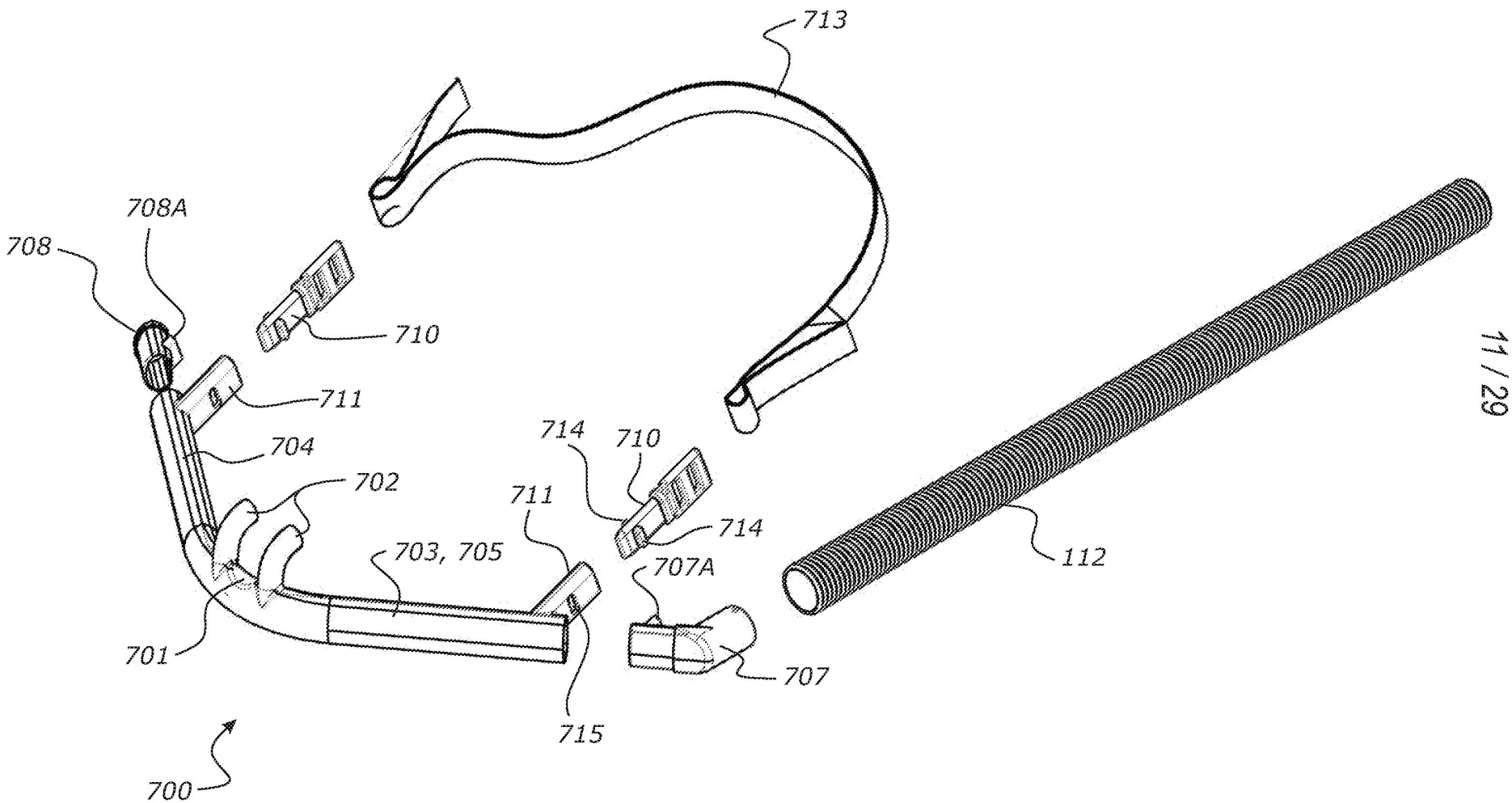
713
708A
708
710
711
704
702
714
710
711
714
703, 705
707A
112
701
707
715
700

FIGURE 9B

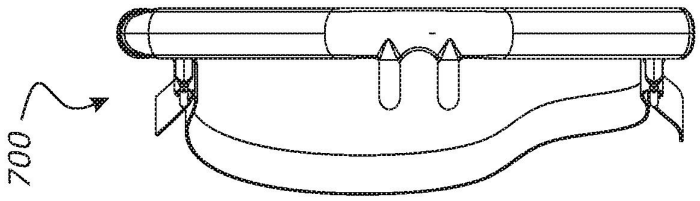

FIGURE 9D

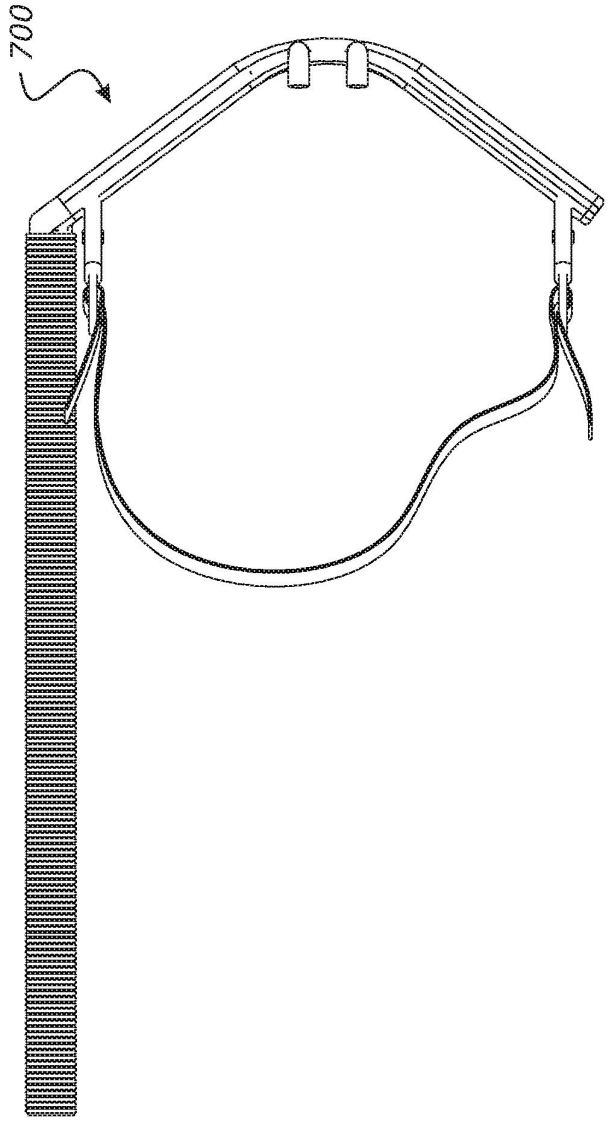

FIGURE 9C

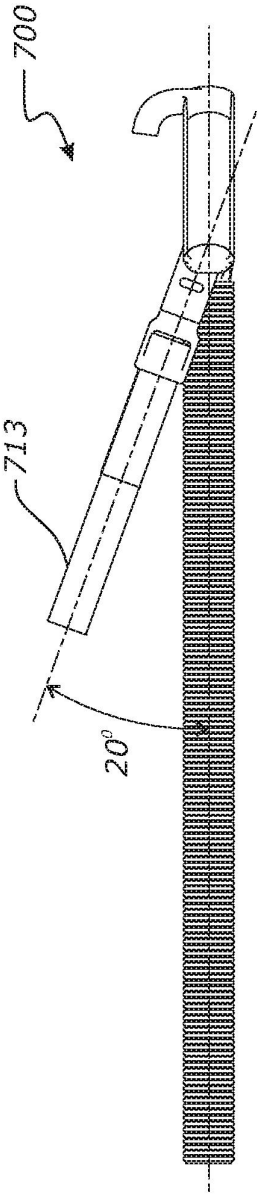

FIGURE 9E

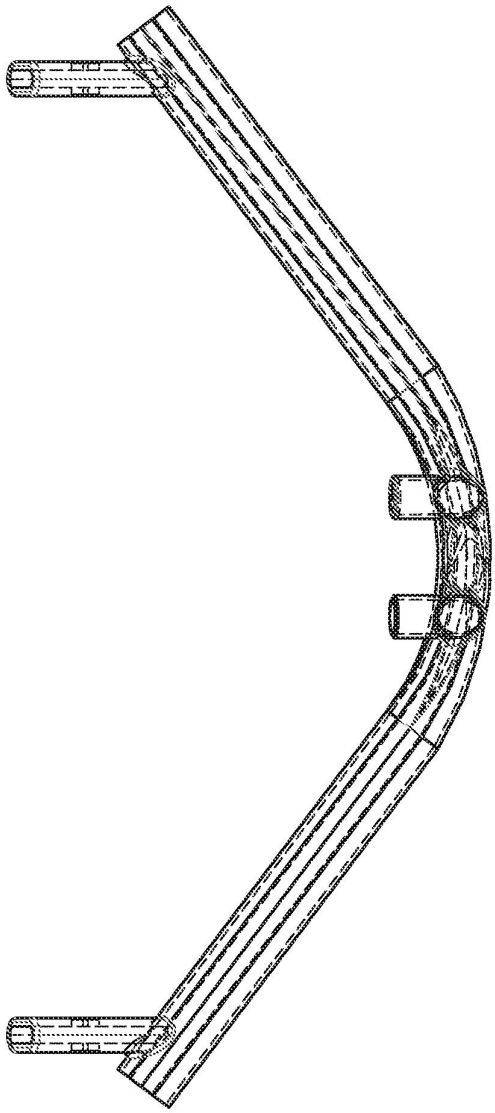

FIGURE 9F

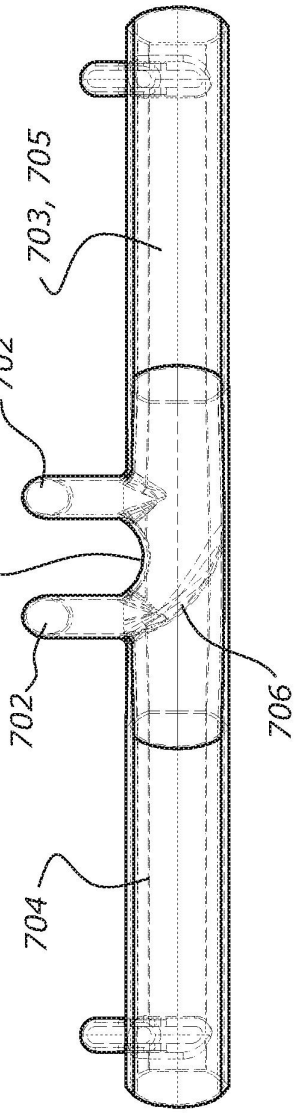

FIGURE 9G

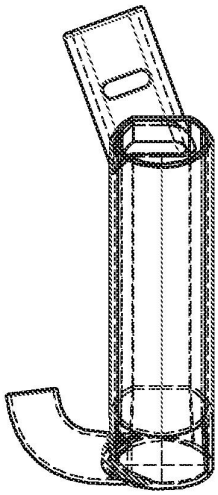

FIGURE 9H

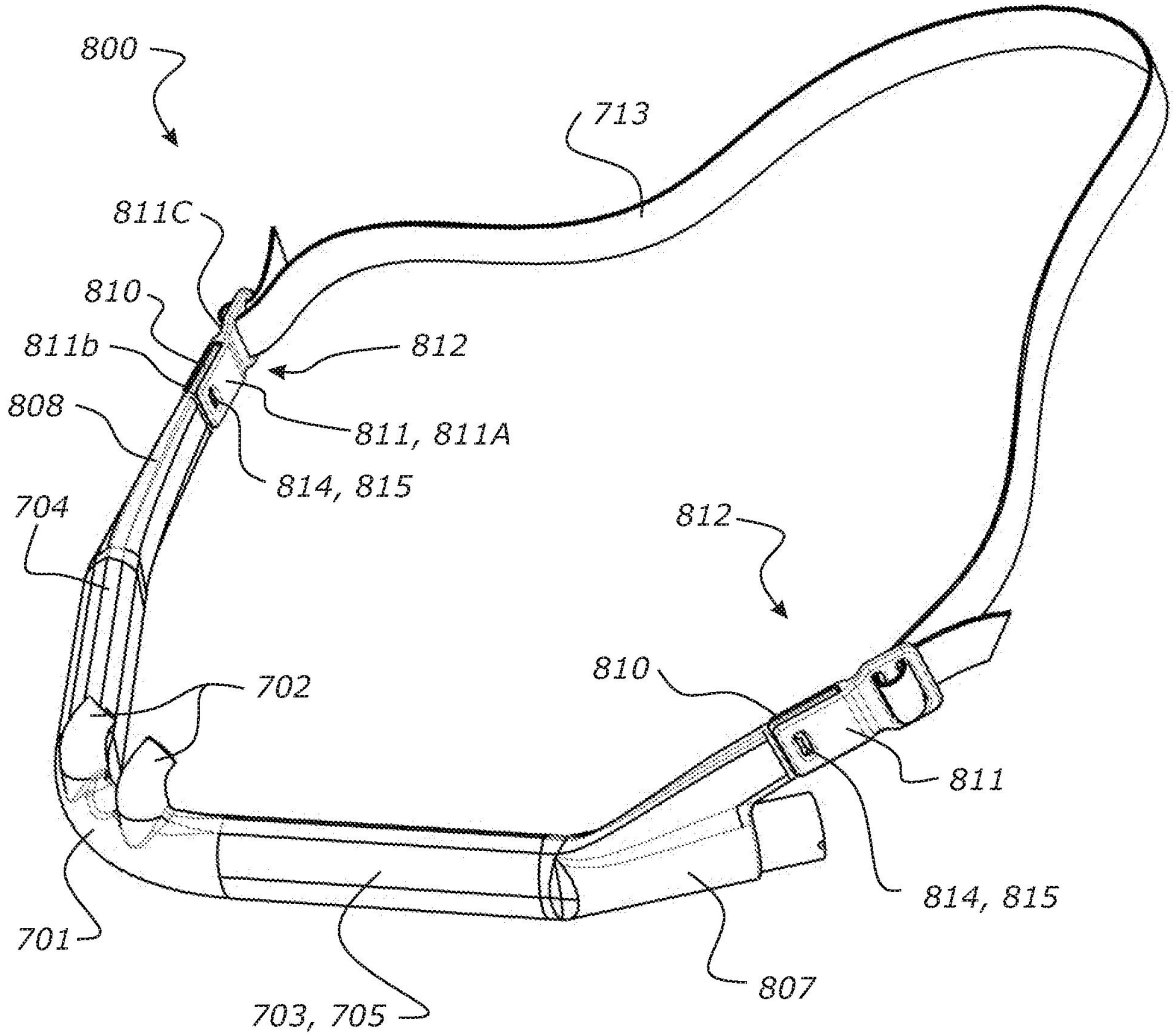
800
713
811C
810
811b
812
808
811, 811A
814, 815
704
812
810
702
811
814, 815
701
807
703, 705

FIGURE 10A

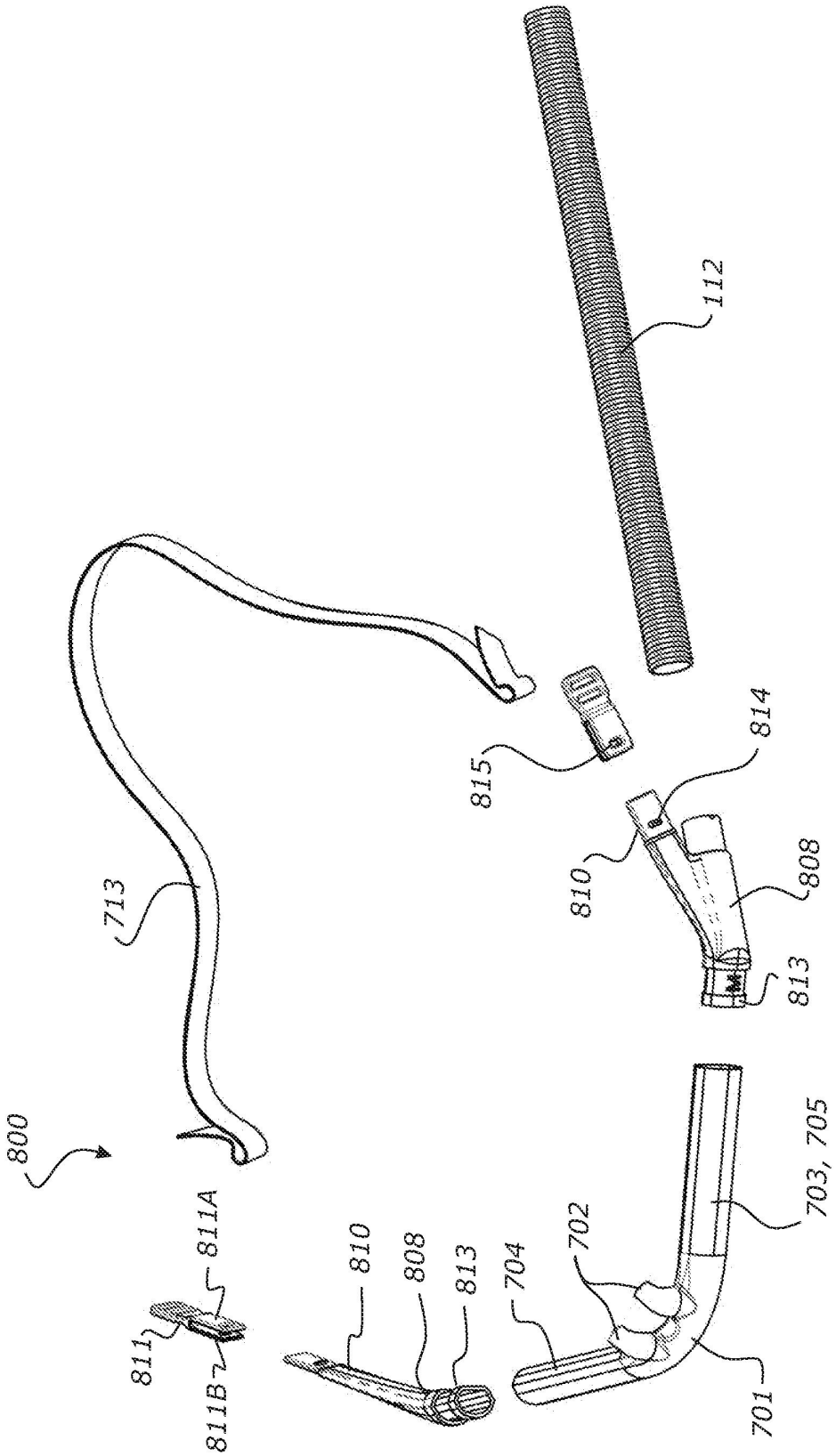
800
811A
811
811B
810
808
813
704
702
703, 705
701
713
815
814
810
808
813
112

FIGURE 10B

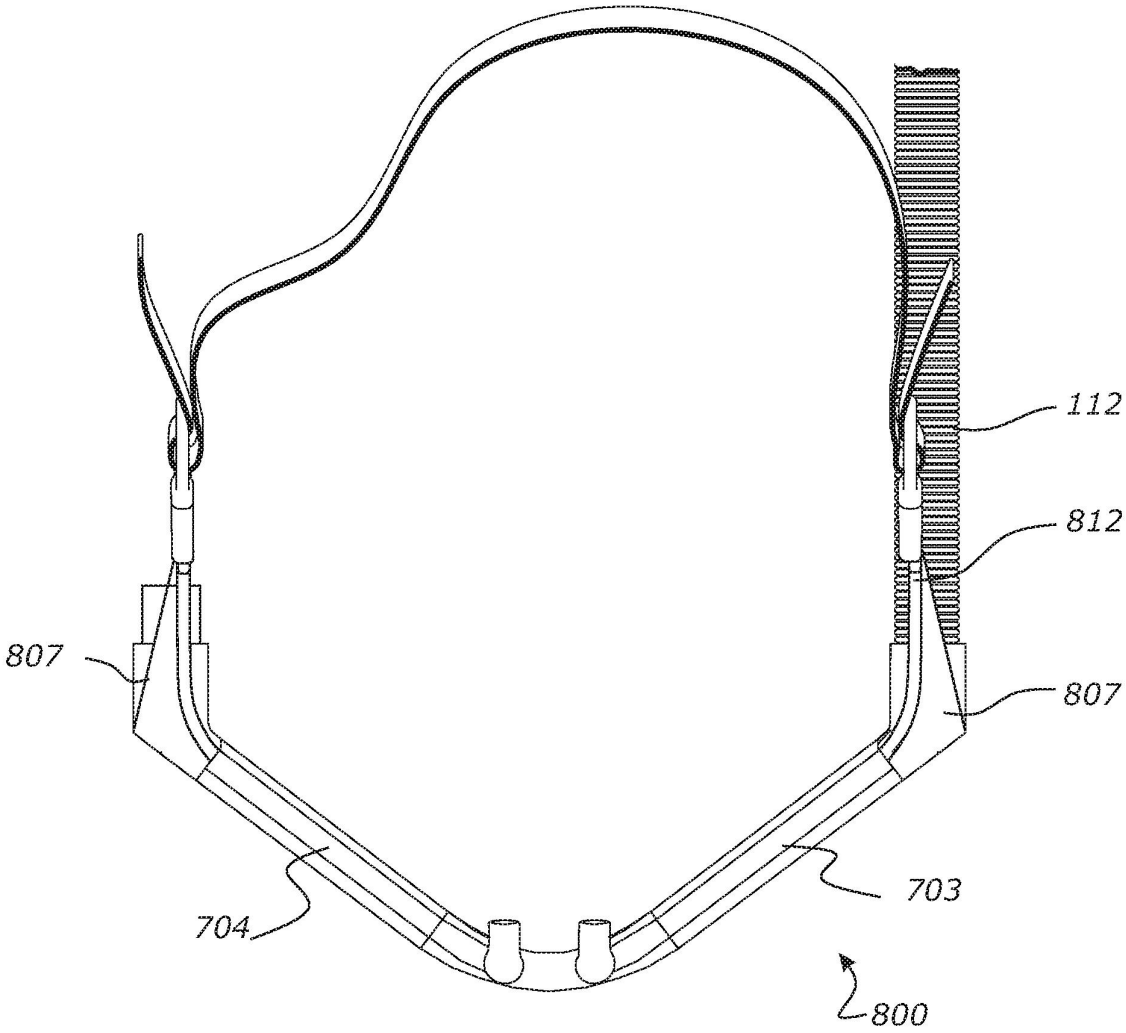

FIGURE 10C

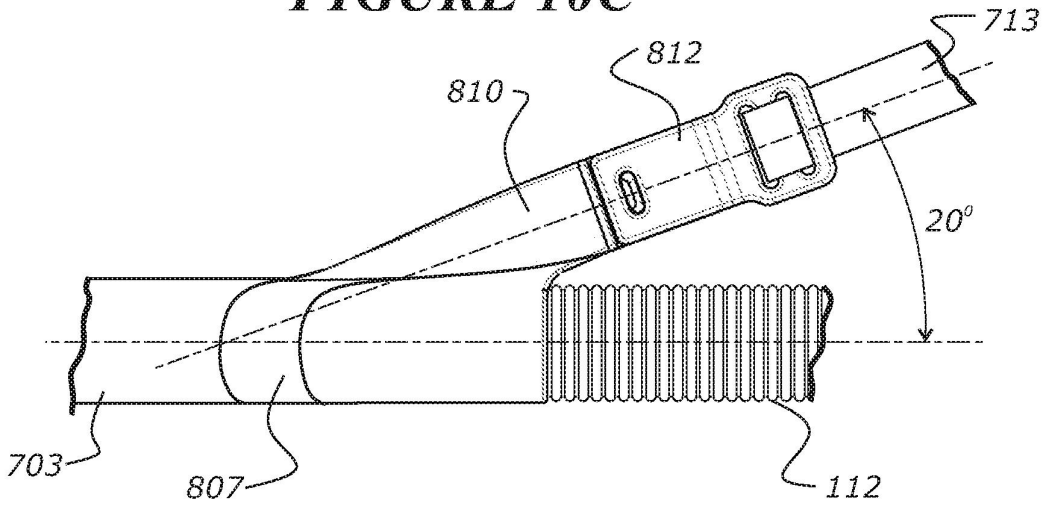

FIGURE 10D

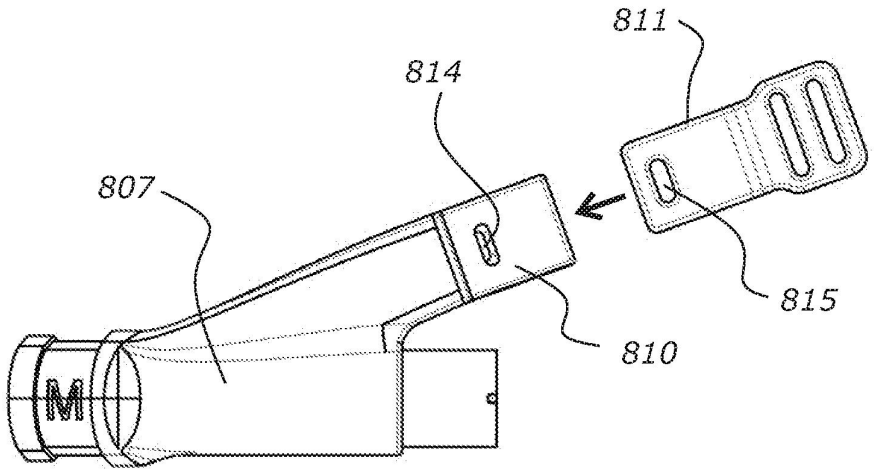

FIGURE 11A

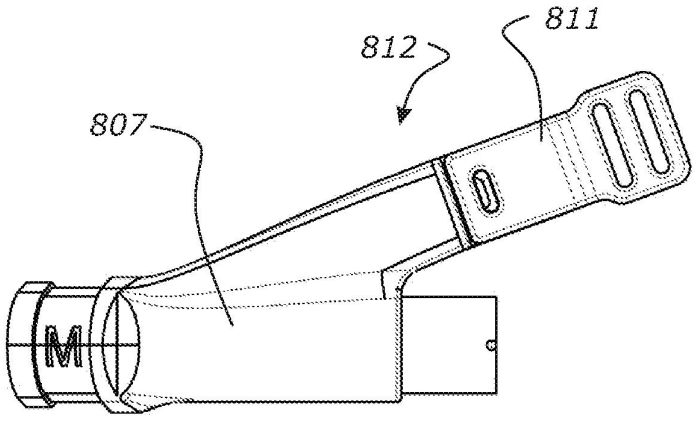

FIGURE 11B

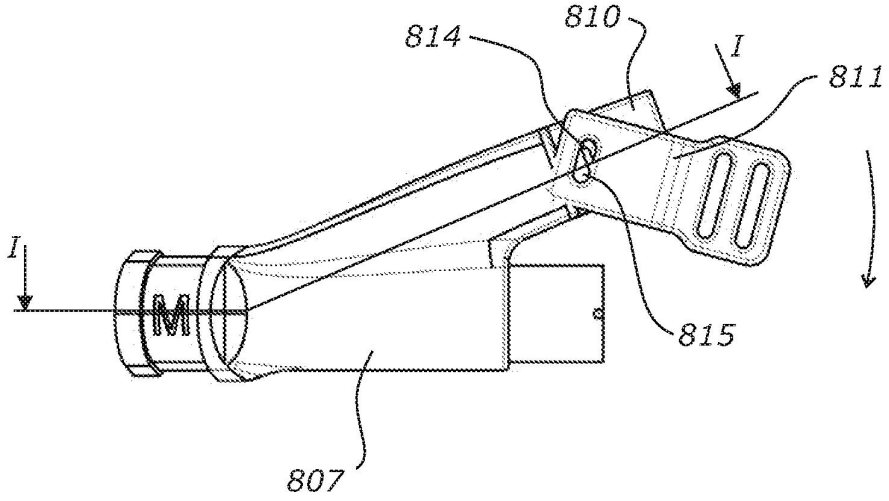

FIGURE 11C

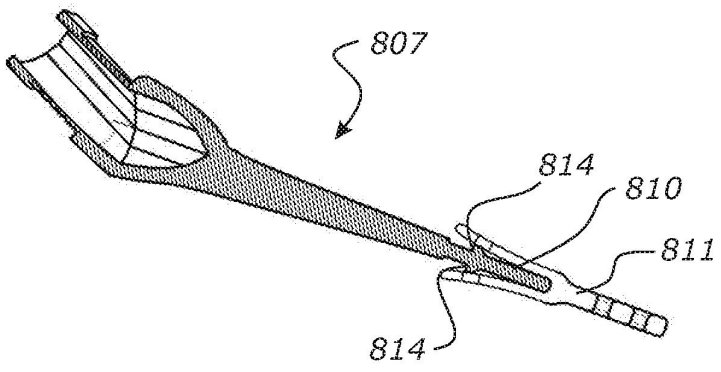

FIGURE 11D

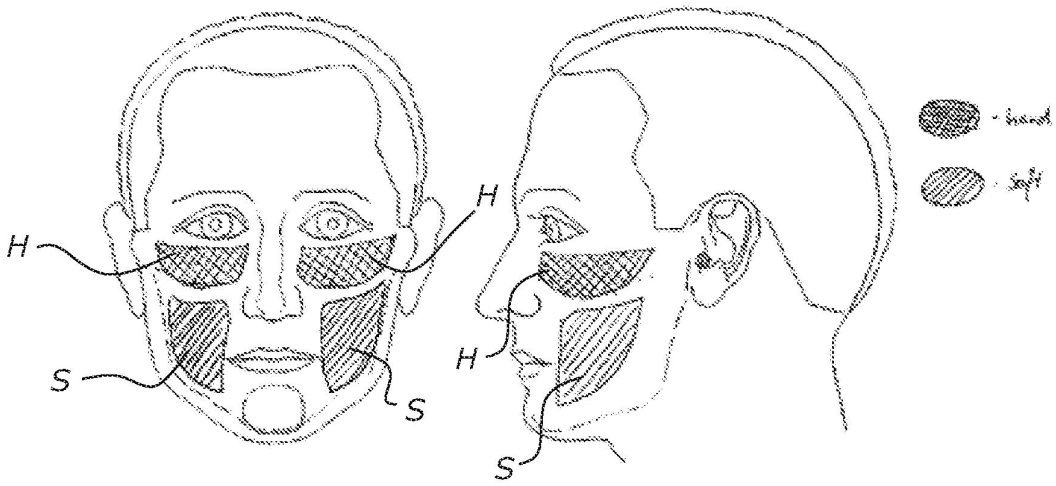

FIGURE 12A

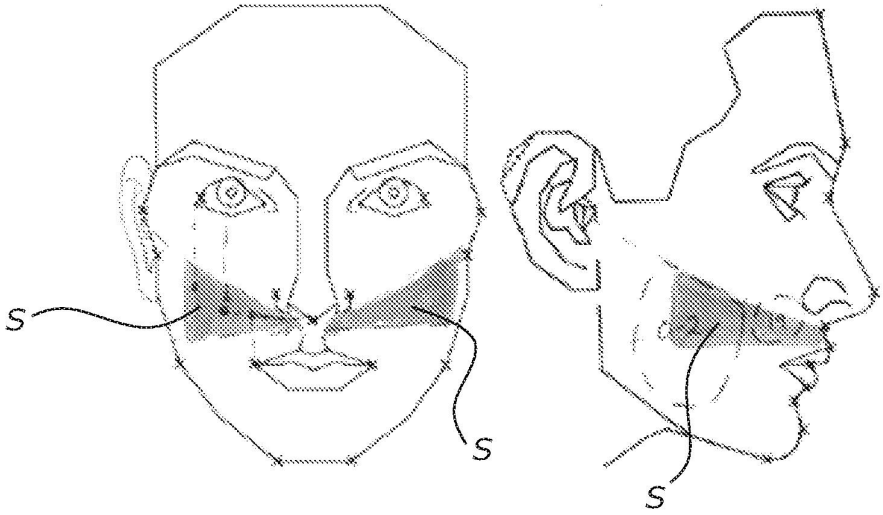

FIGURE 12B

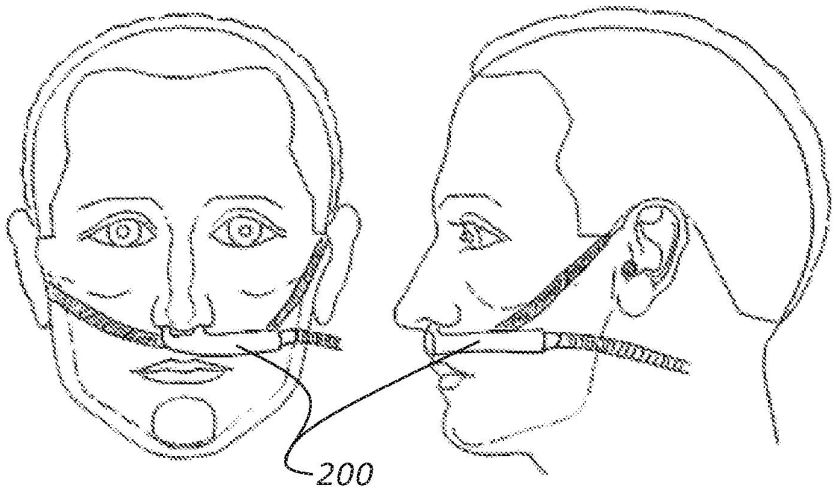

FIGURE 12C

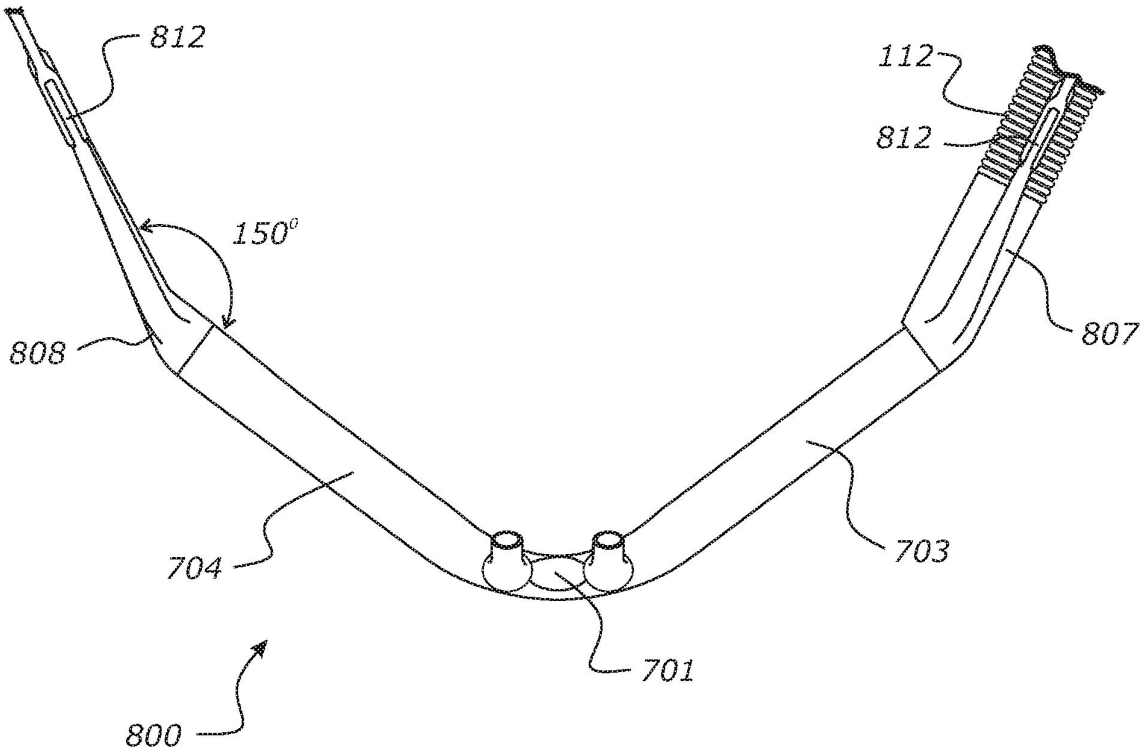

FIGURE 13A

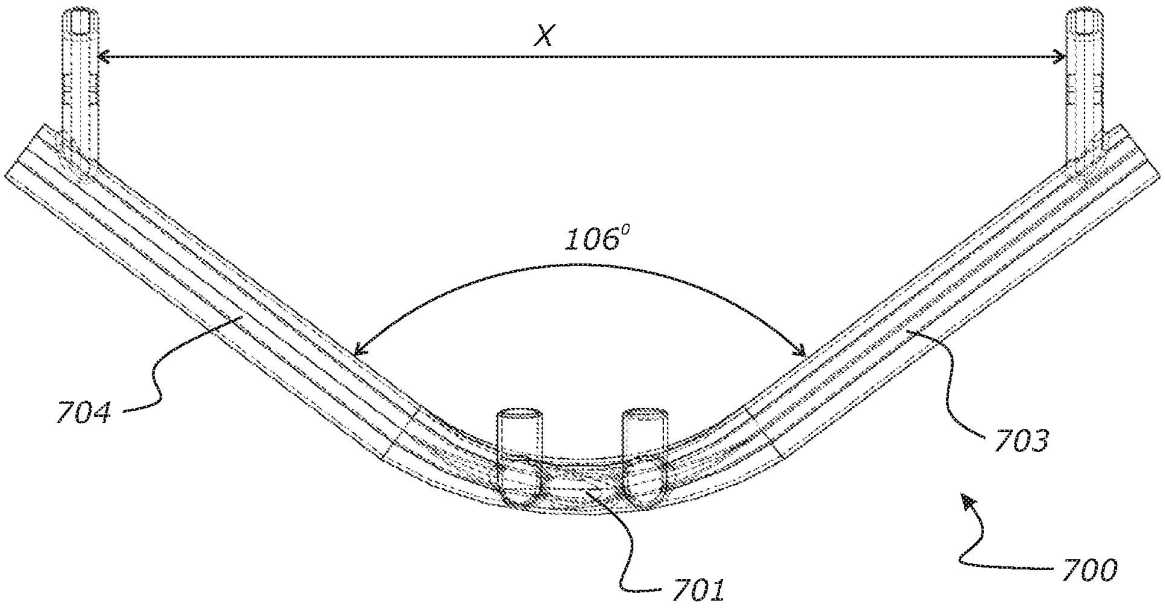

FIGURE 13B

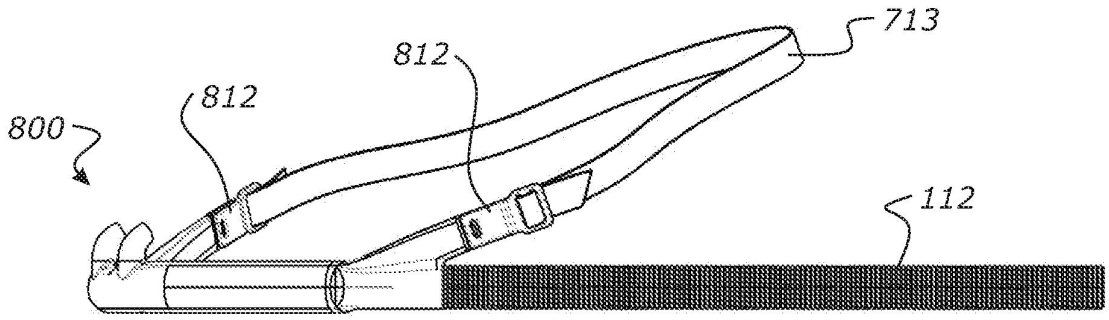

FIGURE 14A

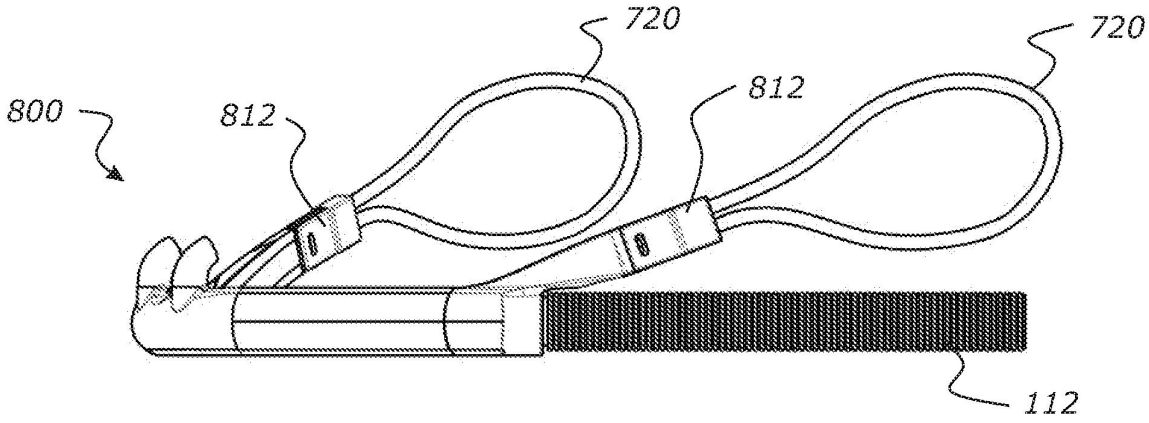

FIGURE 14B

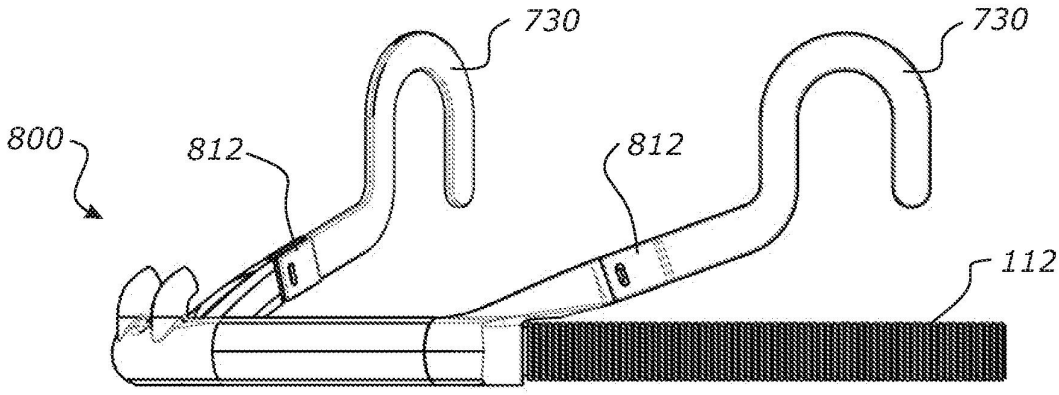

FIGURE 14C

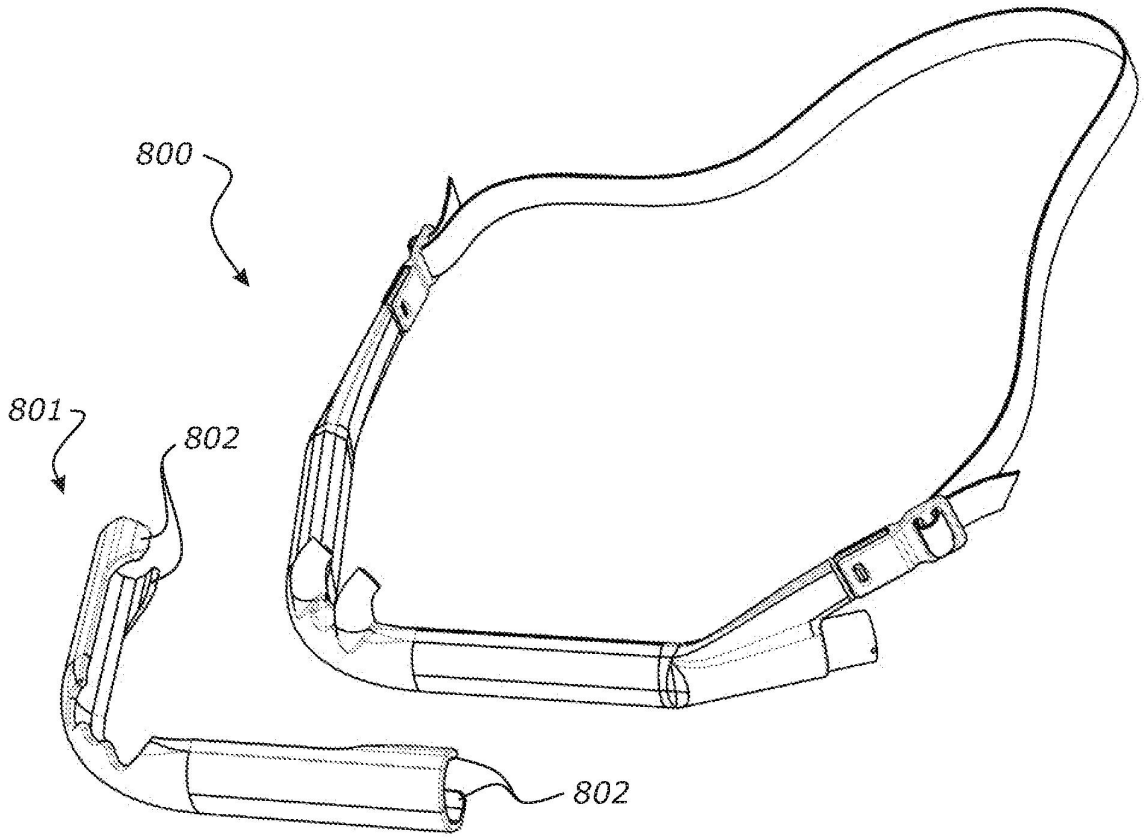

FIGURE 15

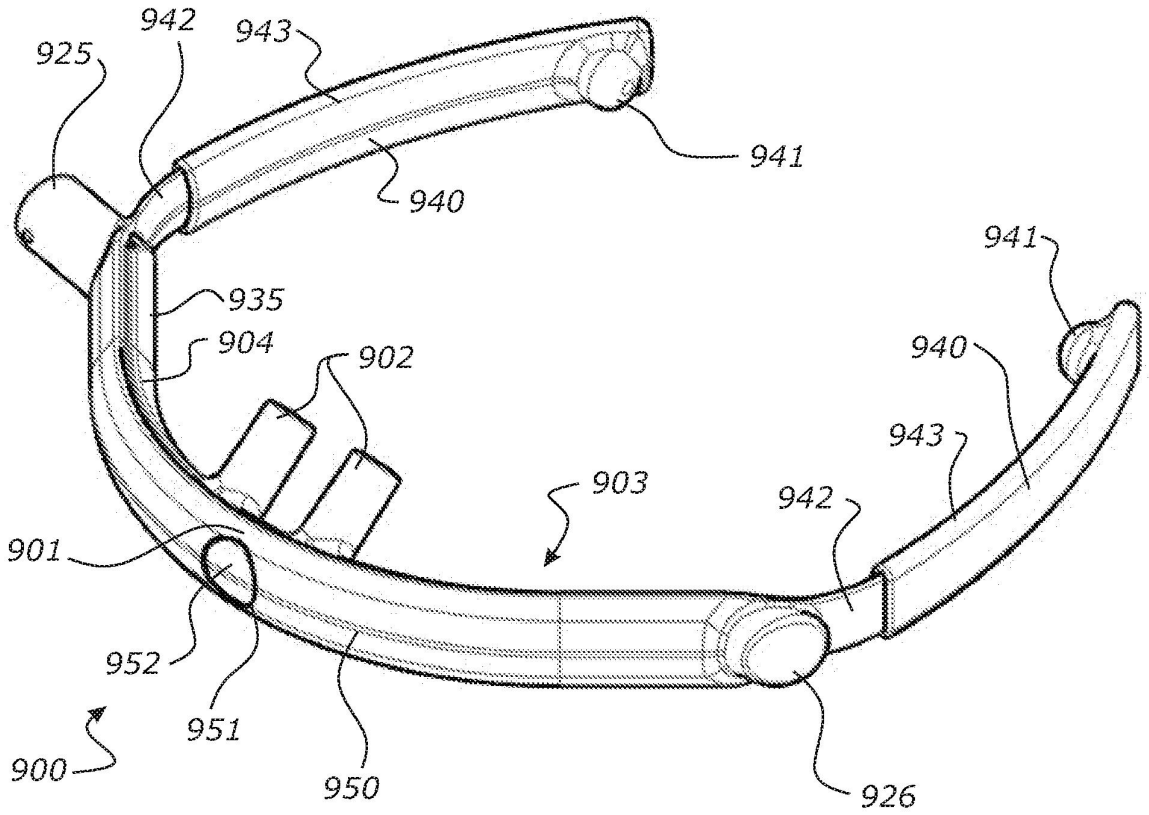
942
943
925
941
940
941
935
904
902
940
943
903
942
901
952
951
900
950
926

FIGURE 16A

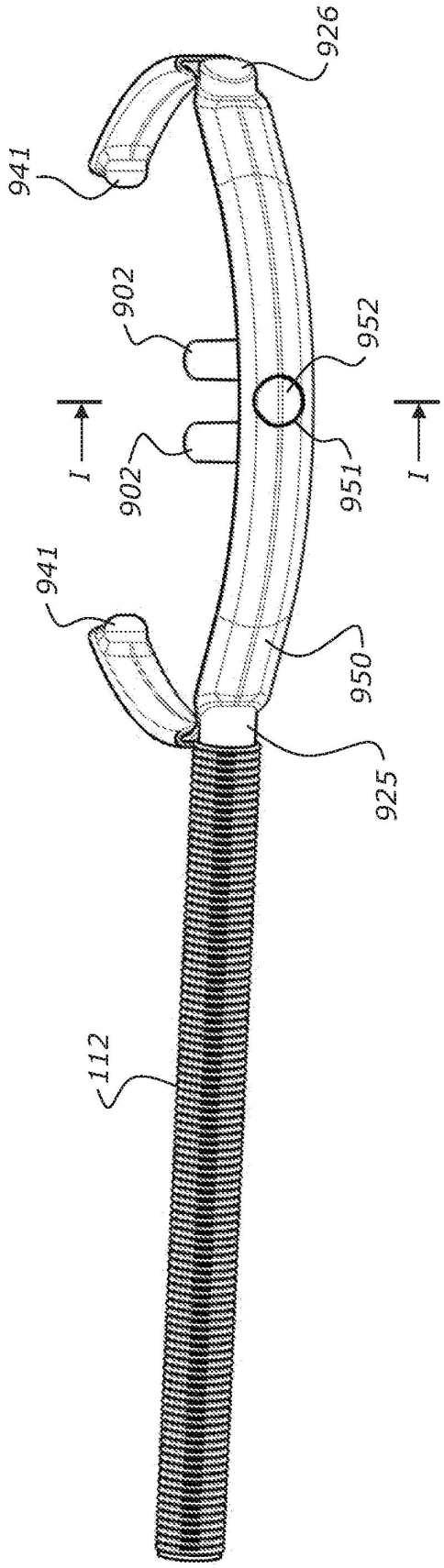

FIGURE 16B

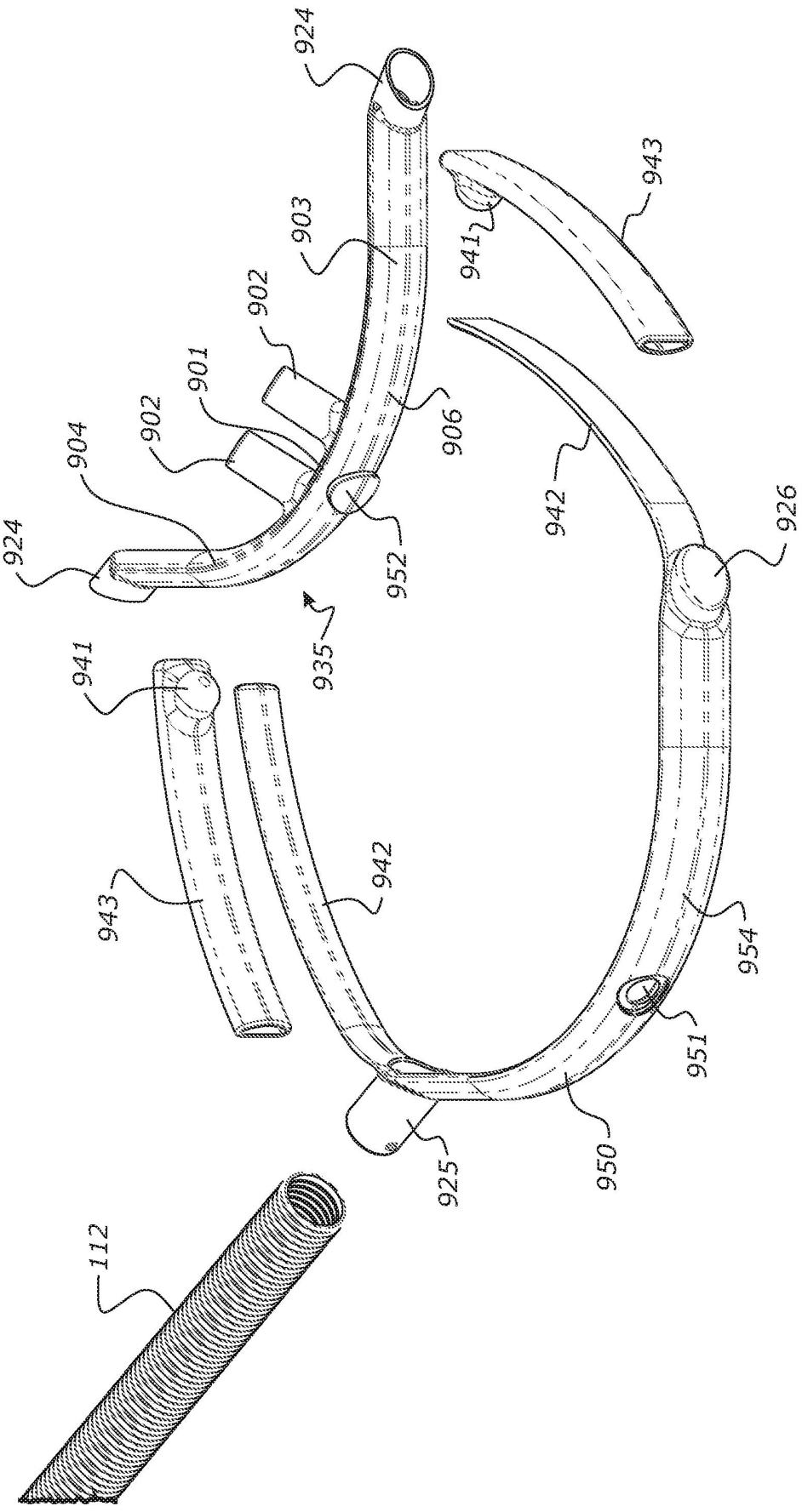
924
903
902
901
902
904
924
906
941
943
942
926
952
935
941
943
942
954
951
925
950
112

FIGURE 16C

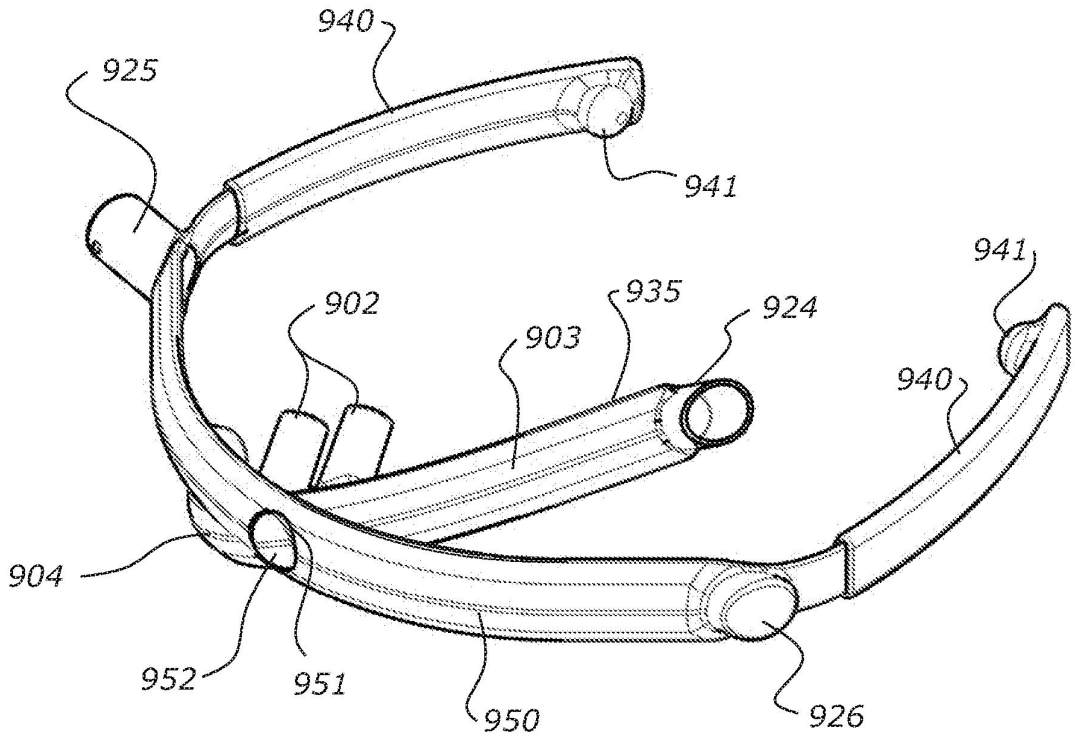

FIGURE 16D

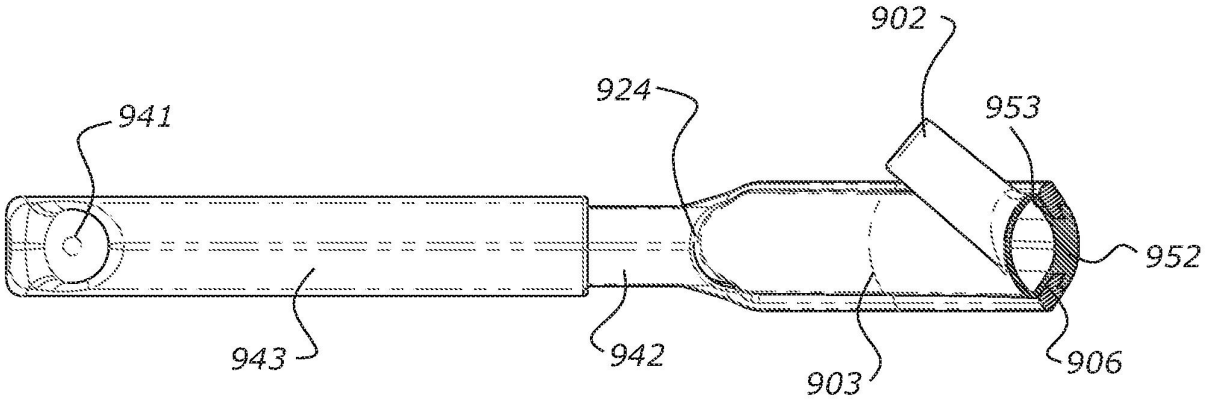

FIGURE 16E

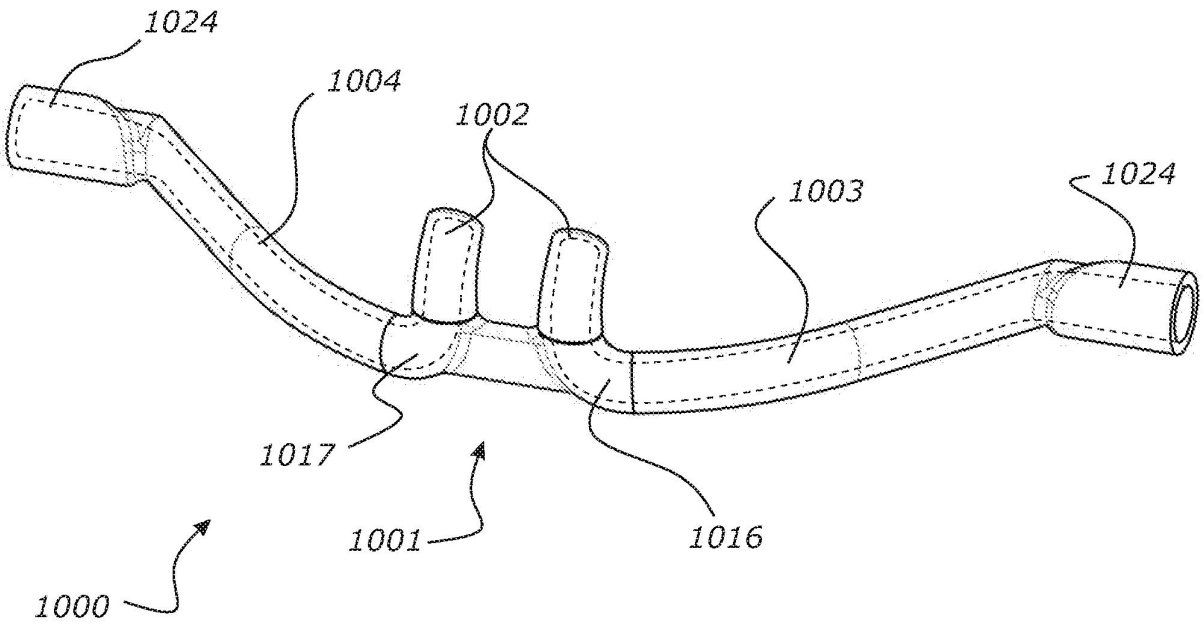

FIGURE 17

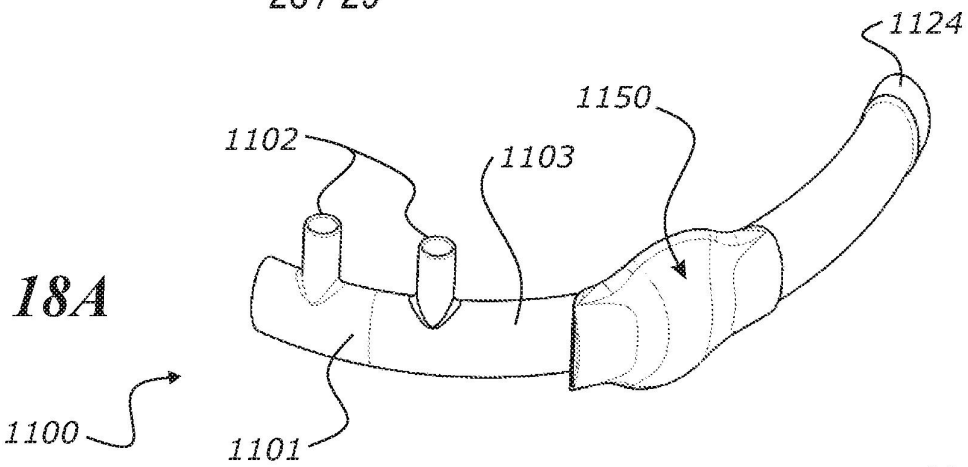

FIGURE 18A

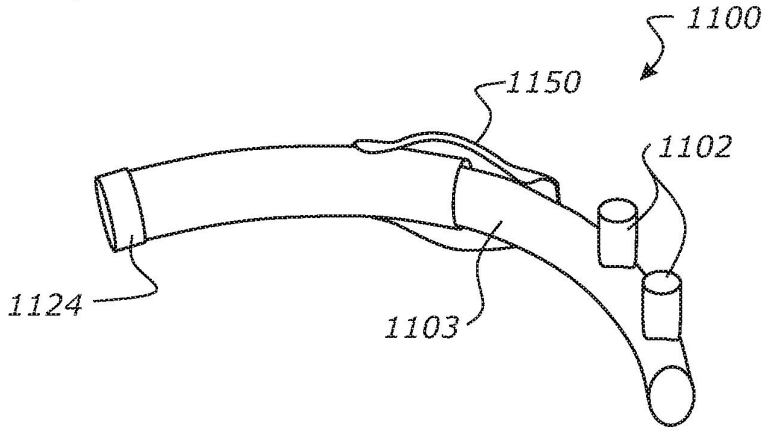

FIGURE 18B

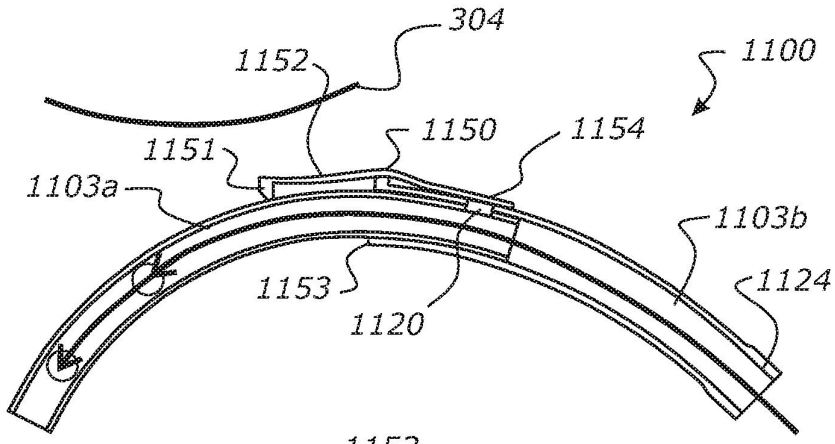

FIGURE 18C

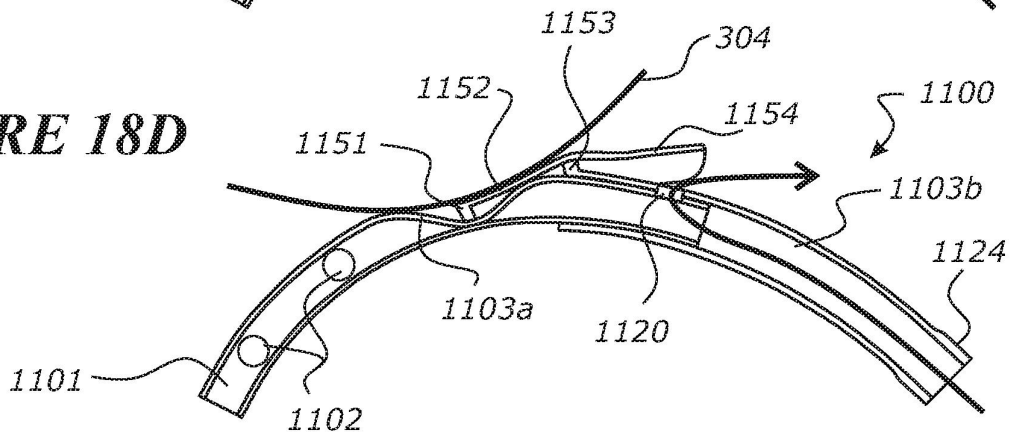

FIGURE 18D

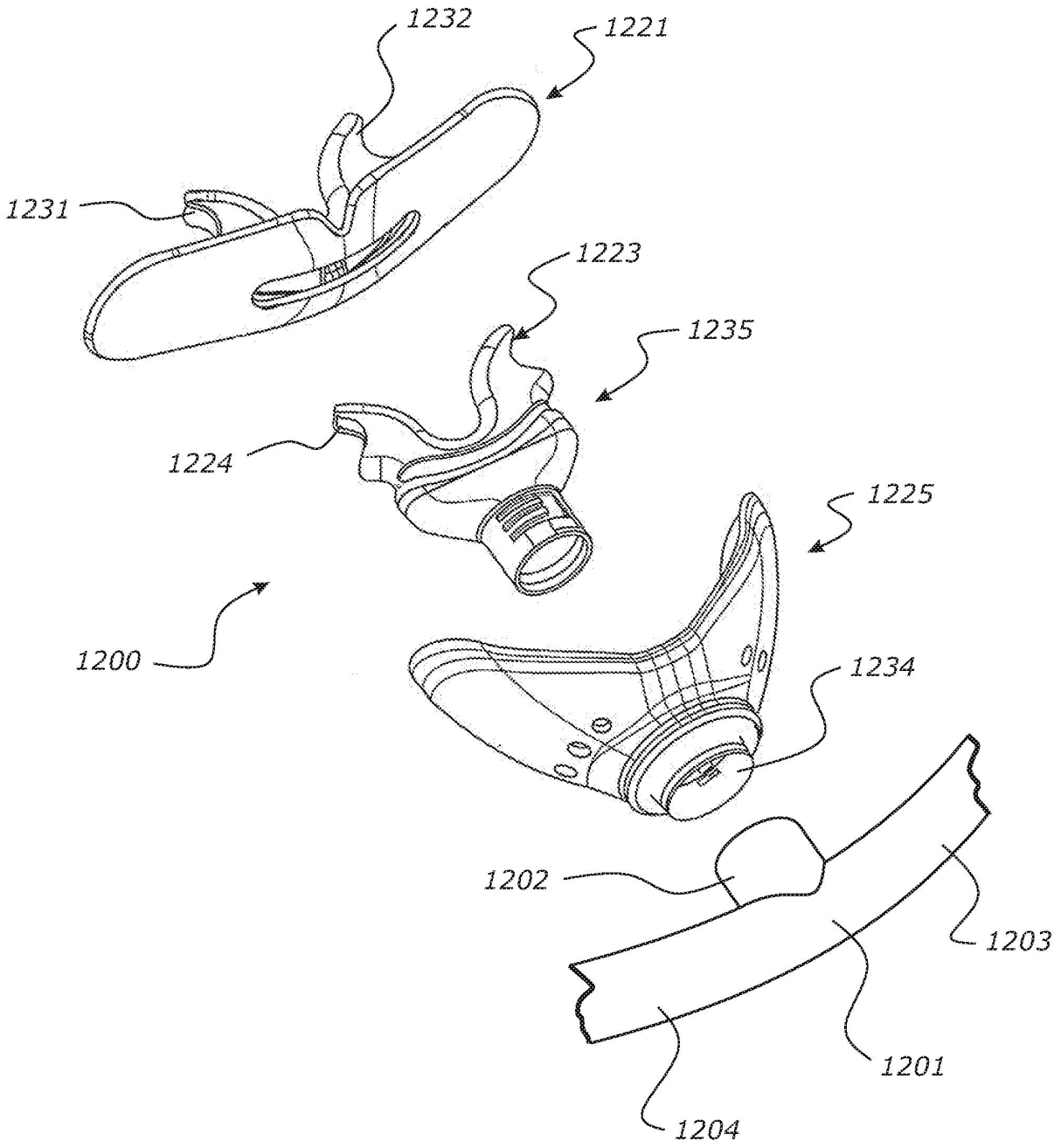
1232
1221
1231
1223
1235
1224
1225
1200
1234
1202
1203
1201
1204

FIGURE 19