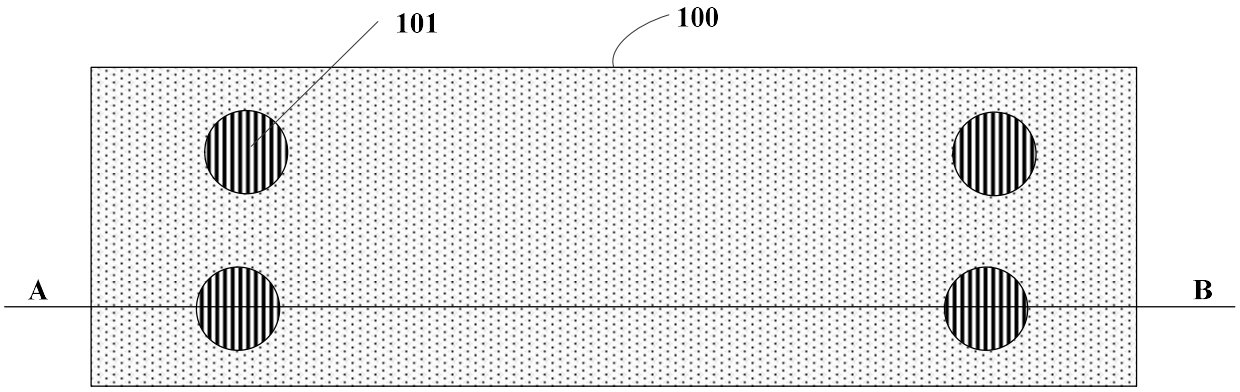

FIG. 1

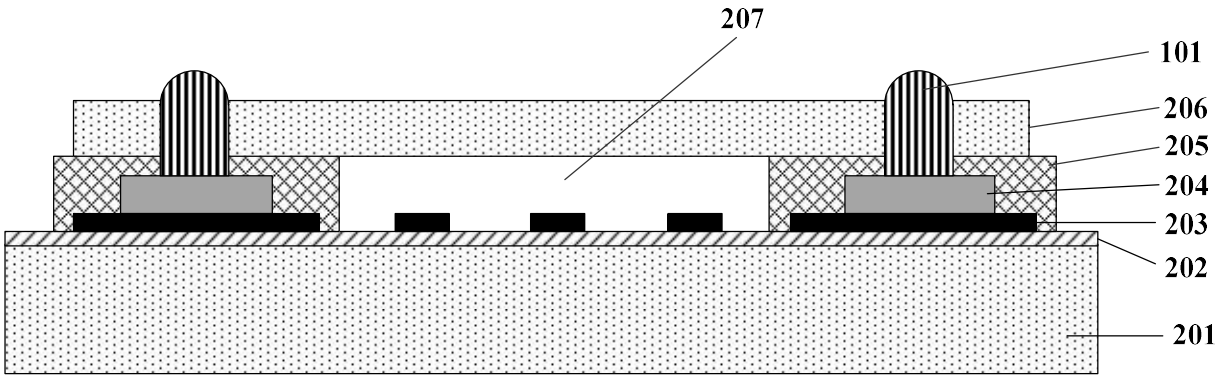

FIG. 2

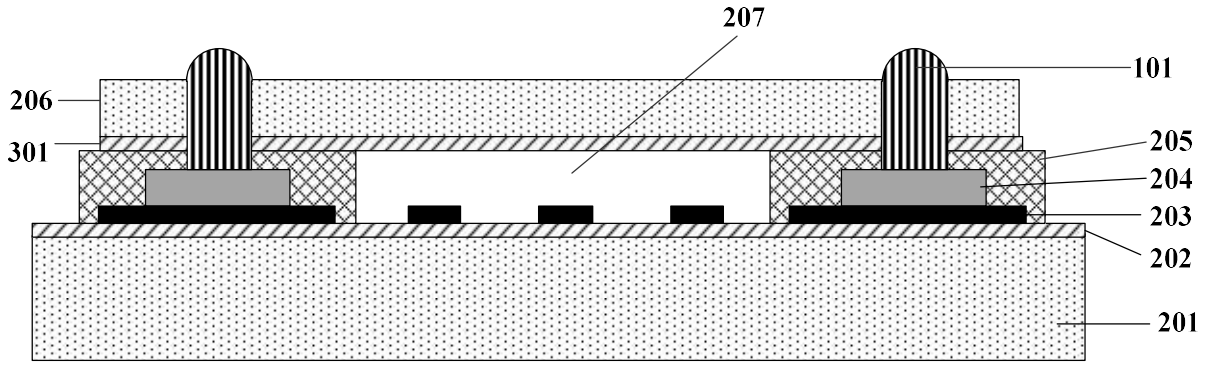

FIG. 3

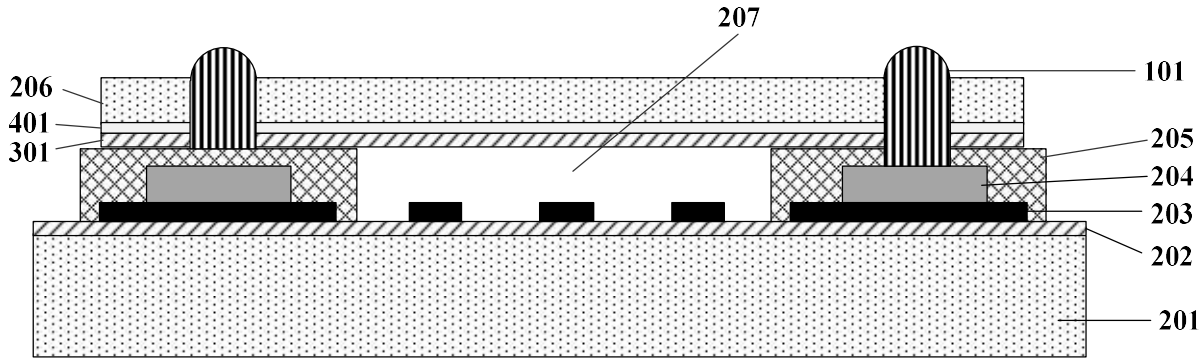

FIG. 4

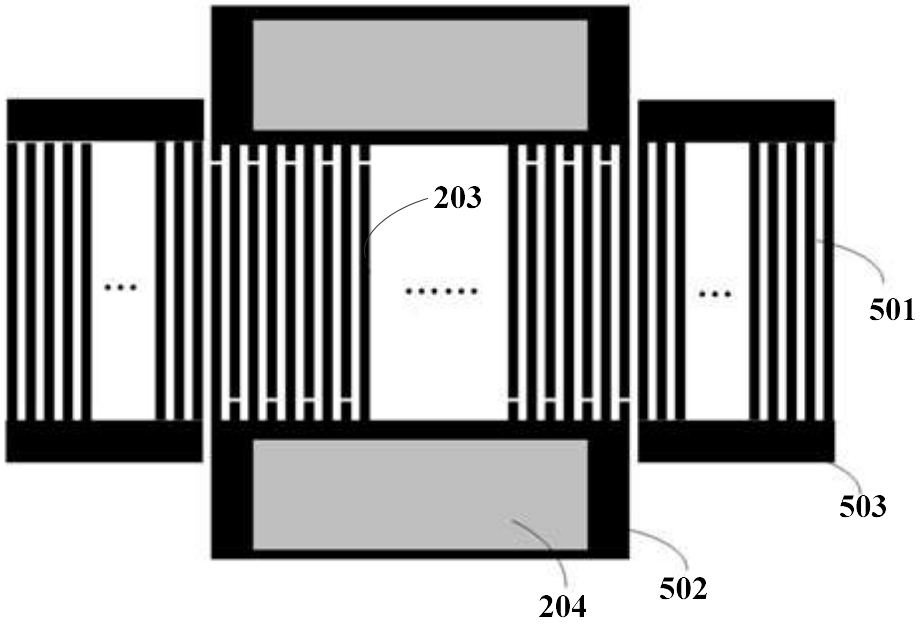

FIG. 5

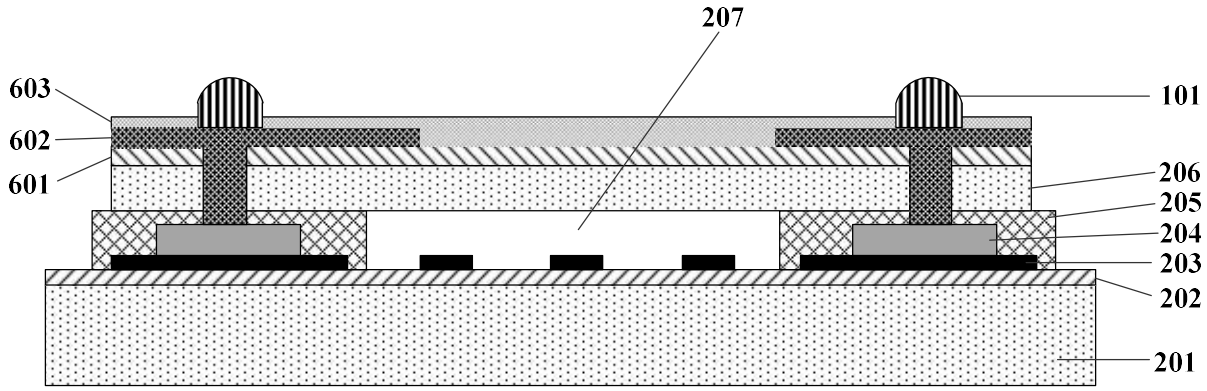

FIG. 6

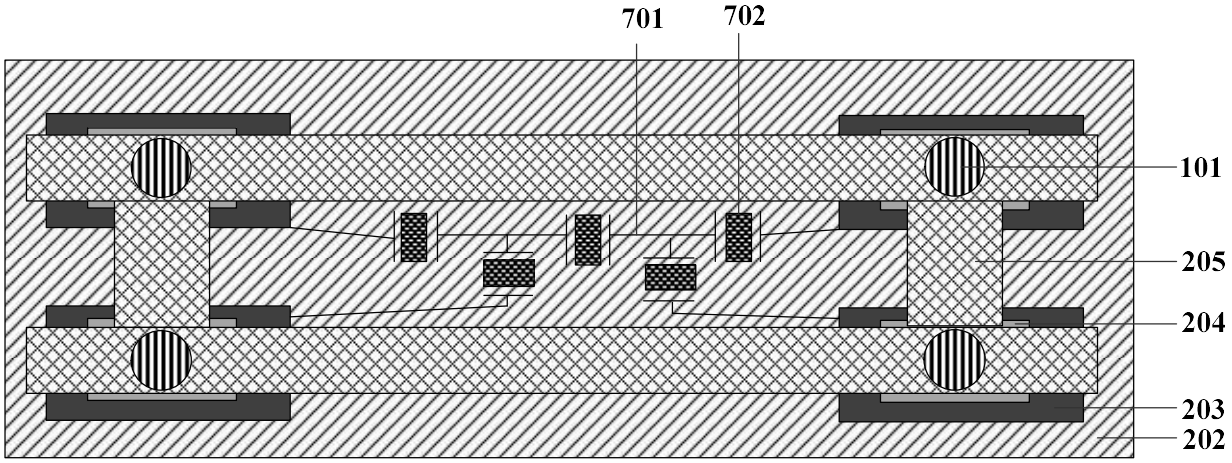
701
702
101
205
204
203
202

FIG. 7

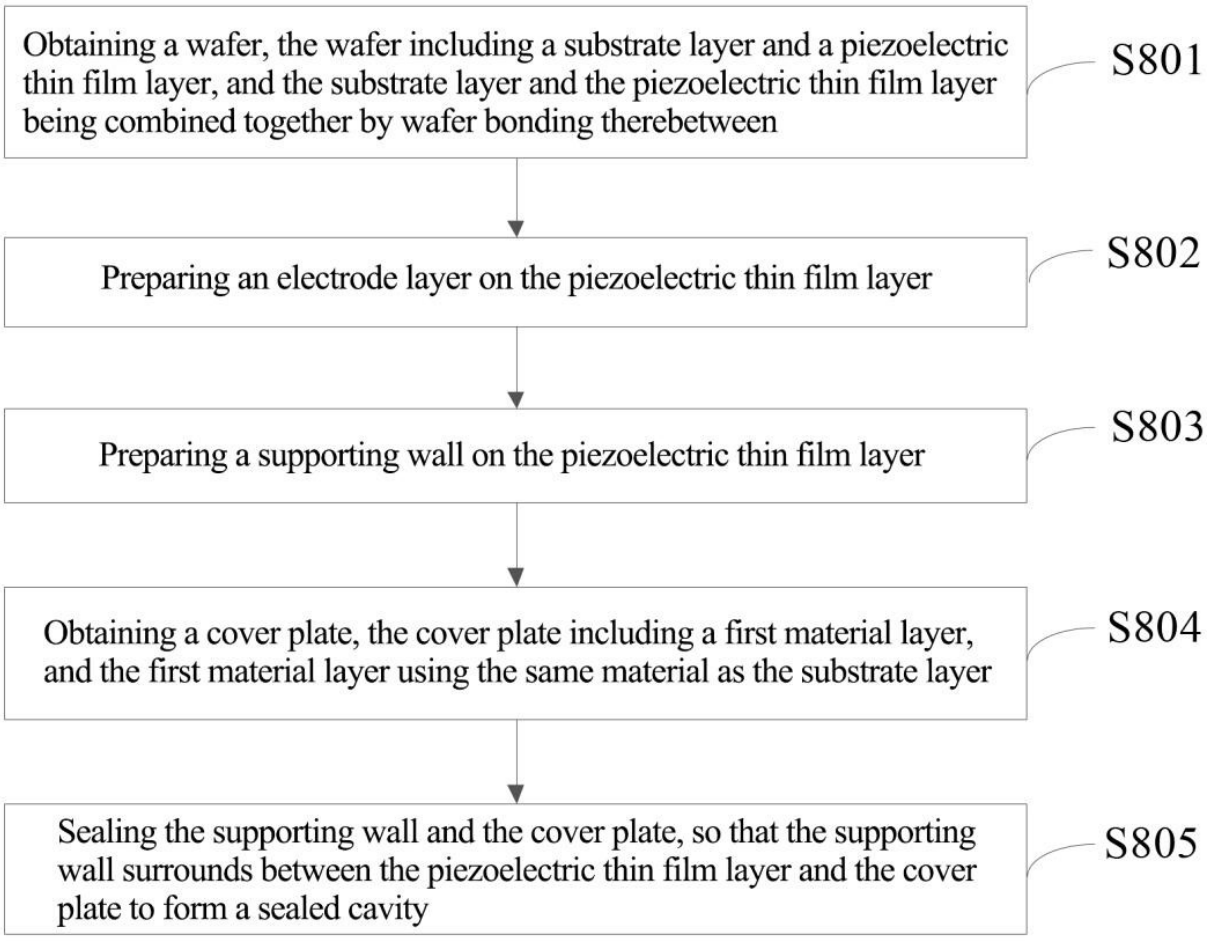
Obtaining a wafer, the wafer including a substrate layer and a piezoelectric thin film layer, and the substrate layer and the piezoelectric thin film layer being combined together by wafer bonding therebetween
S801
Preparing an electrode layer on the piezoelectric thin film layer
S802
Preparing a supporting wall on the piezoelectric thin film layer
S803
Obtaining a cover plate, the cover plate including a first material layer, and the first material layer using the same material as the substrate layer
S804
Sealing the supporting wall and the cover plate, so that the supporting wall surrounds between the piezoelectric thin film layer and the cover plate to form a sealed cavity
S805

FIG. 8

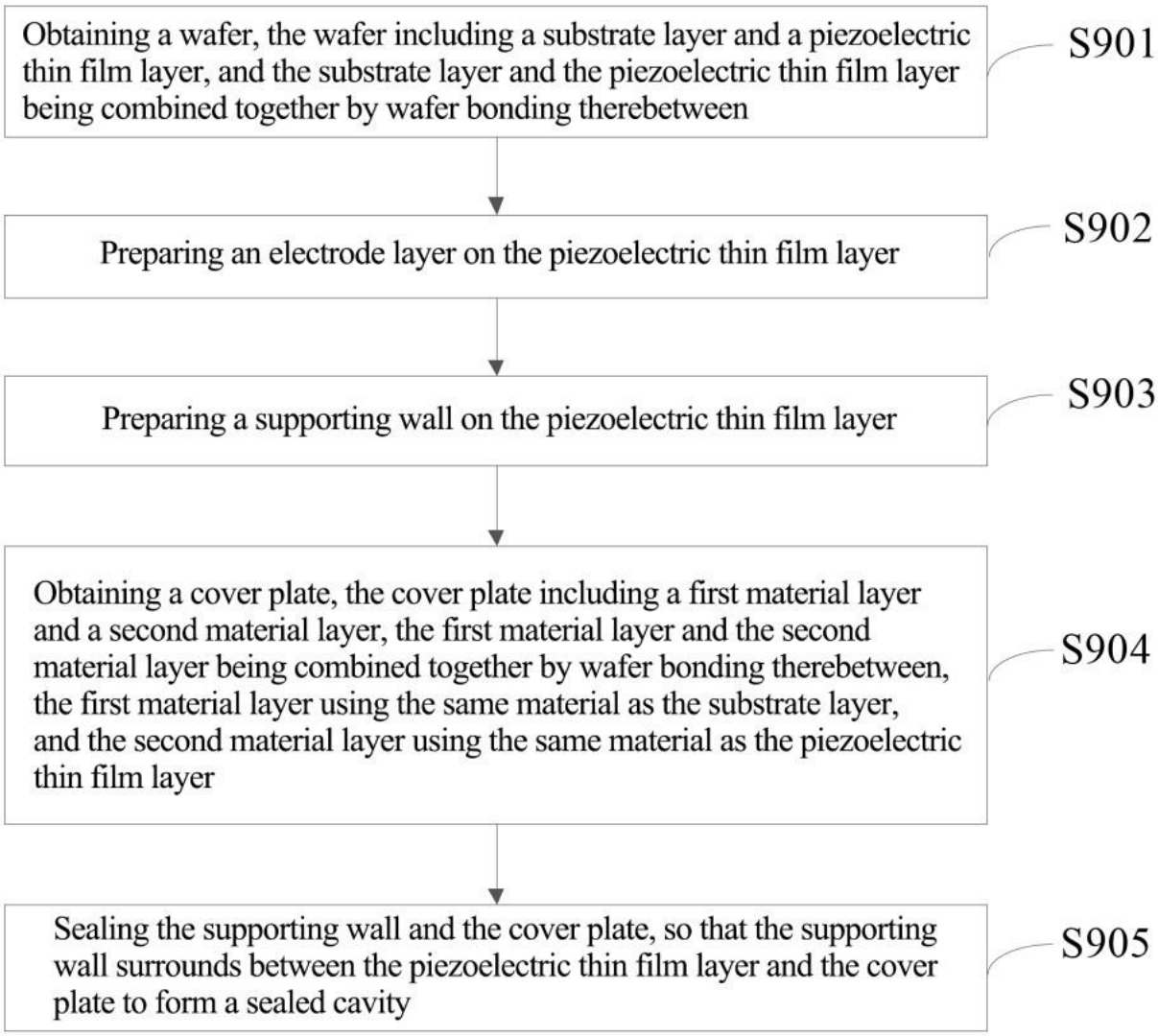
Obtaining a wafer, the wafer including a substrate layer and a piezoelectric thin film layer, and the substrate layer and the piezoelectric thin film layer being combined together by wafer bonding therebetween
S901
Preparing an electrode layer on the piezoelectric thin film layer
S902
Preparing a supporting wall on the piezoelectric thin film layer
S903
Obtaining a cover plate, the cover plate including a first material layer and a second material layer, the first material layer and the second material layer being combined together by wafer bonding therebetween, the first material layer using the same material as the substrate layer, and the second material layer using the same material as the piezoelectric thin film layer
S904
Sealing the supporting wall and the cover plate, so that the supporting wall surrounds between the piezoelectric thin film layer and the cover plate to form a sealed cavity
S905

FIG. 9

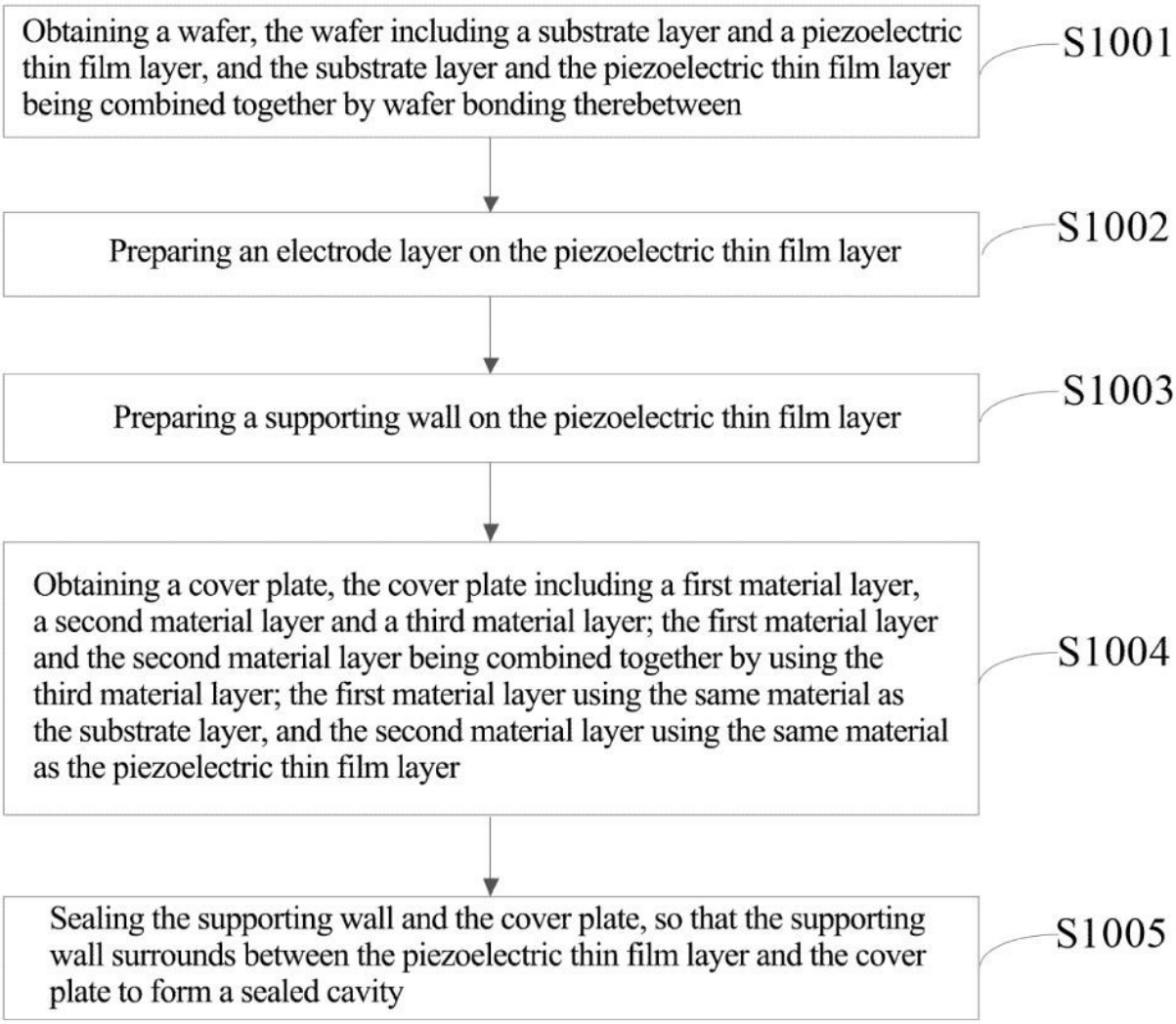
Obtaining a wafer, the wafer including a substrate layer and a piezoelectric thin film layer, and the substrate layer and the piezoelectric thin film layer being combined together by wafer bonding therebetween
S1001
Preparing an electrode layer on the piezoelectric thin film layer
S1002
Preparing a supporting wall on the piezoelectric thin film layer
S1003
Obtaining a cover plate, the cover plate including a first material layer, a second material layer and a third material layer; the first material layer and the second material layer being combined together by using the third material layer; the first material layer using the same material as the substrate layer, and the second material layer using the same material as the piezoelectric thin film layer
S1004
Sealing the supporting wall and the cover plate, so that the supporting wall surrounds between the piezoelectric thin film layer and the cover plate to form a sealed cavity
S1005

FIG. 10