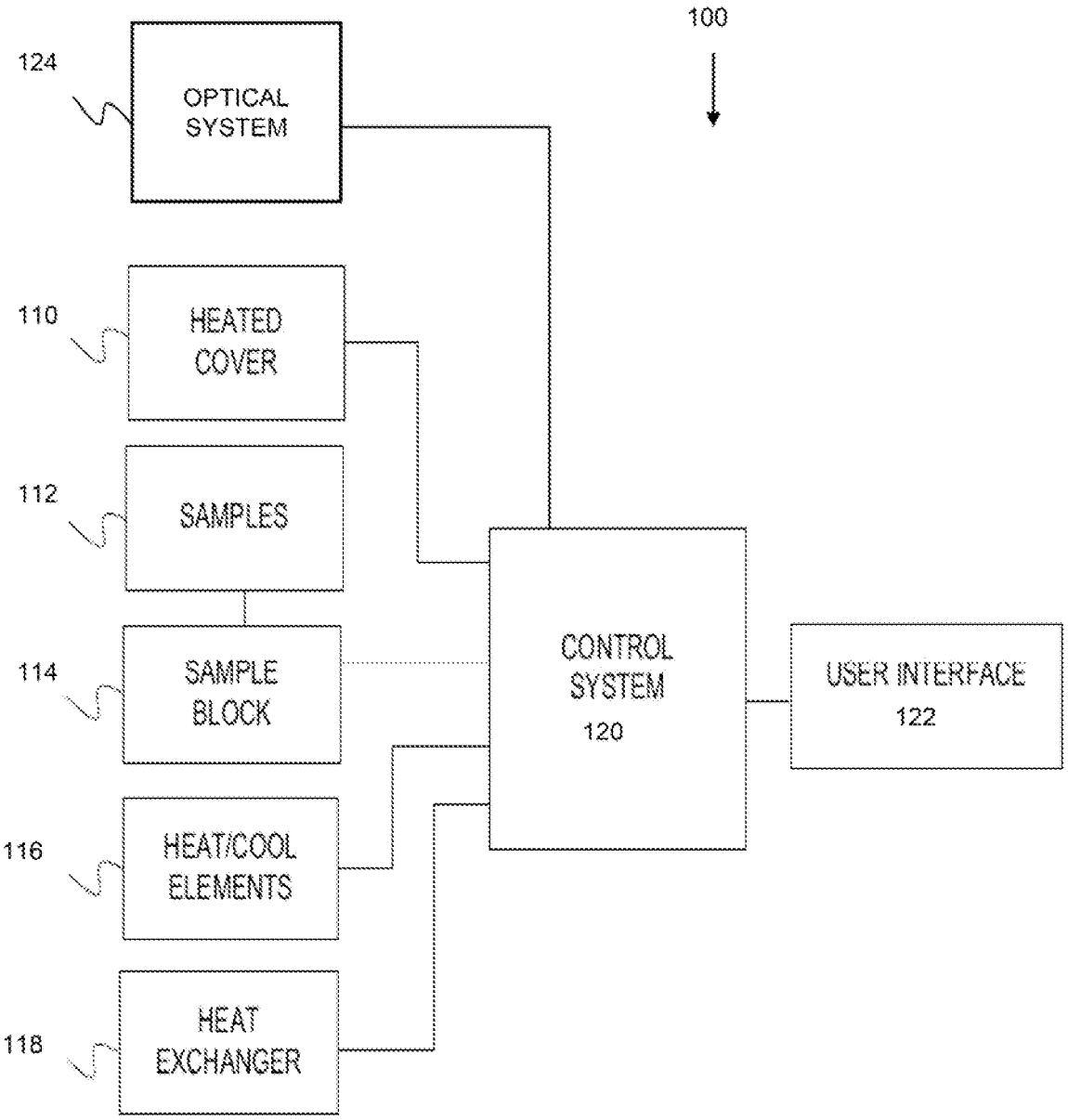
100
124
OPTICAL SYSTEM
110
HEATED COVER
112
SAMPLES
114
SAMPLE BLOCK
116
HEAT/COOL ELEMENTS
118
HEAT EXCHANGER
CONTROL SYSTEM
120
USER INTERFACE
122

FIG. 1

FIG. 2

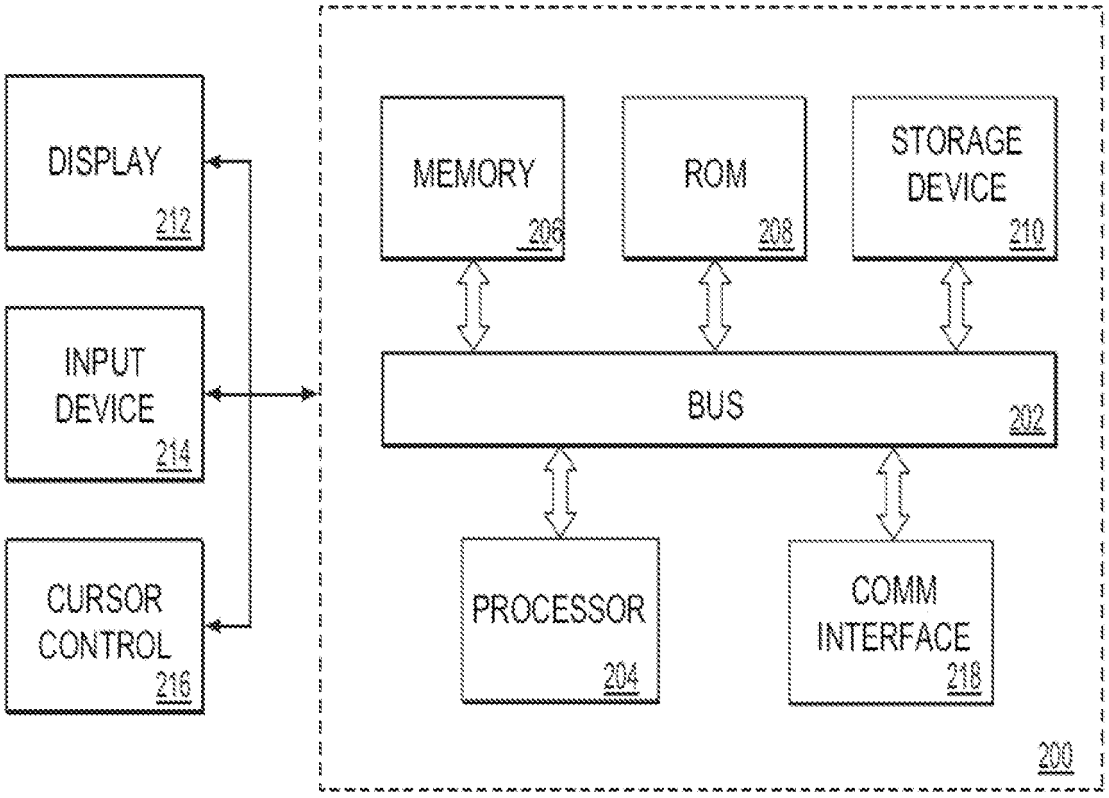
DISPLAY
212
INPUT DEVICE
214
CURSOR CONTROL
216
MEMORY
206
ROM
208
STORAGE DEVICE
210
BUS
202
PROCESSOR
204
COMM INTERFACE
218
200

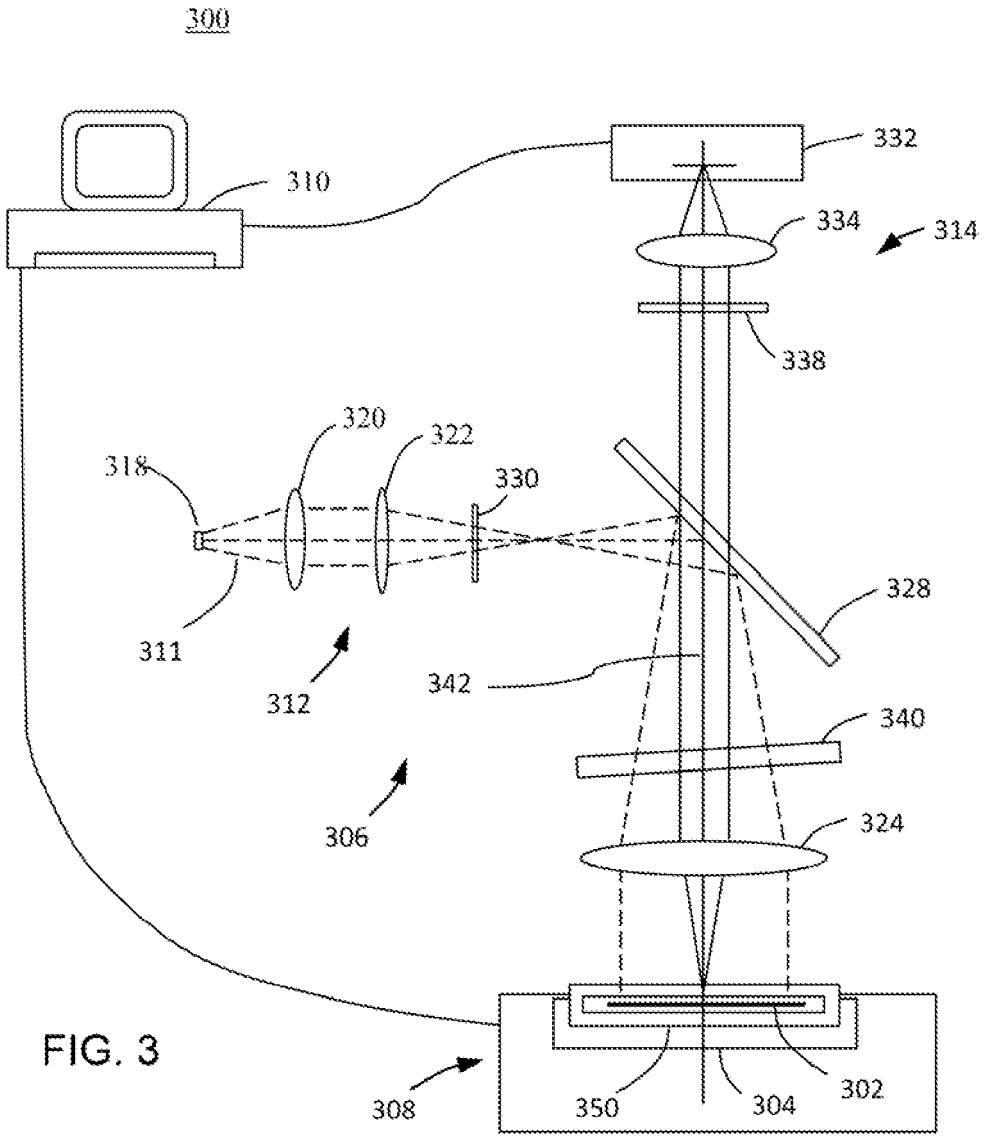
300
310
332
334
314
338
320
322
318
330
328
311
312
342
340
306
324
308
350
304
302

FIG. 3

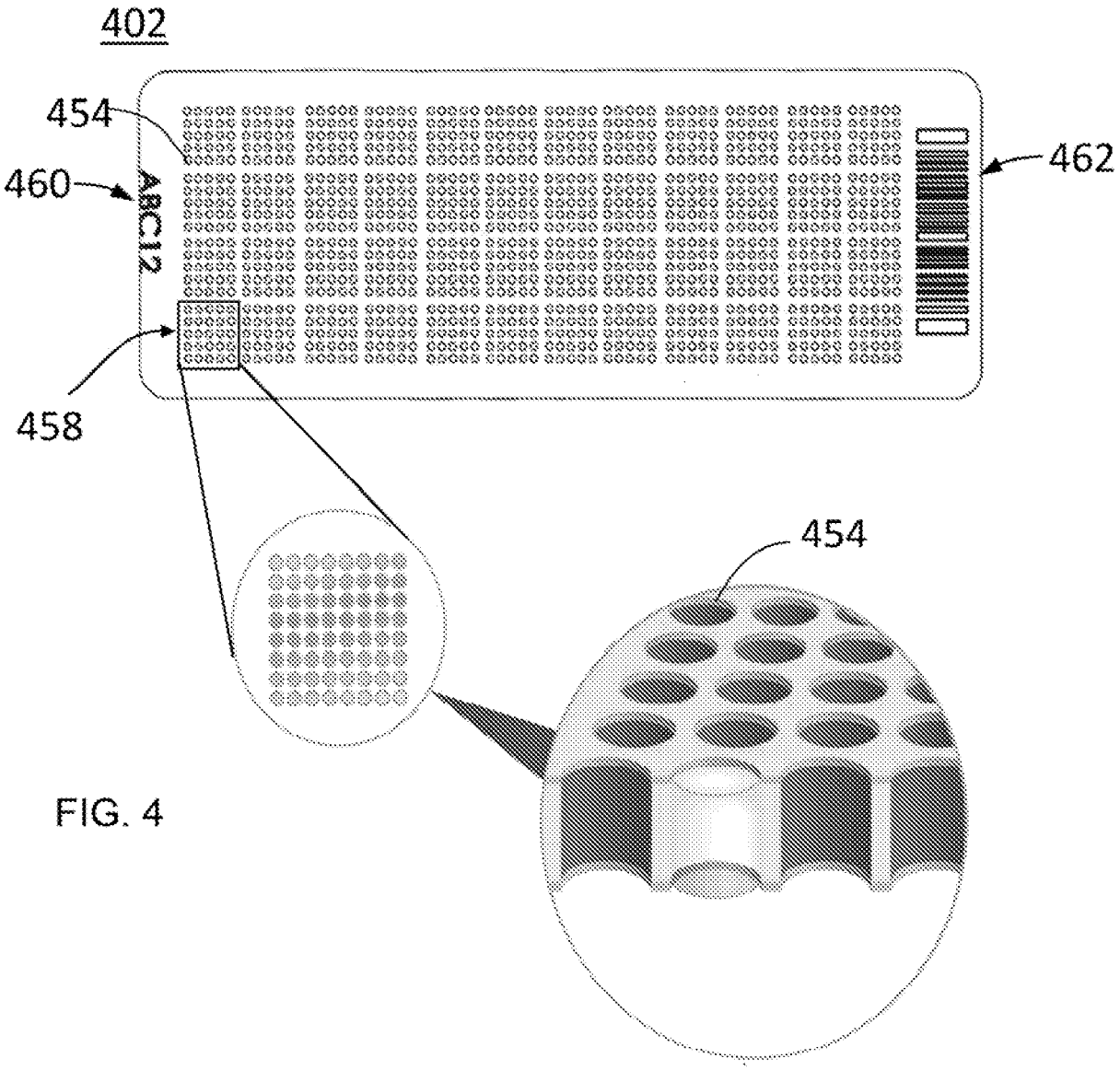

FIG. 4

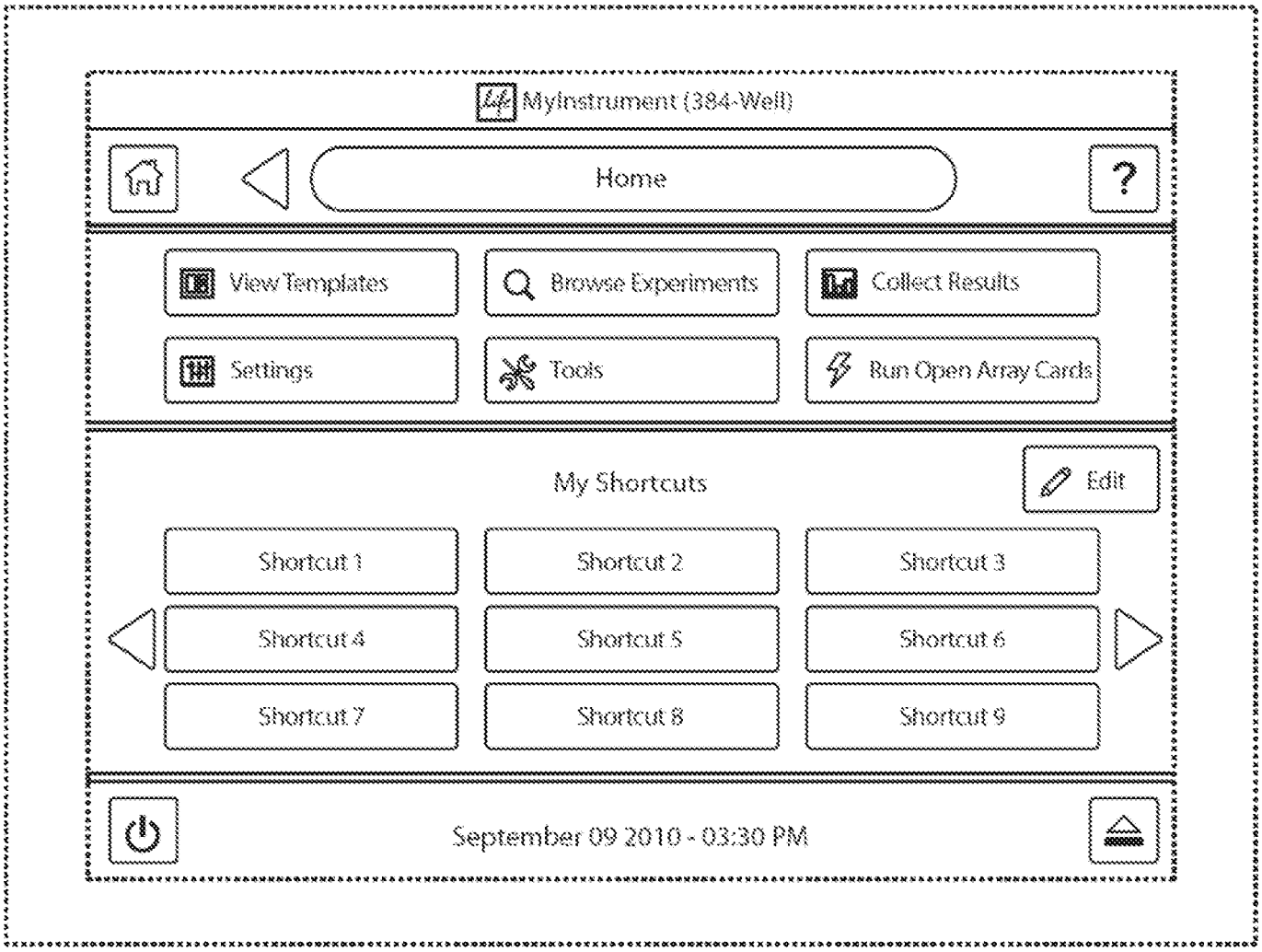
MyInstrument (384-Well)
Home
View Templates
Browse Experiments
Collect Results
Settings
Tools
Run Open Array Cards
My Shortcuts
Edit
Shortcut 1
Shortcut 2
Shortcut 3
Shortcut 4
Shortcut 5
Shortcut 6
Shortcut 7
Shortcut 8
Shortcut 9
September 09 2010 - 03:30 PM

FIG. 5

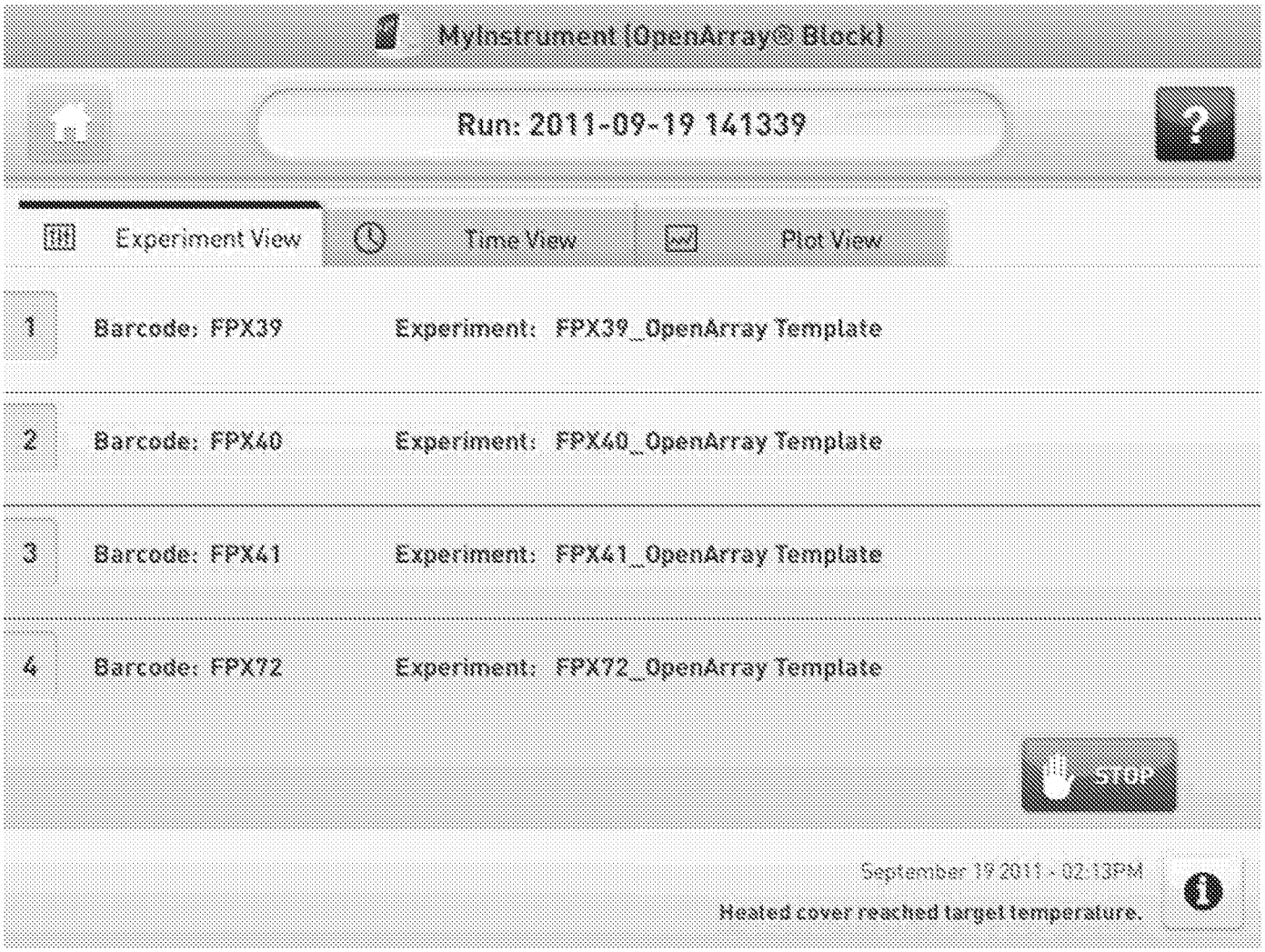
MyInstrument (OpenArray® Block)
Run: 2011-09-19 141339
Experiment View
Time View
Plot View
1
Barcode: FPX39
Experiment: FPX39_OpenArray Template
2
Barcode: FPX40
Experiment: FPX40_OpenArray Template
3
Barcode: FPX41
Experiment: FPX41_OpenArray Template
4
Barcode: FPX72
Experiment: FPX72_OpenArray Template
STOP
September 19 2011 - 02:13PM
Heated cover reached target temperature.

FIG. 6

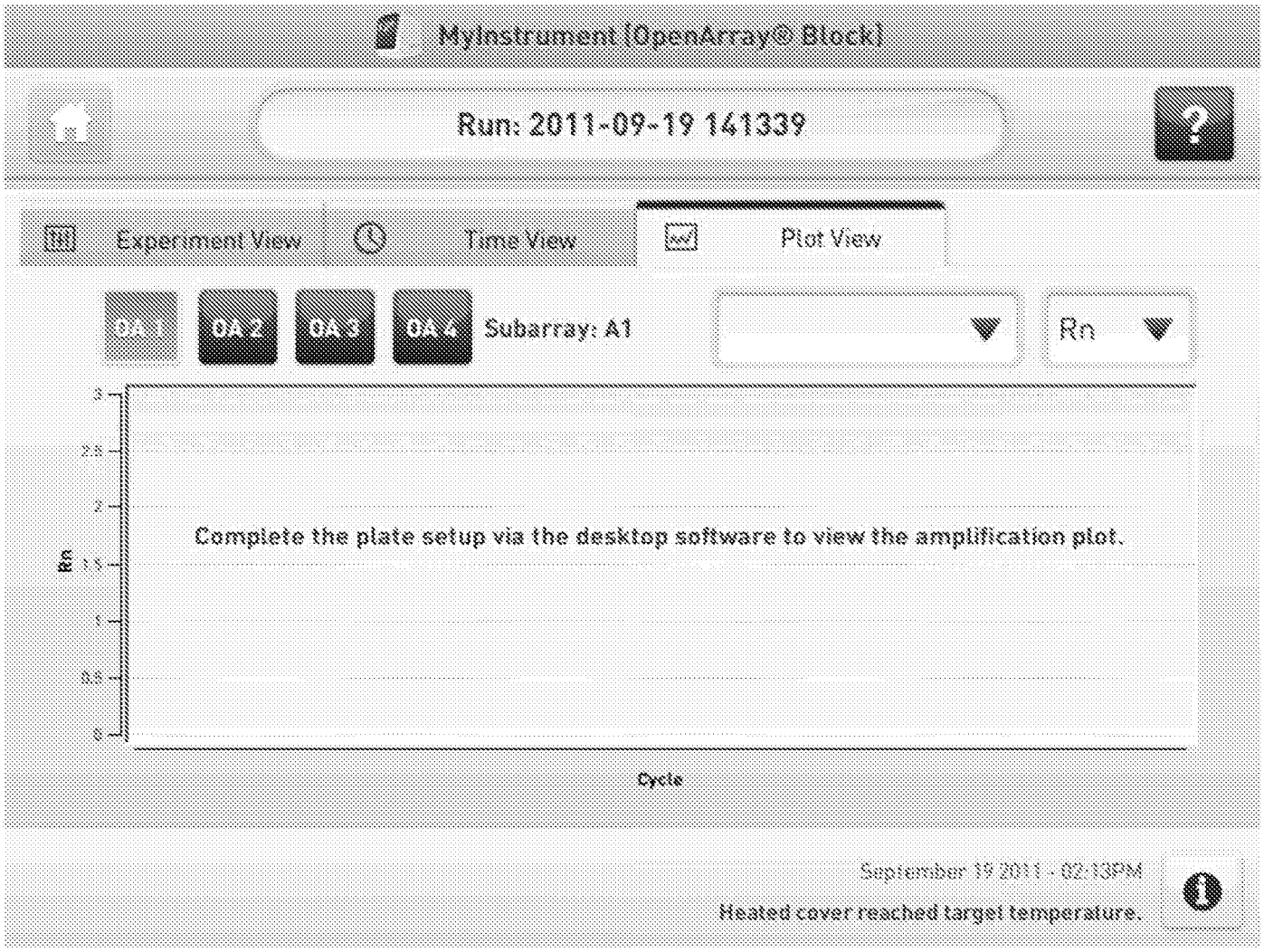
MyInstrument (OpenArray® Block)
Run: 2011-09-19 141339
Experiment View
Time View
Plot View
OA 1
OA 2
OA 3
OA 4
Subarray: A1
Rn
Complete the plate setup via the desktop software to view the amplification plot.
Cycle
September 19 2011 - 02:13PM
Heated cover reached target temperature.

FIG. 7

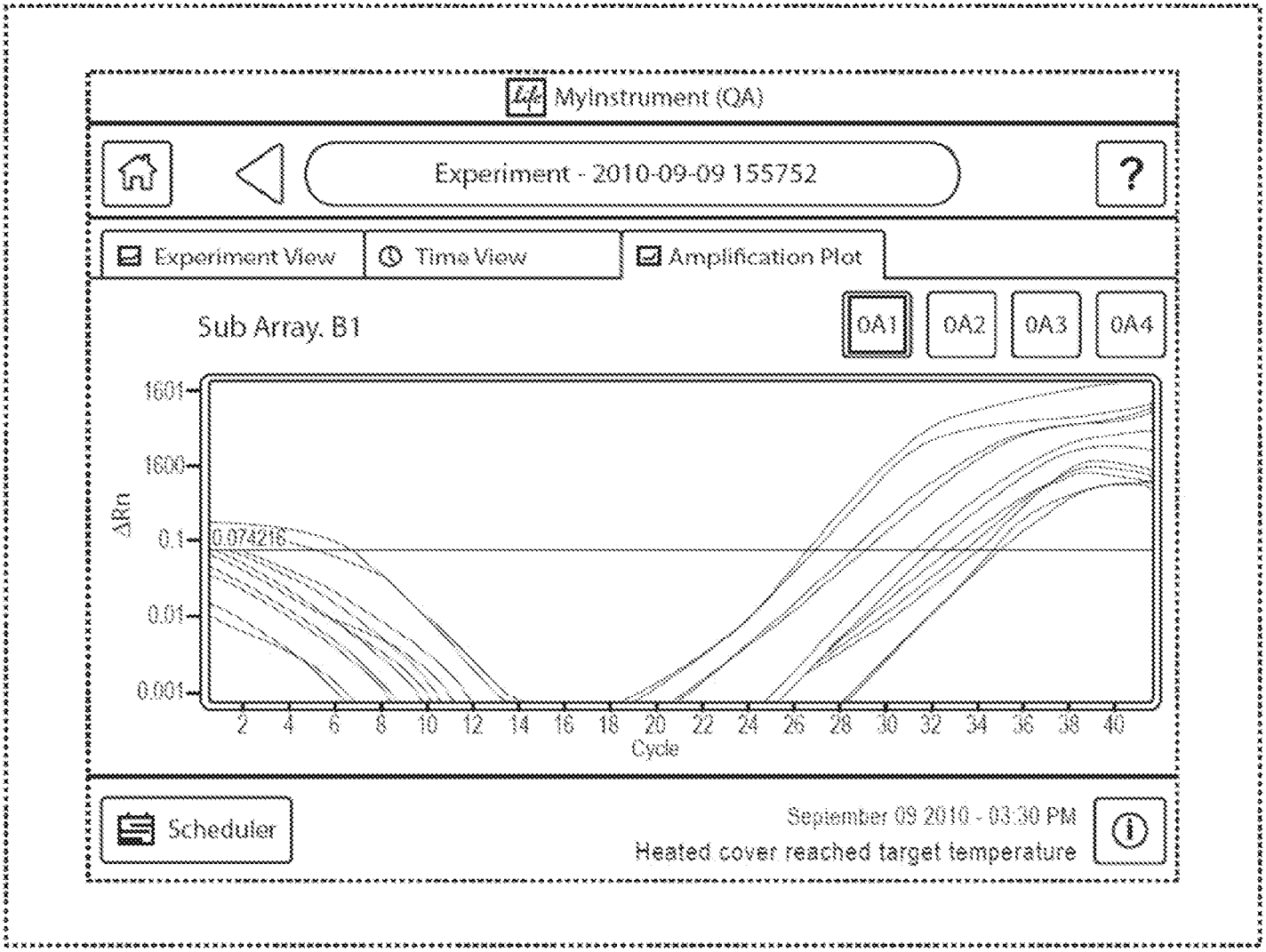
MyInstrument (QA)
Experiment - 2010-09-09 155752
Experiment View
Time View
Amplification Plot
Sub Array. B1
0A1
0A2
0A3
0A4
1601
1600
0.1
0.01
0.001
ΔRn
0.074216
2 4 6 8 10 12 14 16 18 20 22 24 26 28 30 32 34 36 38 40
Cycle
Scheduler
September 09 2010 - 03:30 PM
Heated cover reached target temperature

FIG. 8

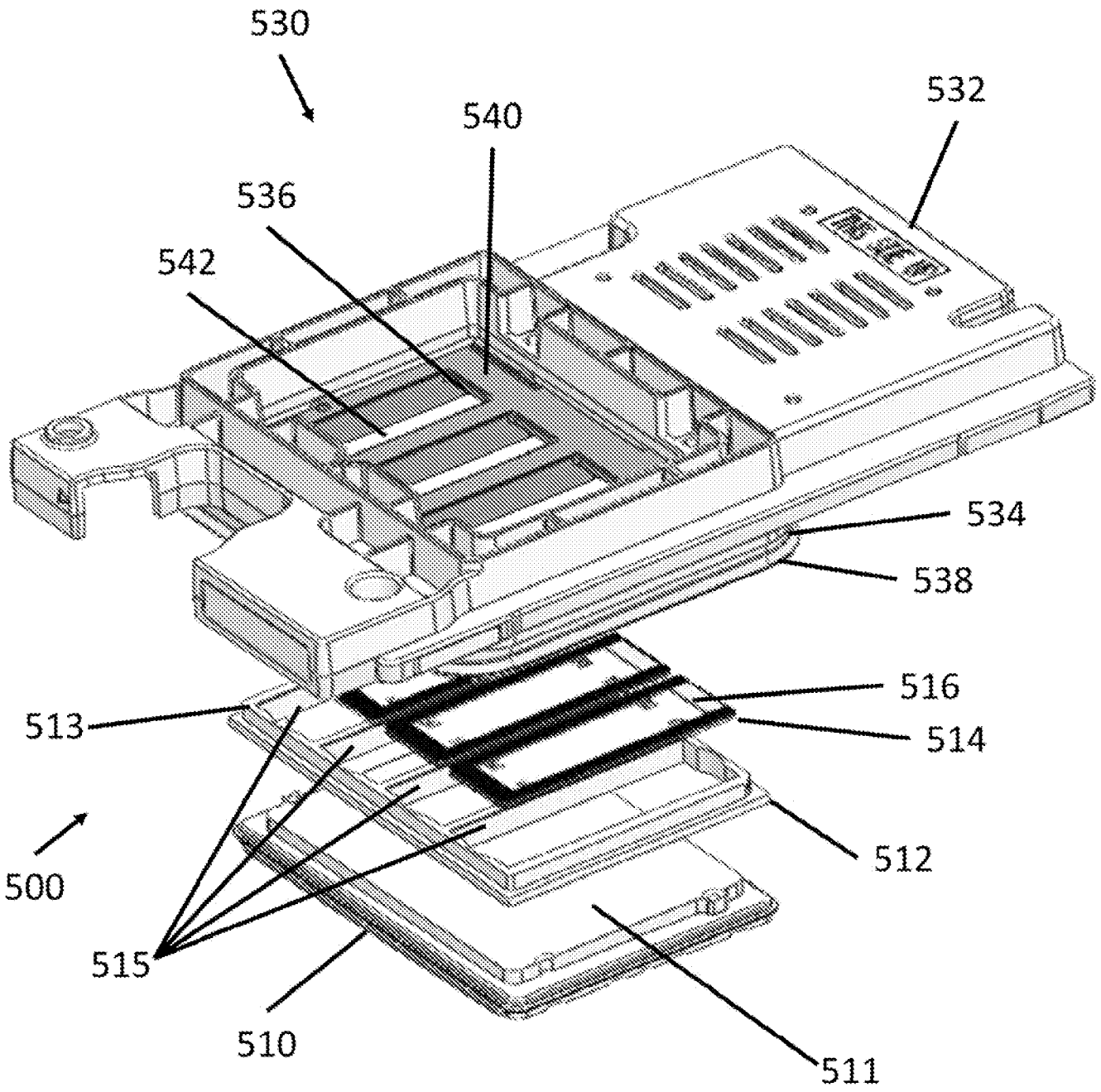

FIG. 9A

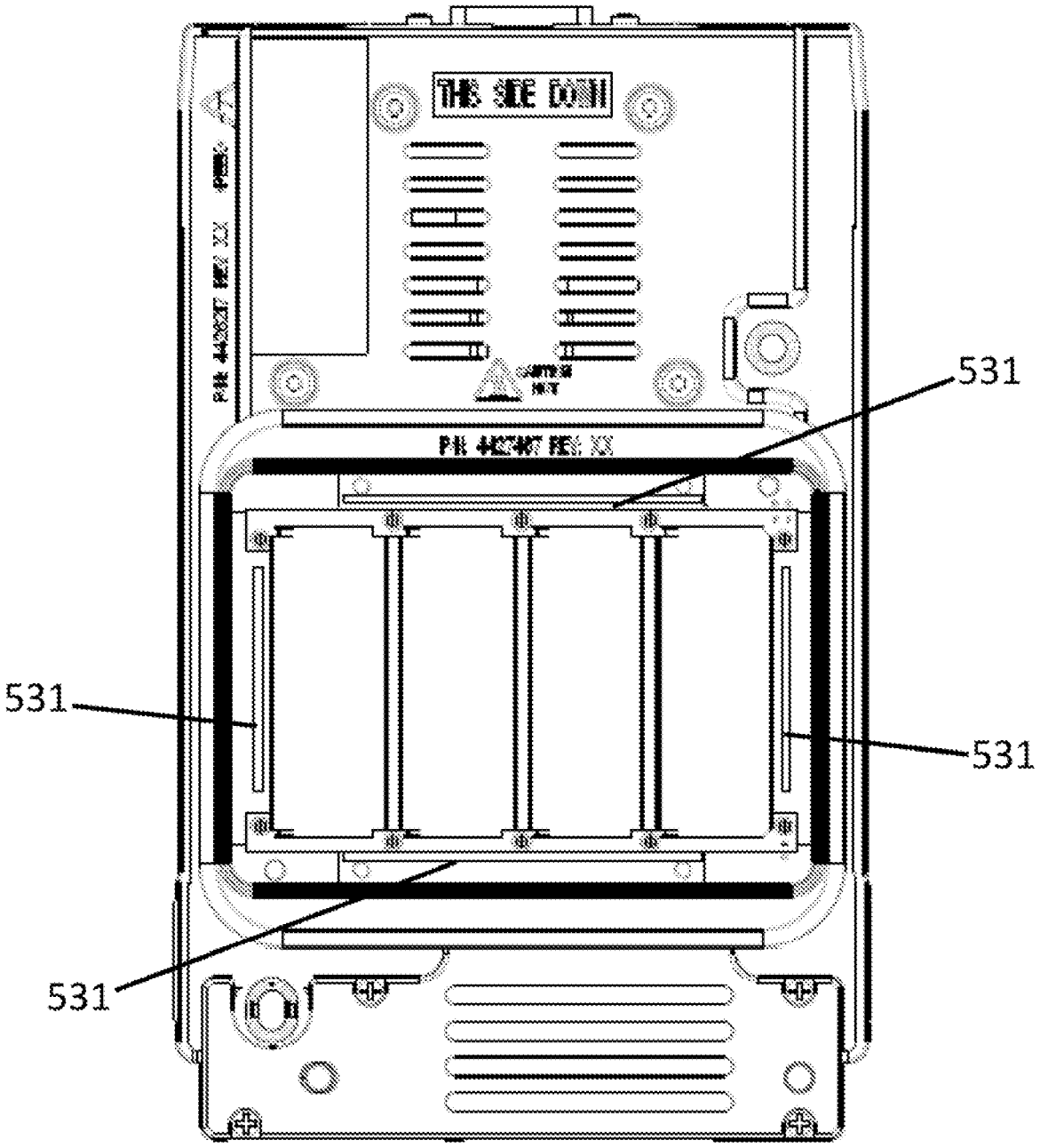

FIG. 9B

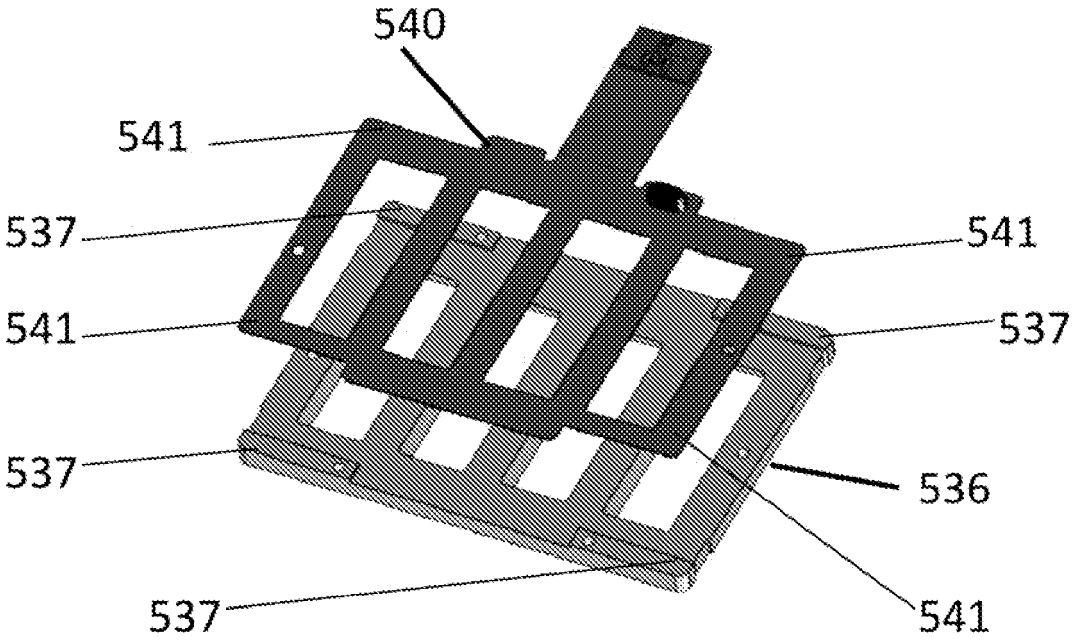

FIG. 10A

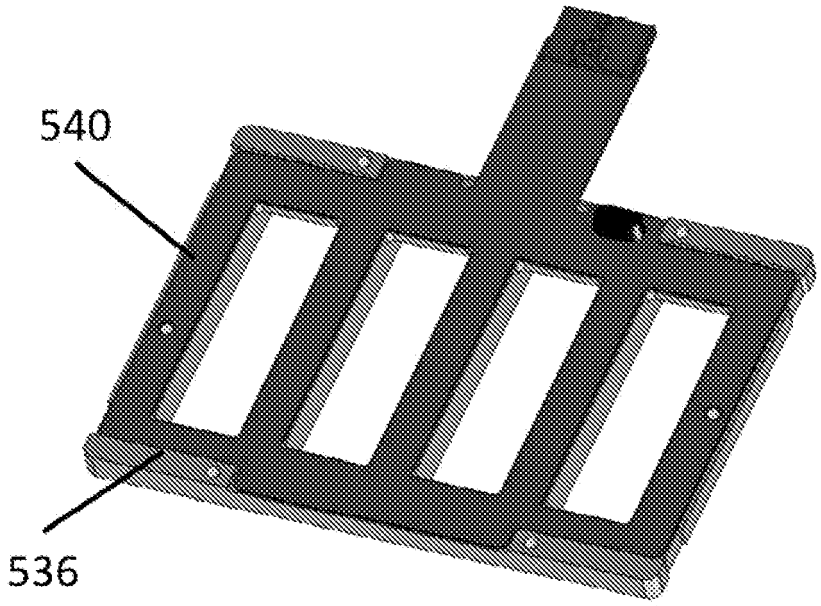

FIG. 10B

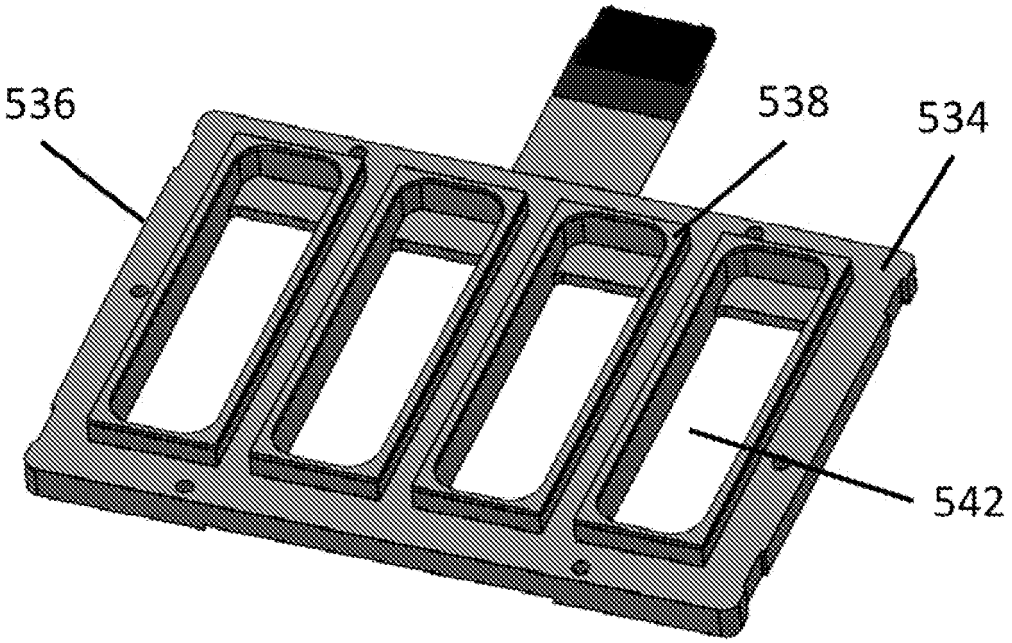

FIG. 11

FIG. 12

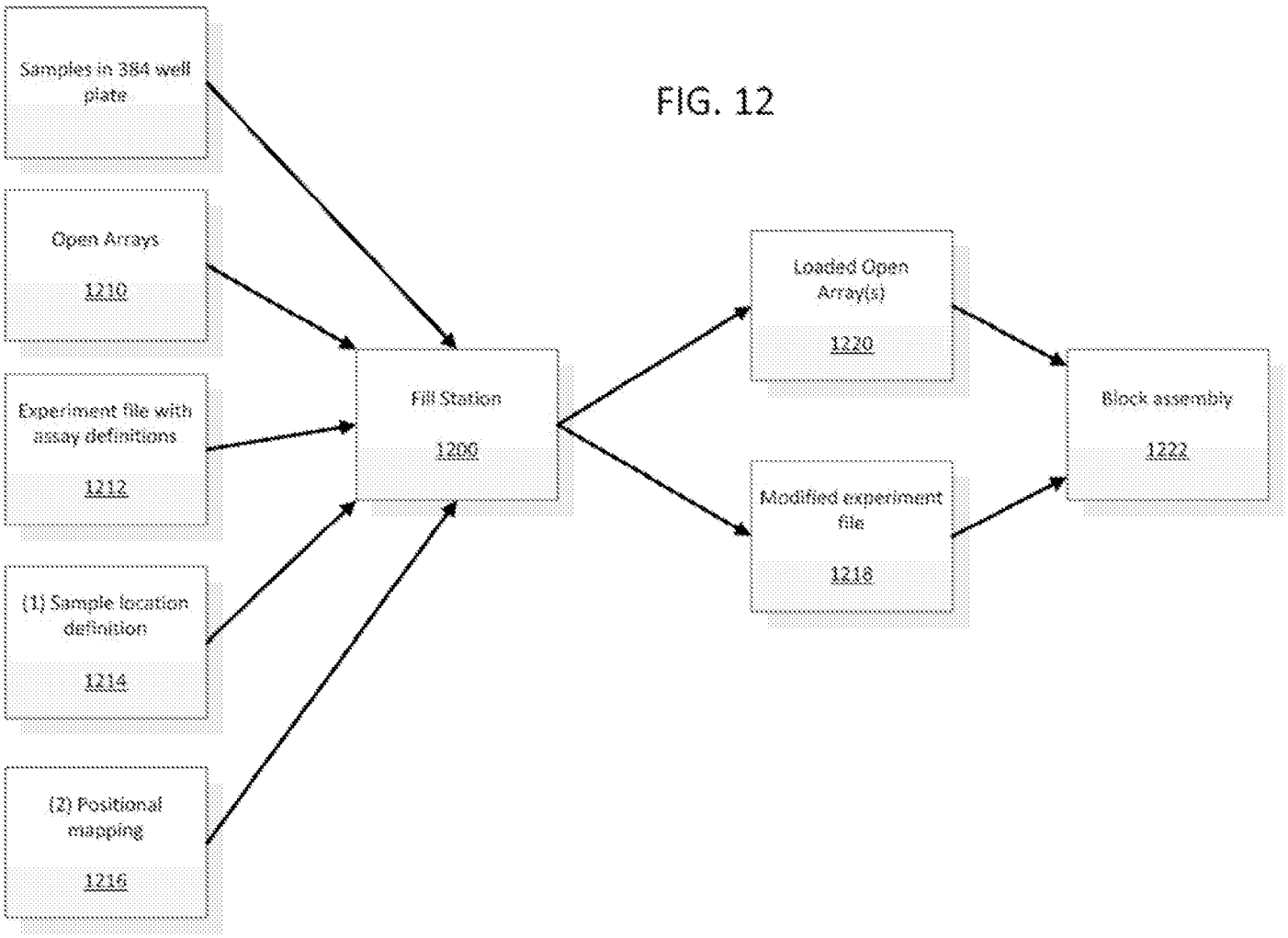
Samples in 384 well plate
Open Arrays
1210
Experiment file with assay definitions
1212
(1) Sample location definition
1214
(2) Positional mapping
1216
Fill Station
1200
Loaded Open Array(s)
1220
Modified experiment file
1218
Block assembly
1222

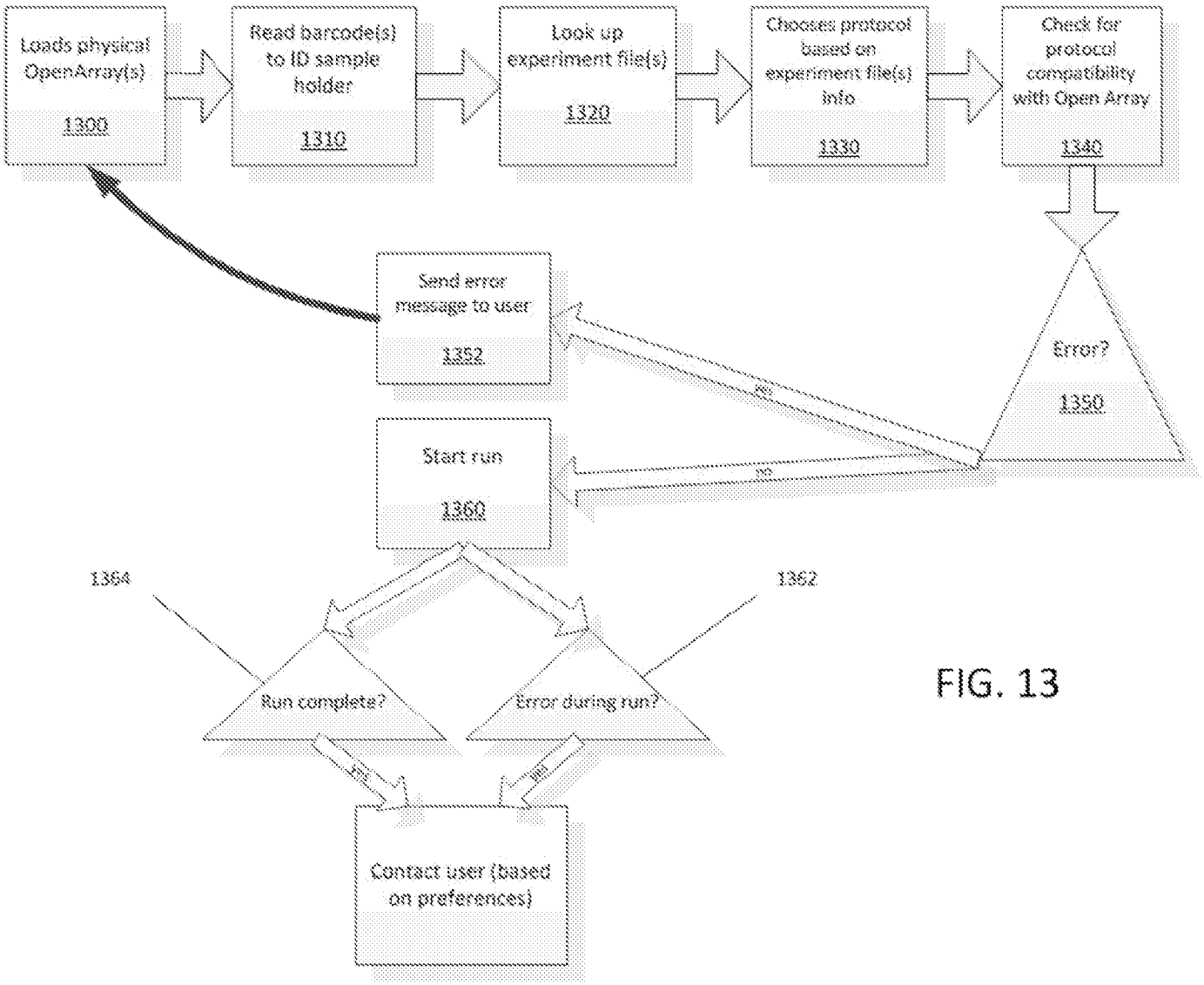
Loads physical OpenArray(s)
1300
Read barcode(s) to ID sample holder
1310
Look up experiment file(s)
1320
Chooses protocol based on experiment file(s) info
1330
Check for protocol compatibility with Open Array
1340
Error?
1350
yes
no
Send error message to user
1352
Start run
1360
1364
1362
Run complete?
Error during run?
yes
no
Contact user (based on preferences)

FIG. 13

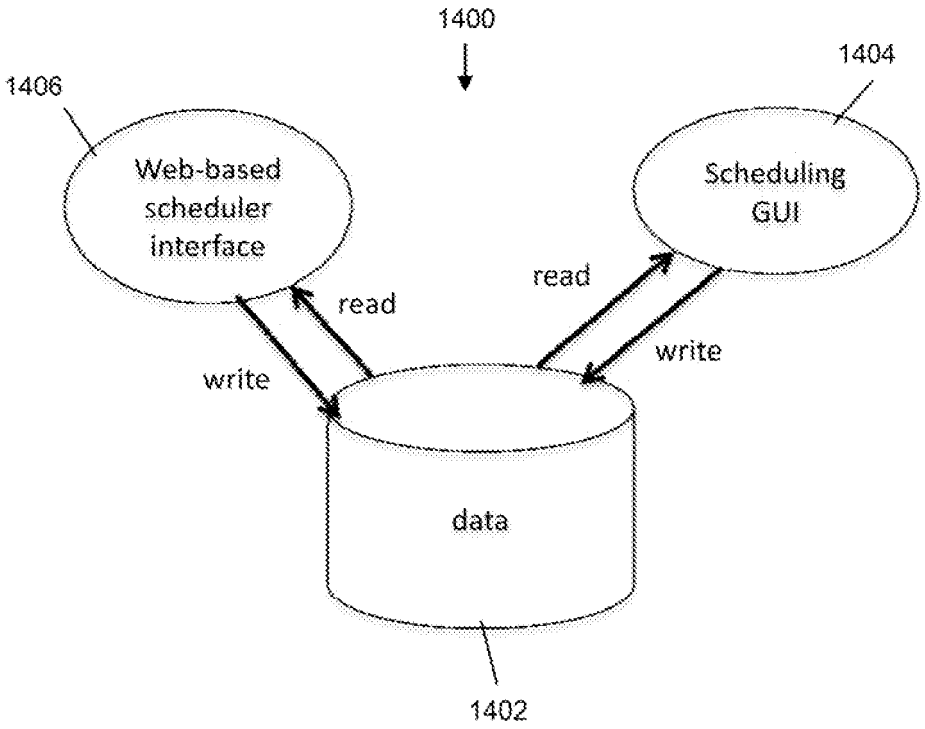
1400
1404
1406
Web-based scheduler interface
Scheduling GUI
read
read
write
write
data
1402

FIG. 14

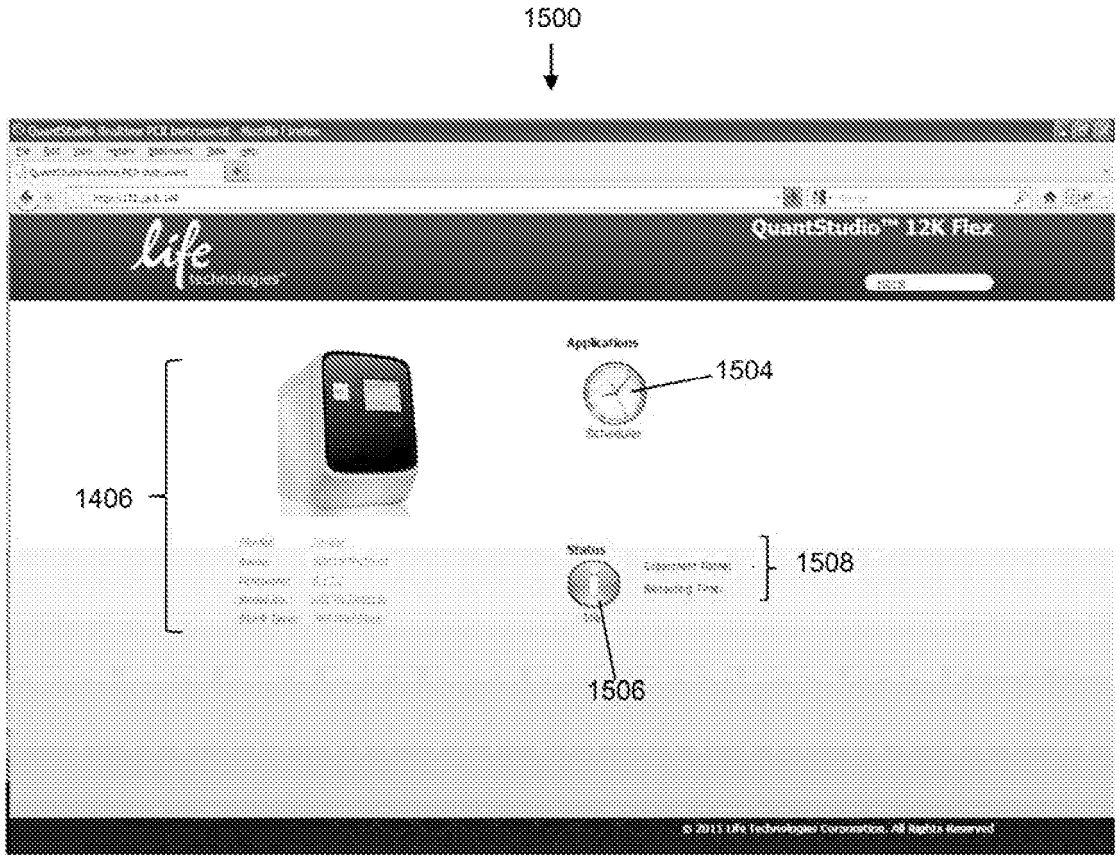

FIG. 15A

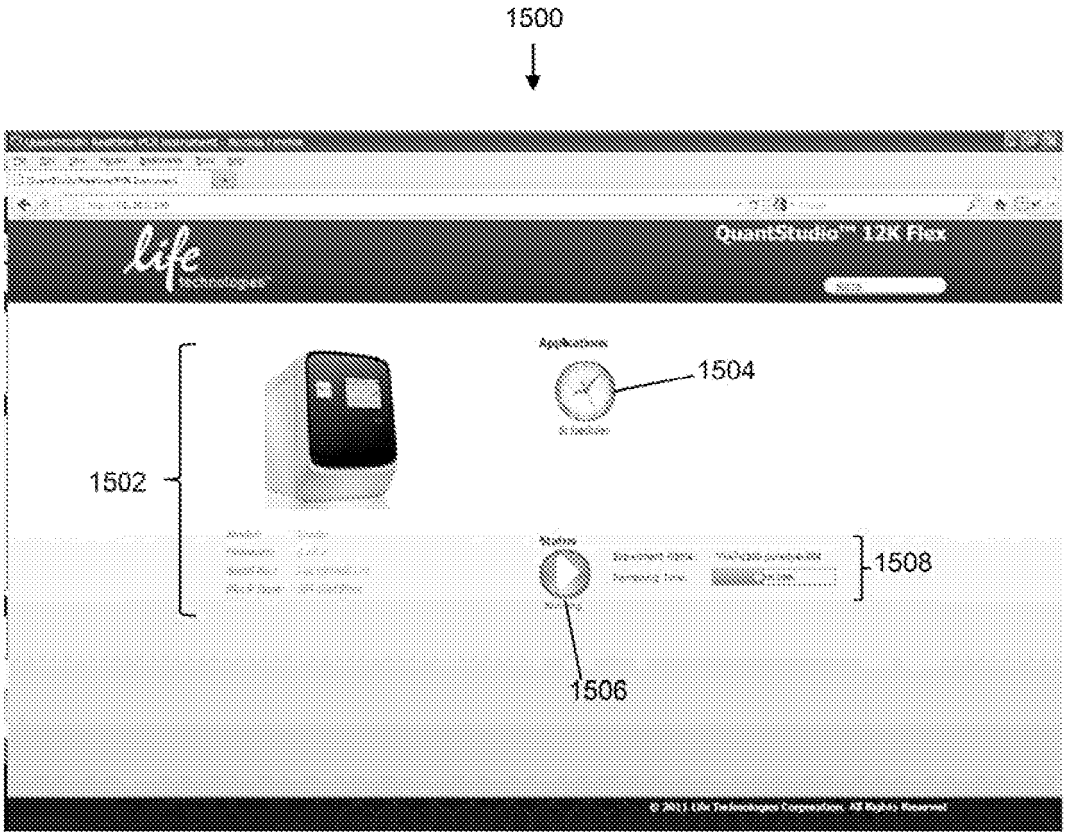

FIG. 15B

1600

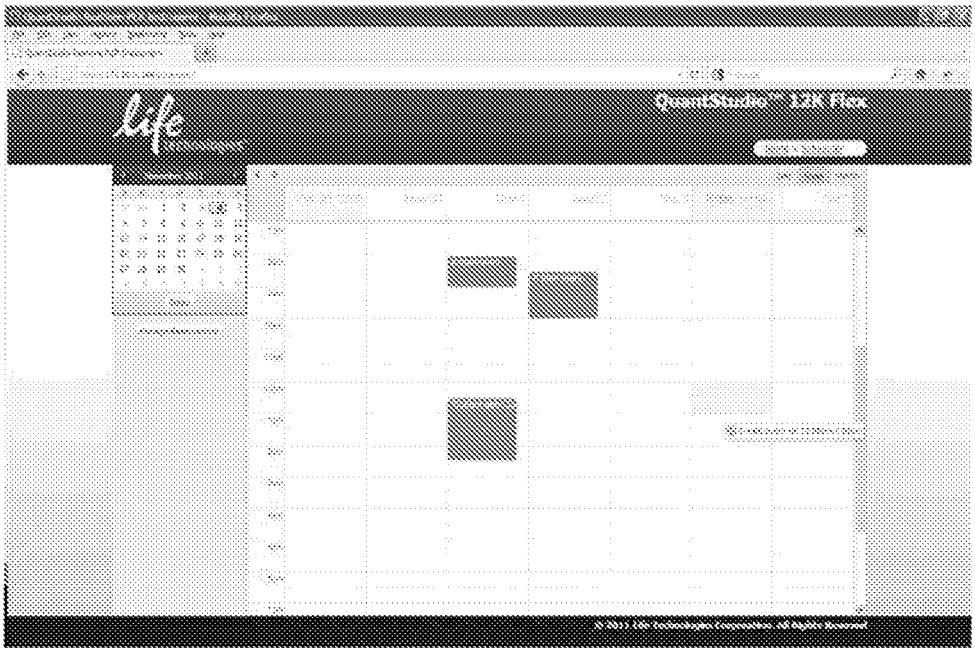

FIG. 16

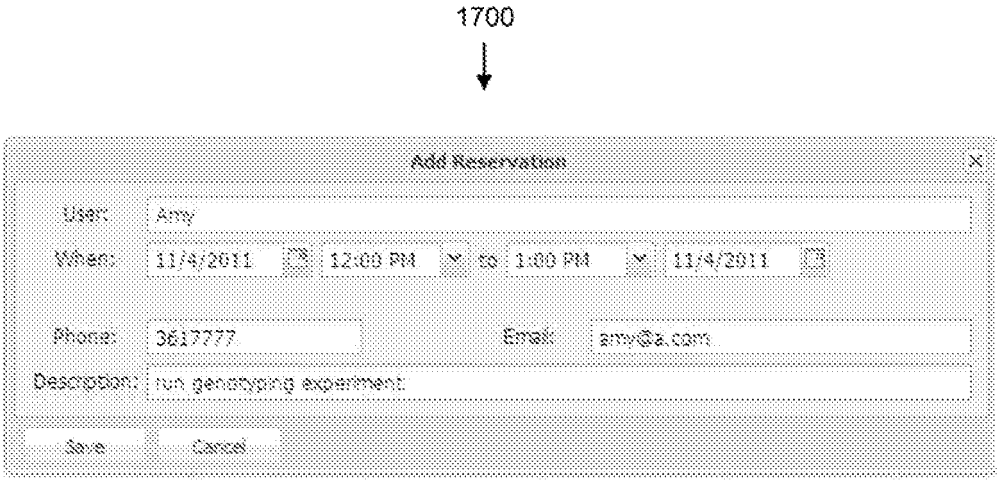
1700
Add Reservation
User:
Amy
When:
11/4/2011
12:00 PM
to
1:00 PM
11/4/2011
Phone:
3617777
Email:
amy@a.com
Description:
run genotyping experiment
Save
Cancel

FIG. 17