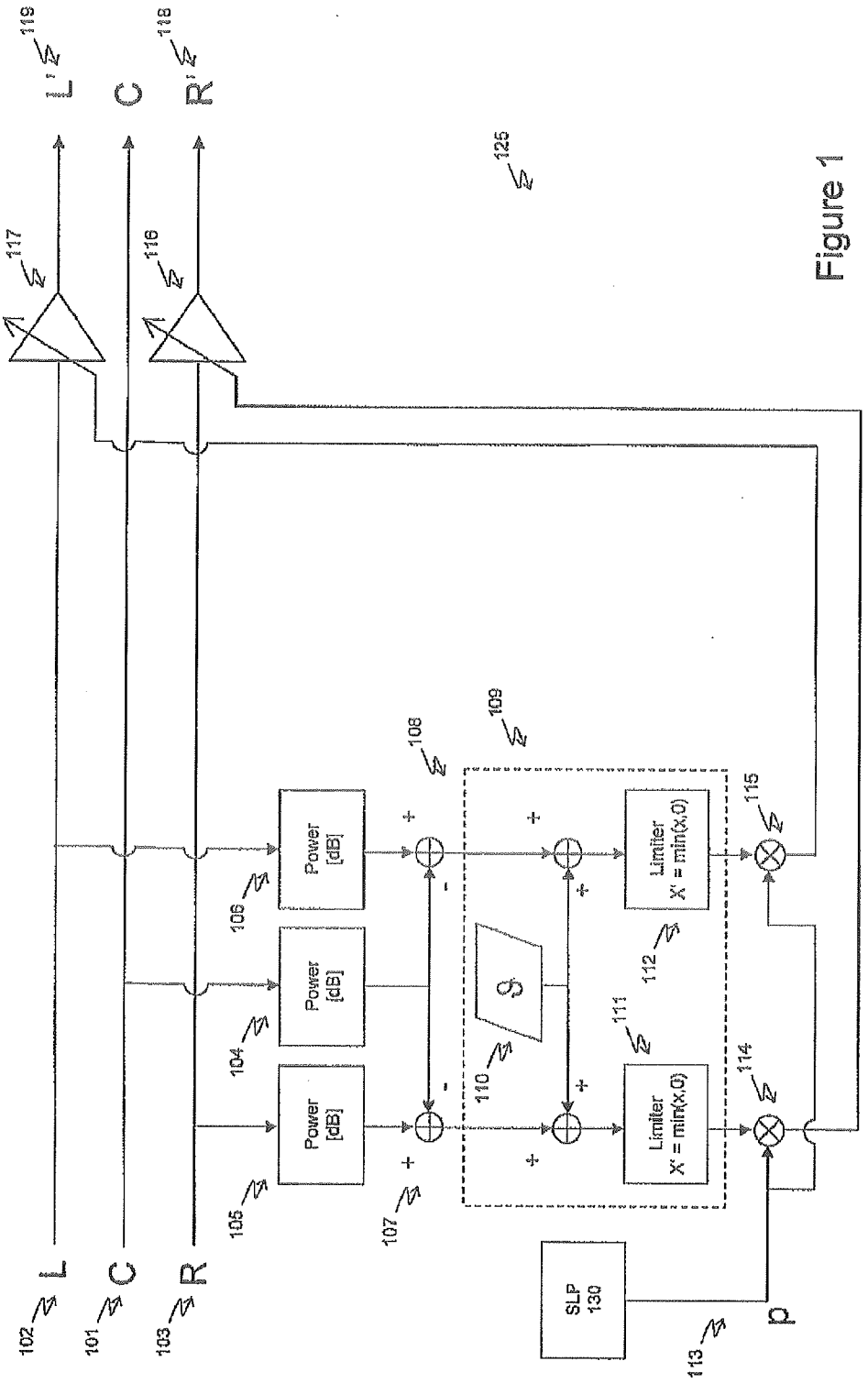
L'
C
R'
119
118
117
116
125
L
C
R
102
101
103
Power [dB]
106
Power [dB]
104
Power [dB]
105
108
109
107
110
111
112
Limiter X' = min(x,0)
Limiter X' = min(x,0)
114
115
SLP 130
113
p

Figure 1

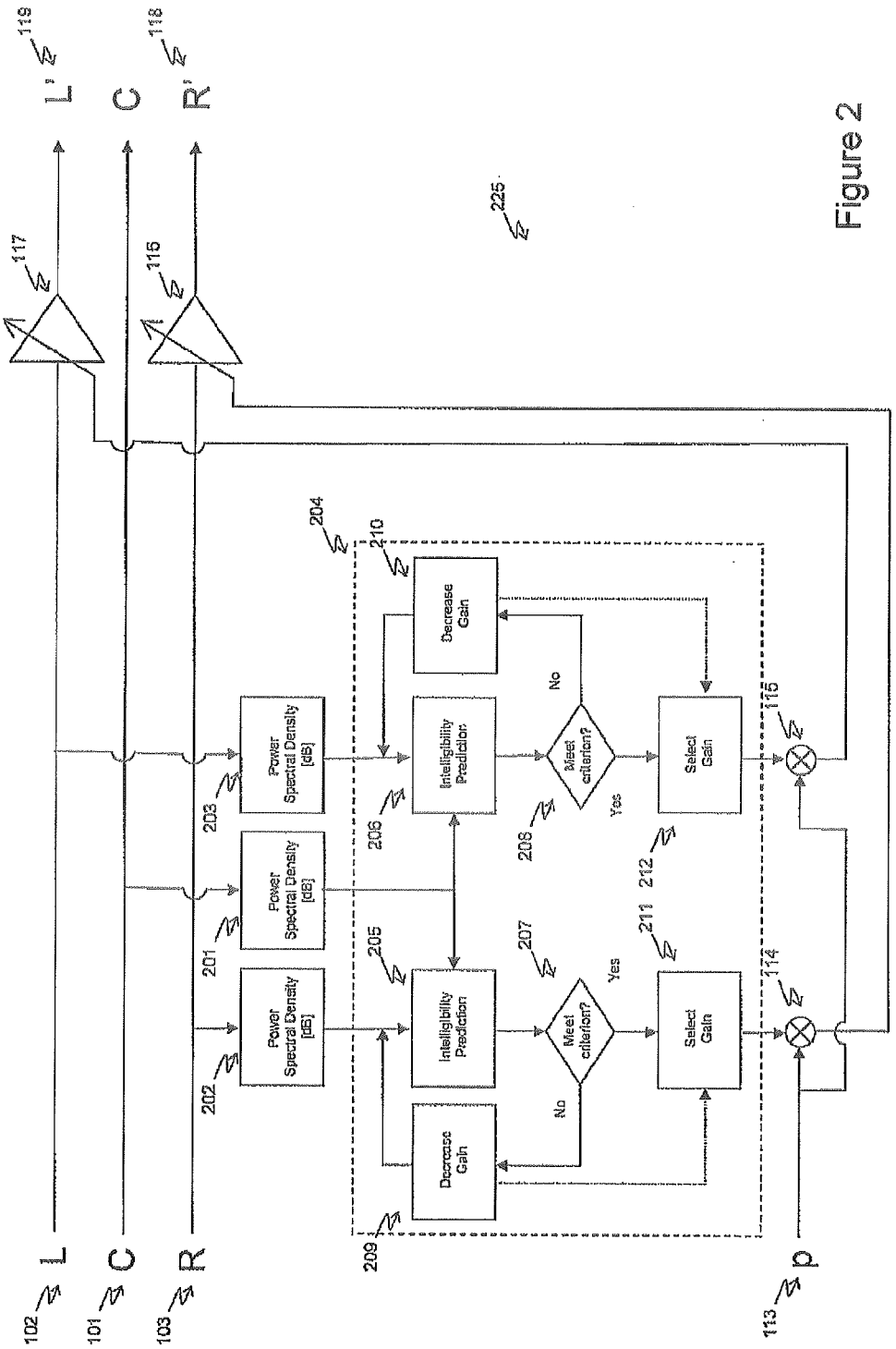
L'
C
R'
119
118
117
116
225
L
C
R
102
101
103
204
210
Decrease Gain
Power Spectral Density [dB]
Intelligibility Prediction
Meet criterion?
No
Yes
Select Gain
203
206
208
212
201
205
207
211
202
209
115
114
p
113

Figure 2

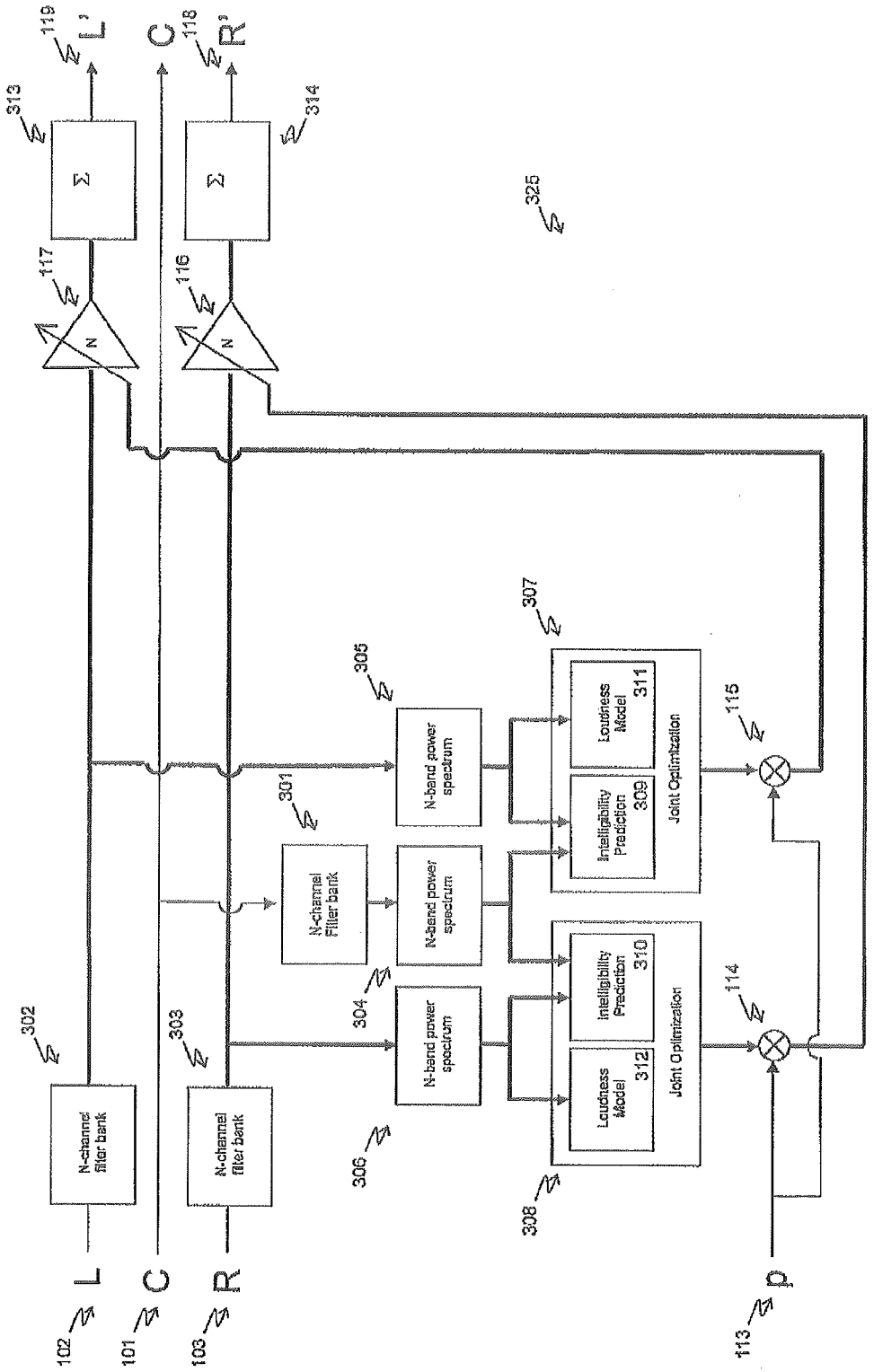
L
C
R
L'
R'
p
N-channel filter bank
N-channel filter bank
N-channel Filter bank
N-band power spectrum
N-band power spectrum
N-band power spectrum
Loudness Model
Intelligibility Prediction
Joint Optimization
Loudness Model
Intelligibility Prediction
Joint Optimization
Σ
Σ
N
N
101
102
103
113
114
115
116
117
118
119
301
302
303
304
305
306
307
308
309
310
311
312
313
314
325

Figure 3

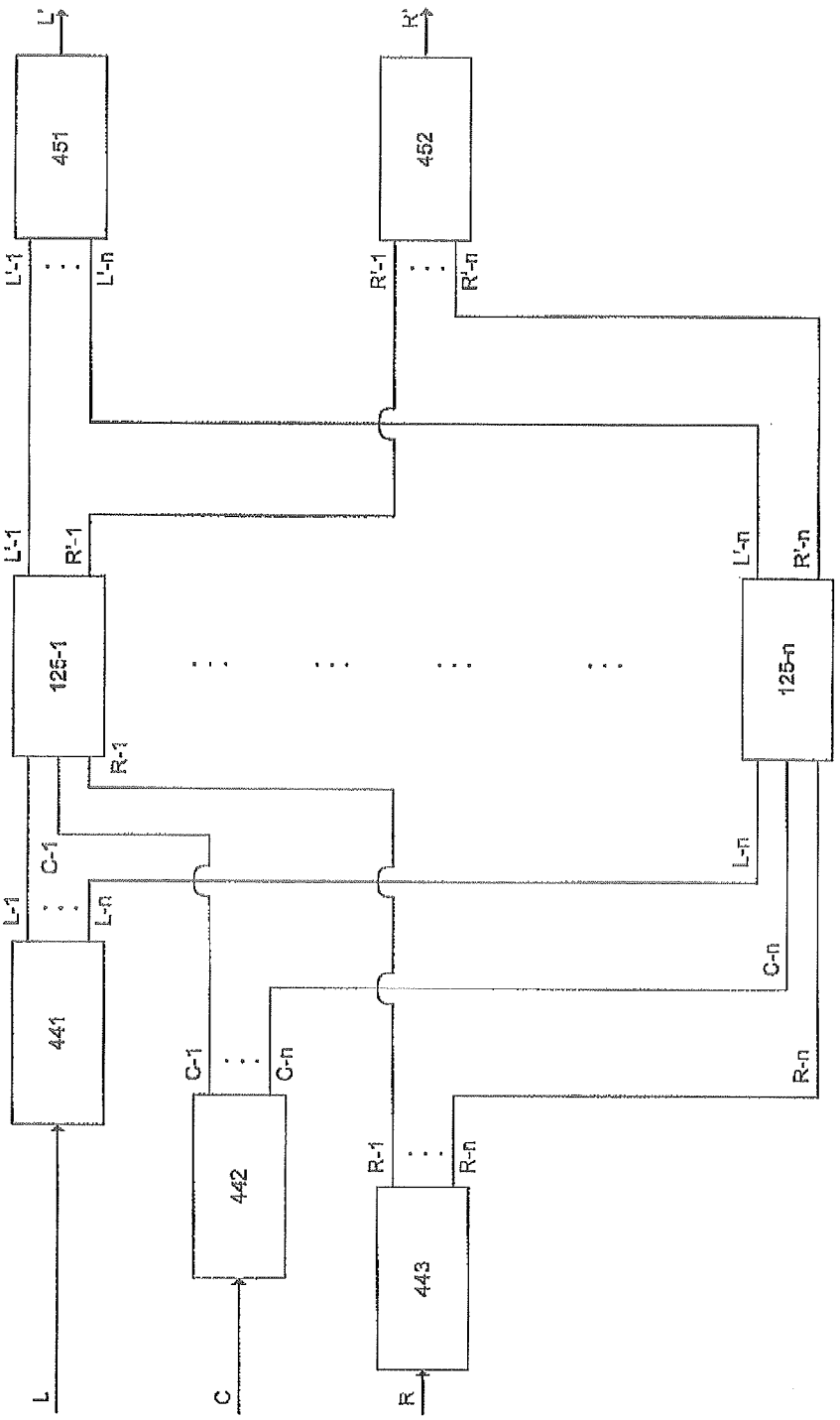

Figure 4A

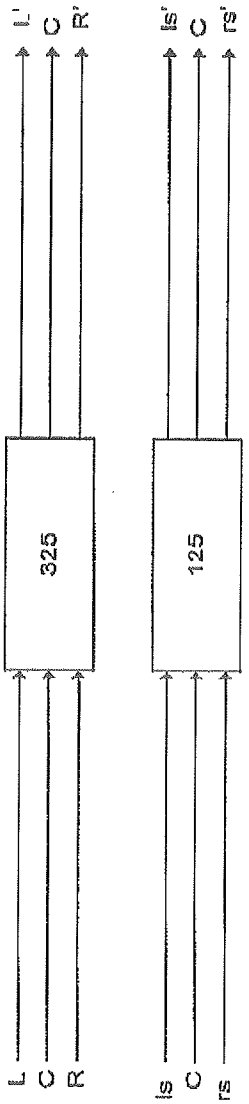

Figure 4B