[Fig 1]

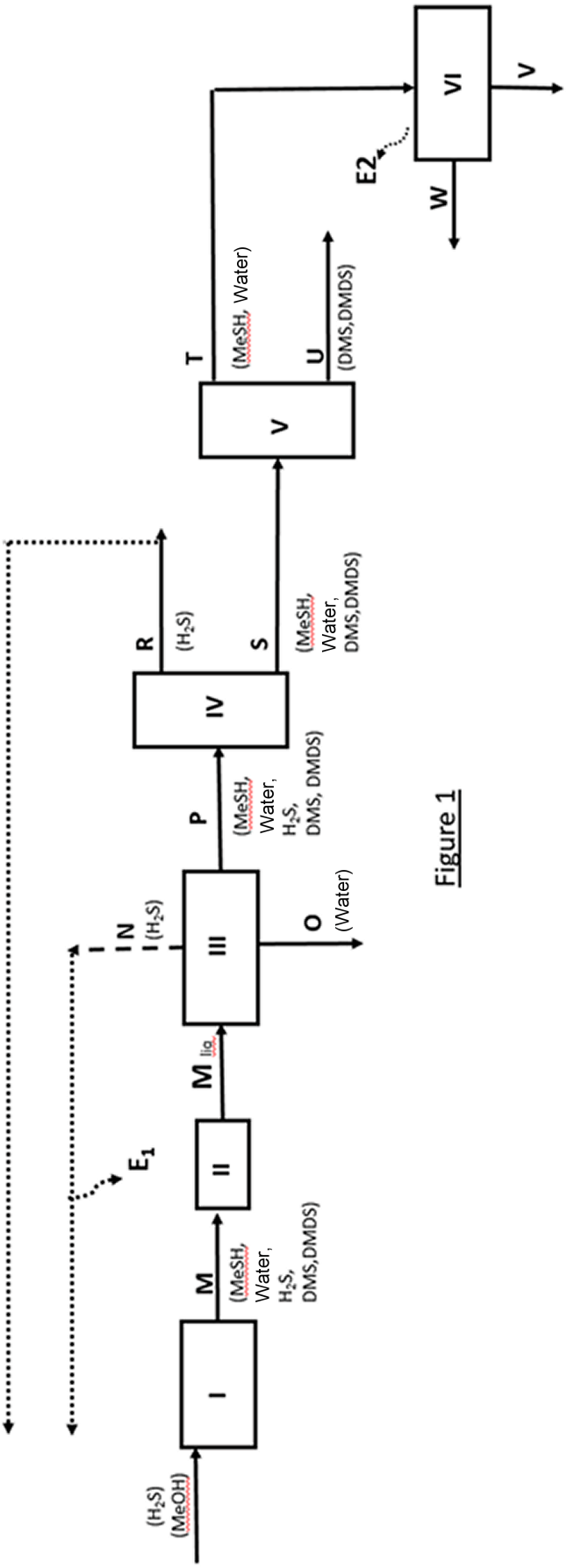

Figure 1

[Fig 2]

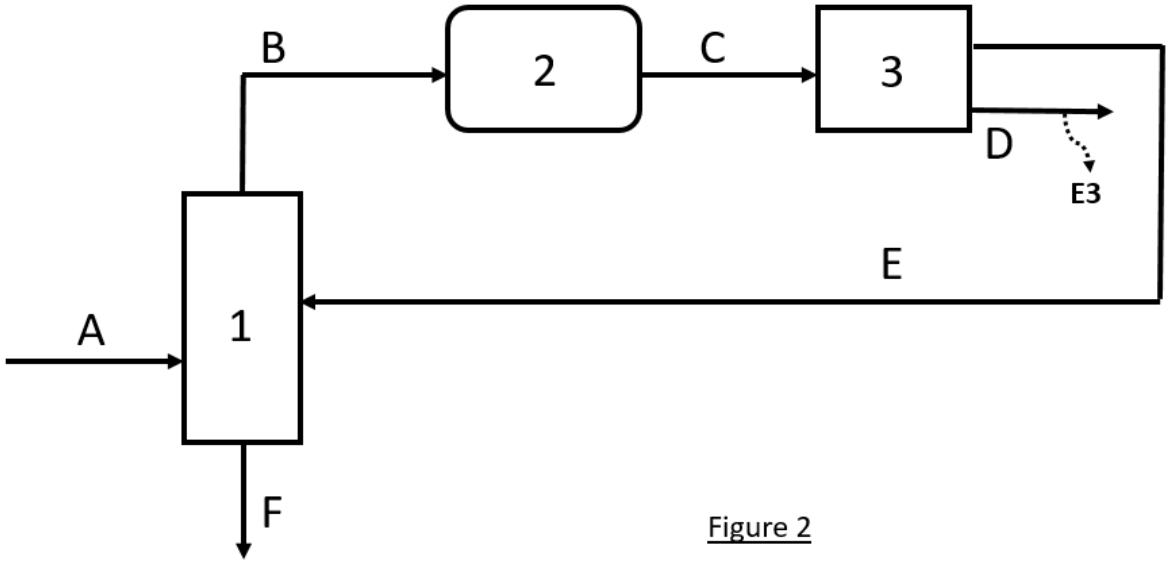

Figure 2