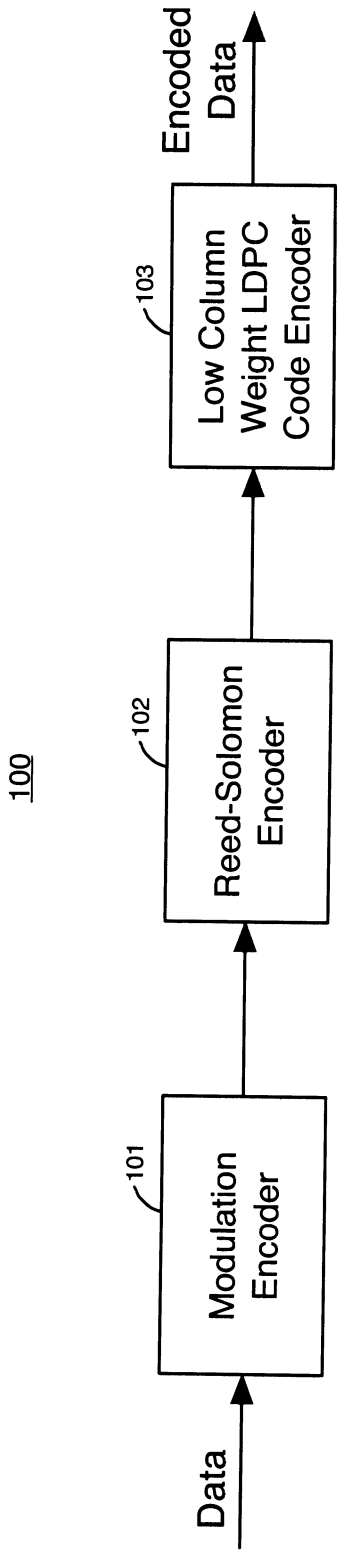
100
Data
101
Modulation Encoder
102
Reed-Solomon Encoder
103
Low Column Weight LDPC Code Encoder
Encoded Data

FIG. 1

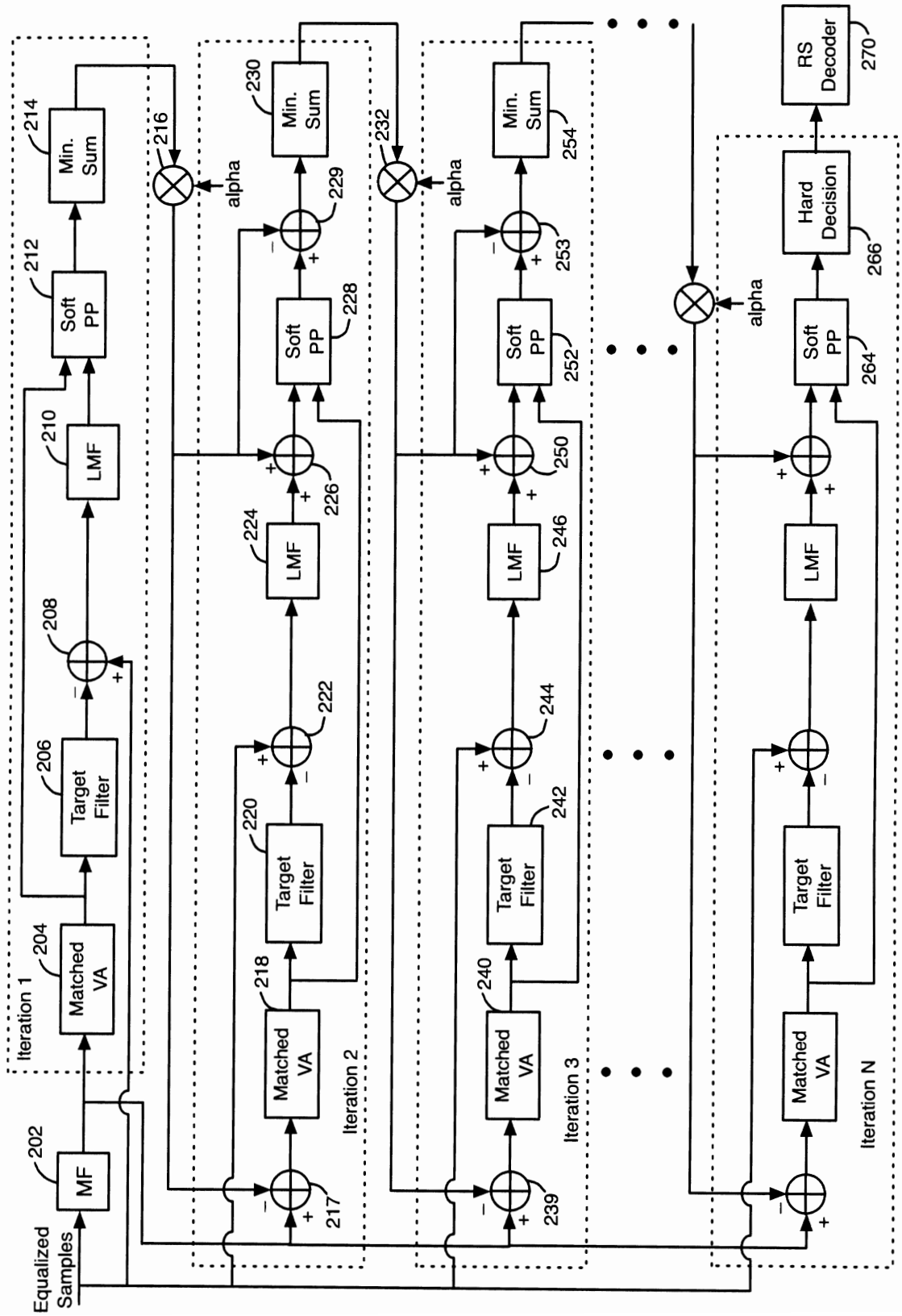
Equalized Samples
MF
202
Matched VA
204
Target Filter
206
LMF
210
Soft PP
212
Min. Sum
214
alpha
216
Iteration 1
Matched VA
218
Target Filter
220
LMF
224
Soft PP
228
Min. Sum
230
alpha
232
Iteration 2
Matched VA
240
Target Filter
242
LMF
246
Soft PP
252
Min. Sum
254
alpha
Iteration 3
Matched VA
Target Filter
LMF
Soft PP
264
Hard Decision
266
RS Decoder
270
Iteration N

FIG. 2

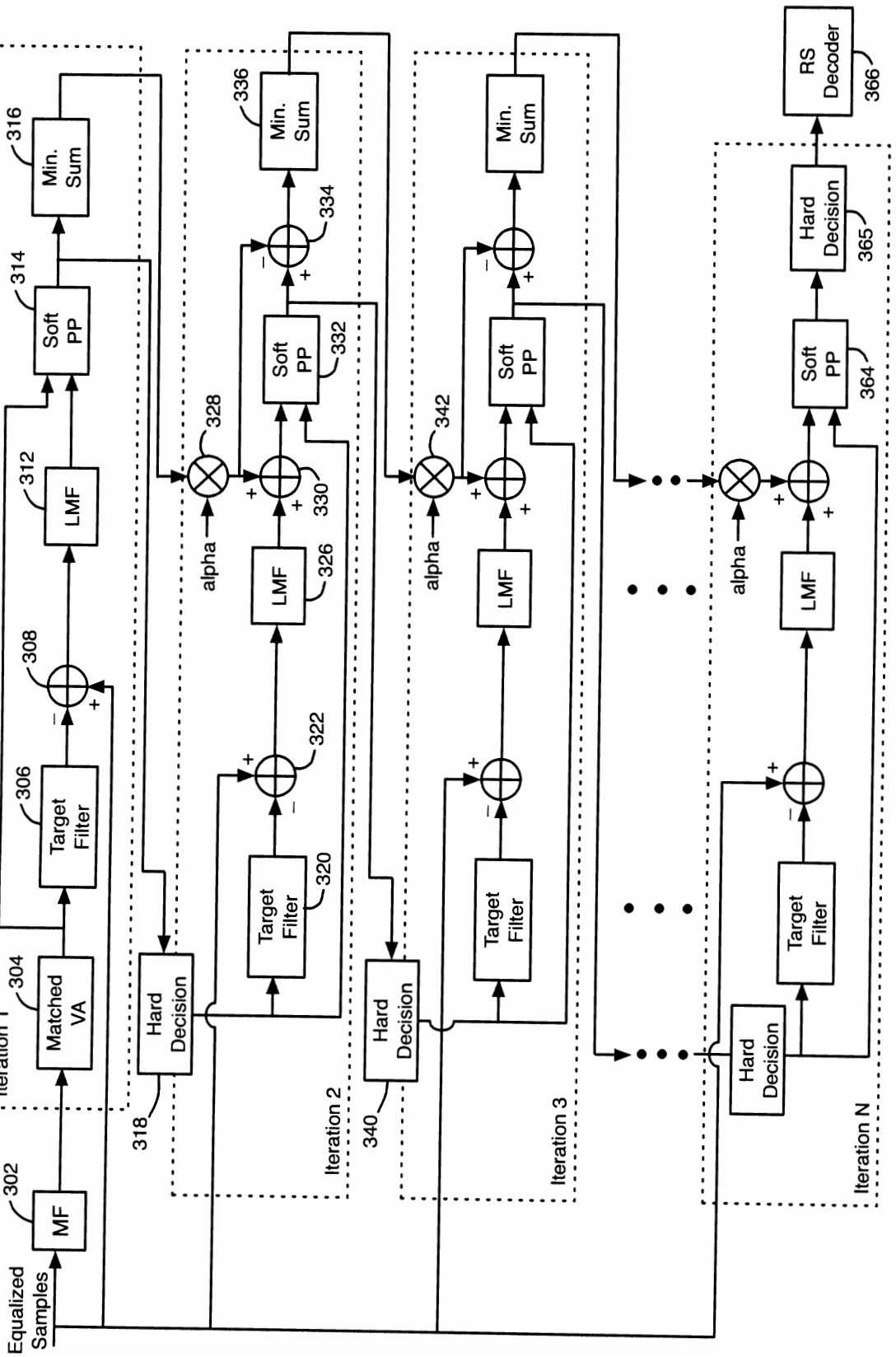
Equalized Samples
MF
302
Matched VA
304
Target Filter
306
LMF
312
Soft PP
314
Min. Sum
316
Hard Decision
318
Iteration 1
alpha
328
LMF
326
Target Filter
320
Soft PP
332
Min. Sum
336
Hard Decision
340
Iteration 2
alpha
342
LMF
Target Filter
Soft PP
Min. Sum
Iteration 3
alpha
LMF
Target Filter
Soft PP
364
Hard Decision
365
RS Decoder
366
Hard Decision
Iteration N

FIG. 3

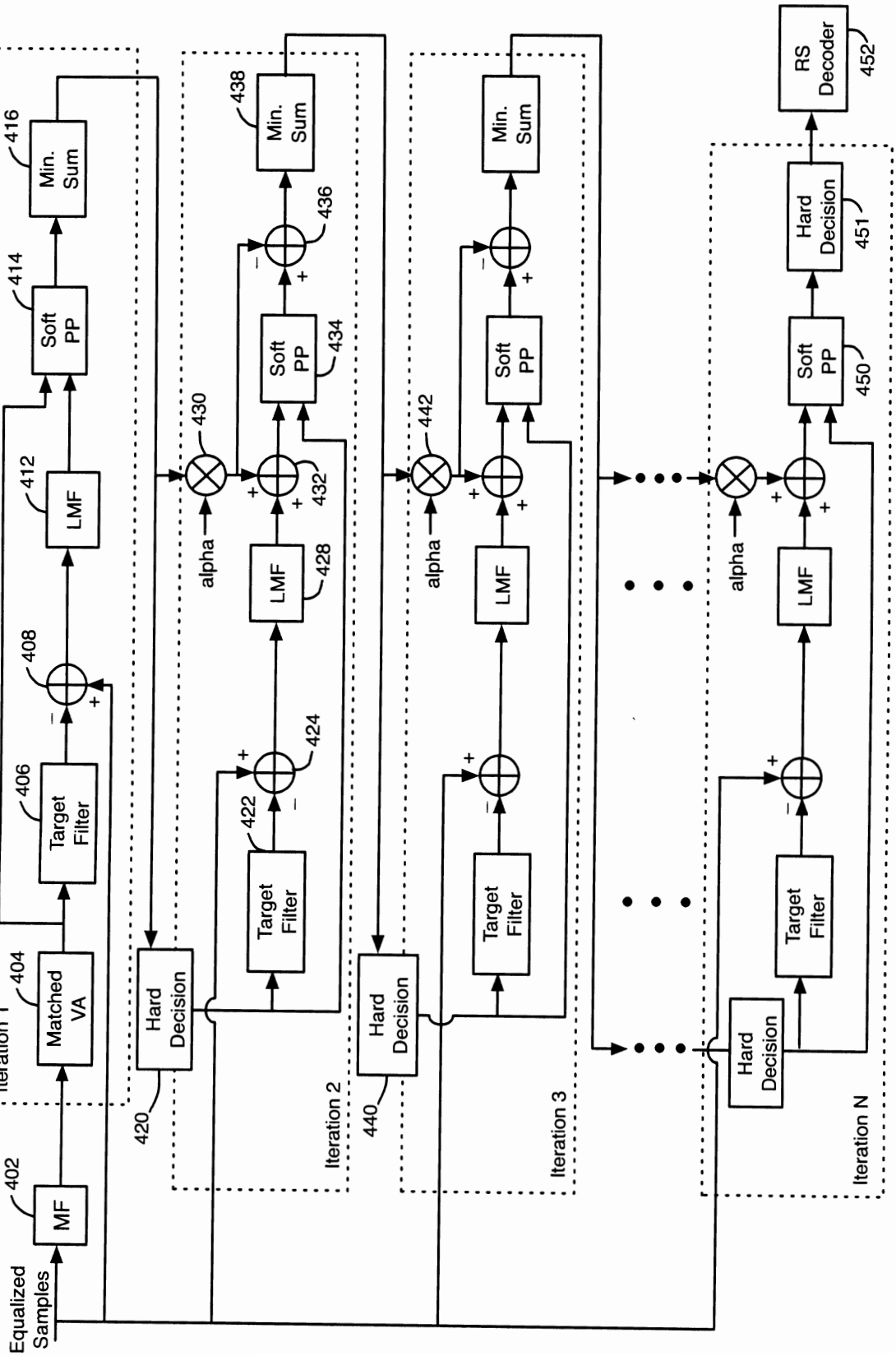
Equalized Samples
MF
402
Matched VA
404
Target Filter
406
LMF
412
Soft PP
414
Min. Sum
416
Iteration 1
Hard Decision
420
alpha
430
LMF
428
Soft PP
434
Min. Sum
438
Iteration 2
Hard Decision
440
alpha
442
LMF
Soft PP
Min. Sum
Iteration 3
Hard Decision
alpha
LMF
Soft PP
450
Hard Decision
451
RS Decoder
452
Iteration N

FIG. 4

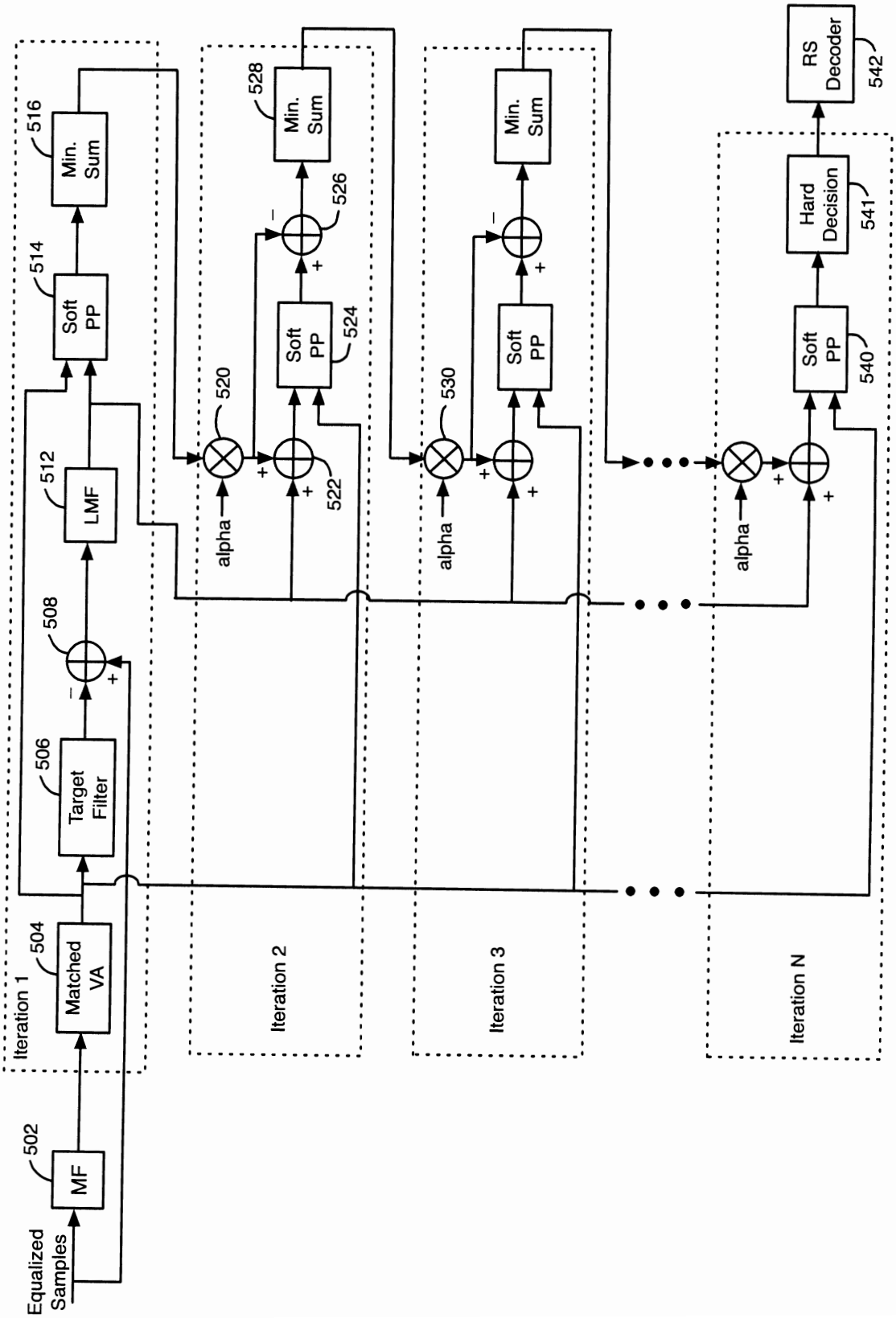
Equalized Samples
502
MF
504
Matched VA
506
Target Filter
508
512
LMF
514
Soft PP
516
Min. Sum
Iteration 1
520
alpha
522
524
Soft PP
526
528
Min. Sum
Iteration 2
530
alpha
Soft PP
Min. Sum
Iteration 3
alpha
Soft PP
540
Hard Decision
541
RS Decoder
542
Iteration N

FIG. 5

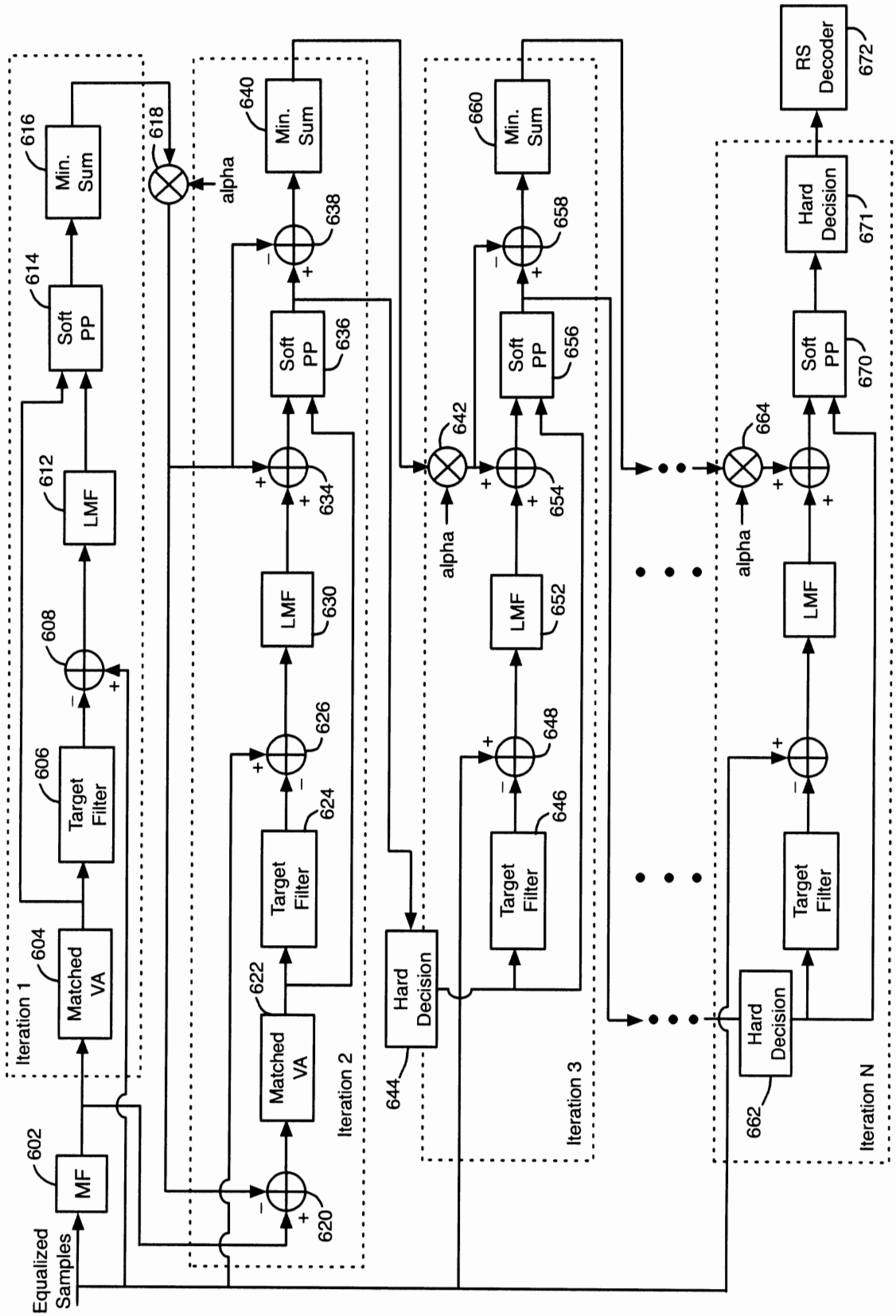
Equalized Samples
MF
602
Matched VA
604
Target Filter
606
LMF
612
Soft PP
614
Min. Sum
616
alpha
618
Iteration 1
Iteration 2
Iteration 3
Iteration N
Hard Decision
644
662
RS Decoder
672
Hard Decision
671
Soft PP
670
LMF
Target Filter
Soft PP
656
LMF
652
Target Filter
646
Soft PP
636
LMF
630
Target Filter
624
Matched VA
622
Min. Sum
640
Min. Sum
660

FIG. 6

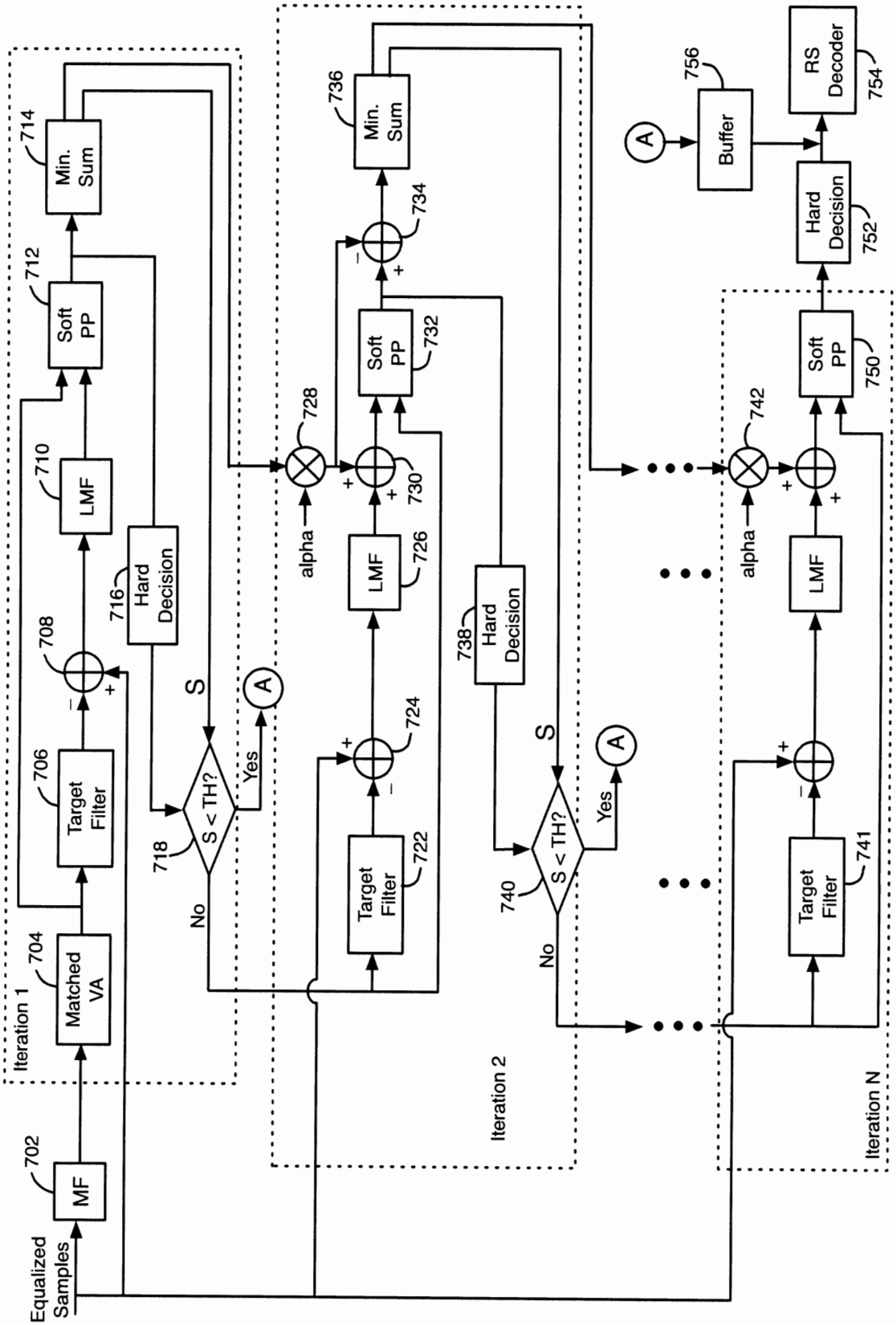
Equalized Samples
MF
702
Matched VA
704
Target Filter
706
LMF
710
Soft PP
712
Min. Sum
714
Hard Decision
716
S < TH?
718
Yes
No
S
A
Iteration 1
alpha
728
LMF
726
Soft PP
732
Min. Sum
736
Target Filter
722
724
730
734
Hard Decision
738
S < TH?
740
Iteration 2
Target Filter
741
LMF
Soft PP
750
Hard Decision
752
RS Decoder
754
Buffer
756
Iteration N

FIG. 7