(12) INTERNATIONAL APPLICATION PUBLISHED UNDER THE PATENT COOPERATION TREATY (PCT)

(19) World Intellectual Property Organization
International Bureau

(43) International Publication Date
16 July 2009 (16.07.2009)

PCT

(10) International Publication Number
WO 2009/089079 A3

(51) **International Patent Classification**:
B60K 17/10 (2006.01) ***B60K 17/04*** (2006.01)
F16H 47/02 (2006.01)

(21) **International Application Number**:
PCT/US2009/030001

(22) **International Filing Date**:
2 January 2009 (02.01.2009)

(25) **Filing Language**: English

(26) **Publication Language**: English

(30) **Priority Data**:
61/018,540 2 January 2008 (02.01.2008) US

(71) **Applicant** *(for all designated States except US)*: **PARKER-HANNIFIN CORPORATION** [US/US]; 6035 Parkland Boulevard, Cleveland, OH 44124-4141 (US).

(72) **Inventors; and**

(75) **Inventors/Applicants** *(for US only)*: **LOEFFLER, John, M.** [US/US]; 3930 Mary Jane Lane, Olive Branch, MS 38654 (US). **BLALOCK, James, A.** [US/US]; 4155 Summers Place Drive, Olive Branch, MS 38654 (US).

(74) **Agent**: **MACMILLAN, Richard, S.**; MacMillan, Sobanski & Todd, LLC, One Maritime Plaza; 5th Floor, 720 Water Street, Toledo, OH 43604 (US).

(81) **Designated States** *(unless otherwise indicated, for every kind of national protection available)*: AE, AG, AL, AM, AO, AT, AU, AZ, BA, BB, BG, BH, BR, BW, BY, BZ, CA, CH, CN, CO, CR, CU, CZ, DE, DK, DM, DO, DZ, EC, EE, EG, ES, FI, GB, GD, GE, GH, GM, GT, HN, HR, HU, ID, IL, IN, IS, JP, KE, KG, KM, KN, KP, KR, KZ, LA, LC, LK, LR, LS, LT, LU, LY, MA, MD, ME, MG, MK, MN, MW, MX, MY, MZ, NA, NG, NI, NO, NZ, OM, PG, PH, PL, PT, RO, RS, RU, SC, SD, SE, SG, SK, SL, SM, ST, SV, SY, TJ, TM, TN, TR, TT, TZ, UA, UG, US, UZ, VC, VN, ZA, ZM, ZW.

(84) **Designated States** *(unless otherwise indicated, for every kind of regional protection available)*: ARIPO (BW, GH, GM, KE, LS, MW, MZ, NA, SD, SL, SZ, TZ, UG, ZM, ZW), Eurasian (AM, AZ, BY, KG, KZ, MD, RU, TJ, TM), European (AT, BE, BG, CH, CY, CZ, DE, DK, EE, ES, FI, FR, GB, GR, HR, HU, IE, IS, IT, LT, LU, LV, MC, MK, MT, NL, NO, PL, PT, RO, SE, SI, SK, TR), OAPI (BF, BJ, CF, CG, CI, CM, GA, GN, GQ, GW, ML, MR, NE, SN, TD, TG).

Published:

— *with international search report (Art. 21(3))*

— *before the expiration of the time limit for amending the claims and to be republished in the event of receipt of amendments (Rule 48.2(h))*

(88) **Date of publication of the international search report**:
15 October 2009

(54) **Title**: HYDRAULIC POWER OUTPUT UNIT AND HYDRAULIC HYBRID DRIVE SYSTEM INCLUDING SAME

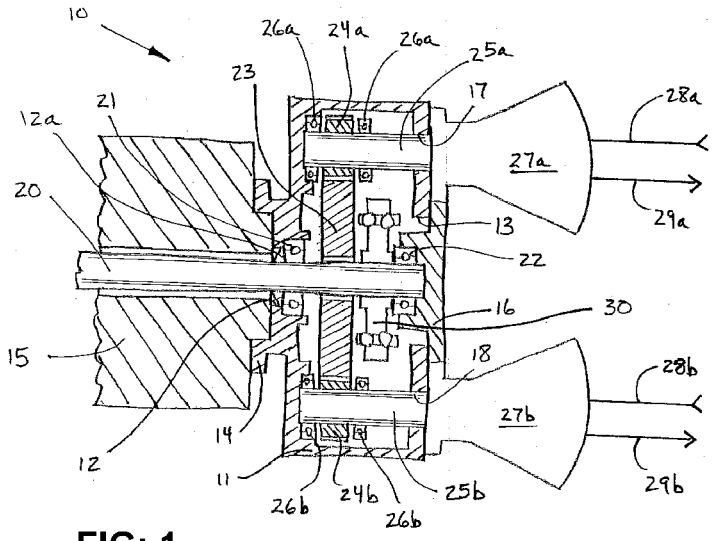

FIG: 1

(57) **Abstract**: A hydraulic power output unit can be used in a hydraulic hybrid drive system for propelling a vehicle. The hydraulic power output unit includes a housing having an input shaft that extends within the housing and is adapted to be rotatably driven by a source of rotational power. A hydraulic pump is rotatably driven by the input driveshaft to pump hydraulic fluid. A vibration damper is provided within the housing for dampening vibrations in the input shaft.

WO 2009/089079 A3