(12) INTERNATIONAL APPLICATION PUBLISHED UNDER THE PATENT COOPERATION TREATY (PCT)

(19) World Intellectual Property Organization
International Bureau

(43) International Publication Date
25 August 2005 (25.08.2005)

PCT

(10) International Publication Number
WO 2005/078921 A3

(51) International Patent Classification[7]: H03G 1/00, H03D 7/14

(21) International Application Number: PCT/US2005/002665

(22) International Filing Date: 2 February 2005 (02.02.2005)

(25) Filing Language: English

(26) Publication Language: English

(30) Priority Data:
10/779,100 11 February 2004 (11.02.2004) US

(71) Applicant *(for all designated States except US)*: **SILICON LABORATORIES INC.** [US/US]; 4635 Boston Lane, Austin, Texas 78735 (US).

(72) Inventor; and
(75) Inventor/Applicant *(for US only)*: **KRONE, Andrew, W.** [US/US]; 7000 William Canon Drive, Building 1, Suite 200, Austin, Texas 78735 (US).

(74) Agents: **POLANSKY, Paul, J.** et al.; 5000 Plaza on the Lake, Suite 265, Austin, Texas 78746 (US).

(81) Designated States *(unless otherwise indicated, for every kind of national protection available)*: AE, AG, AL, AM, AT, AU, AZ, BA, BB, BG, BR, BW, BY, BZ, CA, CH, CN, CO, CR, CU, CZ, DE, DK, DM, DZ, EC, EE, EG, ES, FI, GB, GD, GE, GH, GM, HR, HU, ID, IL, IN, IS, JP, KE, KG, KP, KR, KZ, LC, LK, LR, LS, LT, LU, LV, MA, MD, MG, MK, MN, MW, MX, MZ, NA, NI, NO, NZ, OM, PG, PH, PL, PT, RO, RU, SC, SD, SE, SG, SK, SL, SM, SY, TJ, TM, TN, TR, TT, TZ, UA, UG, US, UZ, VC, VN, YU, ZA, ZM, ZW.

(84) Designated States *(unless otherwise indicated, for every kind of regional protection available)*: ARIPO (BW, GH, GM, KE, LS, MW, MZ, NA, SD, SL, SZ, TZ, UG, ZM, ZW), Eurasian (AM, AZ, BY, KG, KZ, MD, RU, TJ, TM), European (AT, BE, BG, CH, CY, CZ, DE, DK, EE, ES, FI, FR, GB, GR, HU, IE, IS, IT, LT, LU, MC, NL, PL, PT, RO, SE, SI, SK, TR), OAPI (BF, BJ, CF, CG, CI, CM, GA, GN, GQ, GW, ML, MR, NE, SN, TD, TG).

Published:
— *with international search report*

(88) Date of publication of the international search report: 27 April 2006

For two-letter codes and other abbreviations, refer to the "Guidance Notes on Codes and Abbreviations" appearing at the beginning of each regular issue of the PCT Gazette.

(54) Title: RADIO FREQUENCY LOW NOISE AMPLIFIER WITH AUTOMATIC GAIN CONTROL

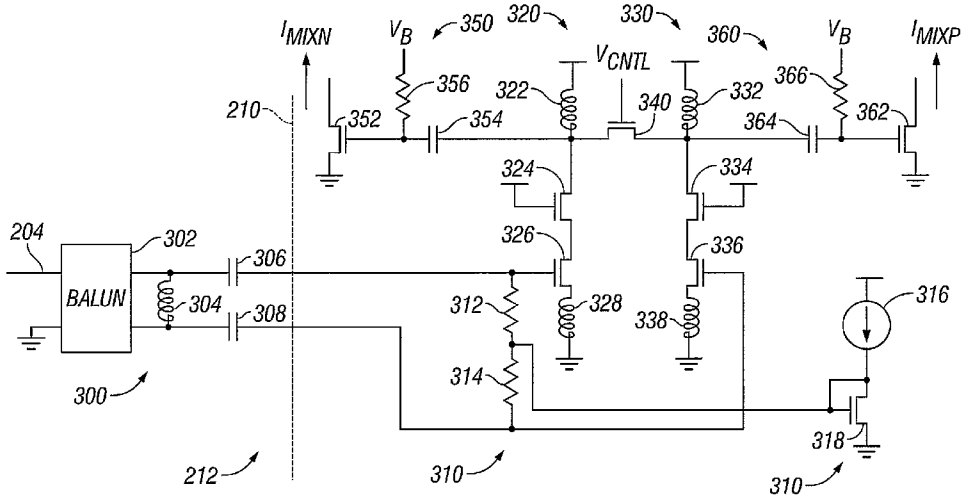

(57) Abstract: A low noise amplifier (500) includes a first transconductance device (326) having a control electrode for receiving a first input signal, and a first current electrode; a first load device (322) having a first terminal coupled to a first power supply voltage terminal and a second terminal coupled to the first current electrode of the first transconductance device (326) and forming a first output voltage signal; a second transconductance device (336) having a control electrode for receiving a second input signal, and a second current electrode; a second load device (332) having a first terminal coupled to the first power supply voltage terminal and a second terminal coupled to the first current electrode of the second transconductance device (336) and forming a second output voltage signal; and an attenuation device (340) coupled between the first current electrodes of the first (326) and second (336) transconductance devices and having a control input terminal for receiving a control voltage thereon.

WO 2005/078921 A3