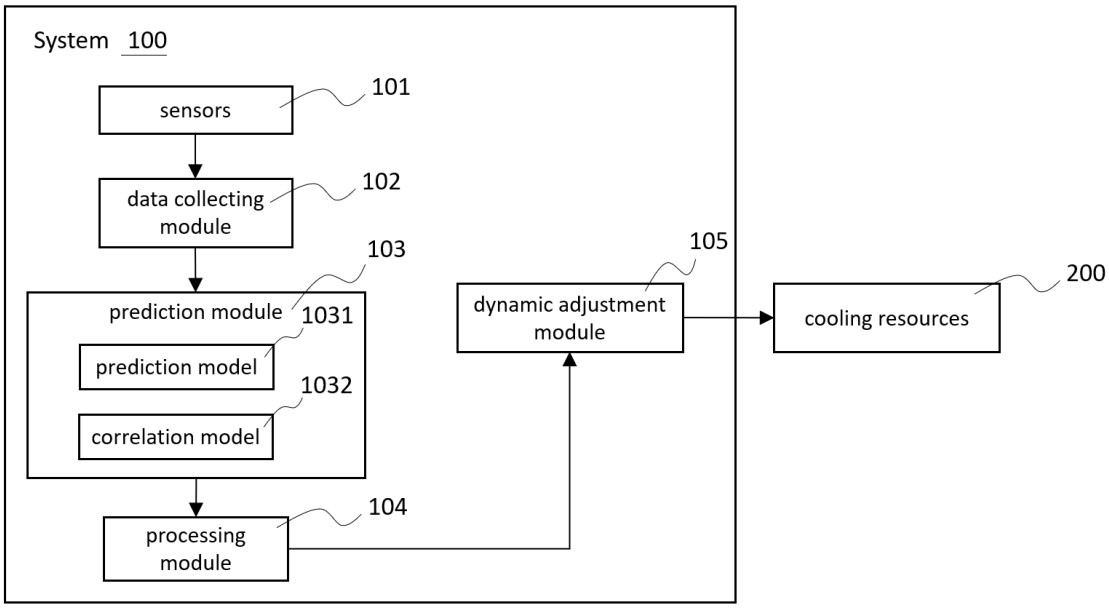
System 100
sensors
101
data collecting module
102
prediction module
103
prediction model
1031
correlation model
1032
processing module
104
dynamic adjustment module
105
cooling resources
200

Fig. 1

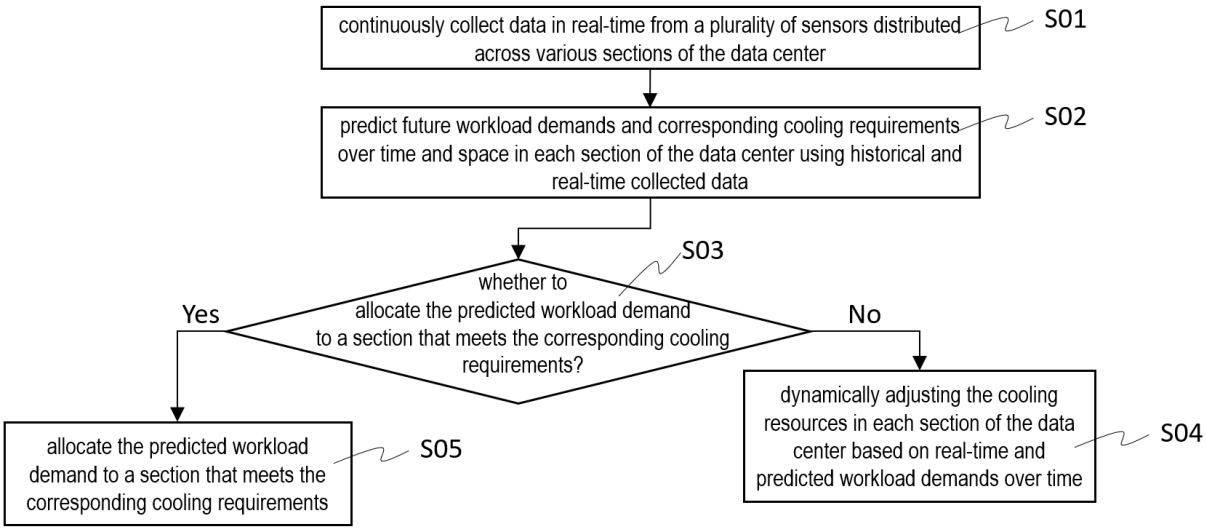
continuously collect data in real-time from a plurality of sensors distributed across various sections of the data center
S01
predict future workload demands and corresponding cooling requirements over time and space in each section of the data center using historical and real-time collected data
S02
S03
whether to allocate the predicted workload demand to a section that meets the corresponding cooling requirements?
Yes
No
allocate the predicted workload demand to a section that meets the corresponding cooling requirements
S05
dynamically adjusting the cooling resources in each section of the data center based on real-time and predicted workload demands over time
S04

Fig. 2

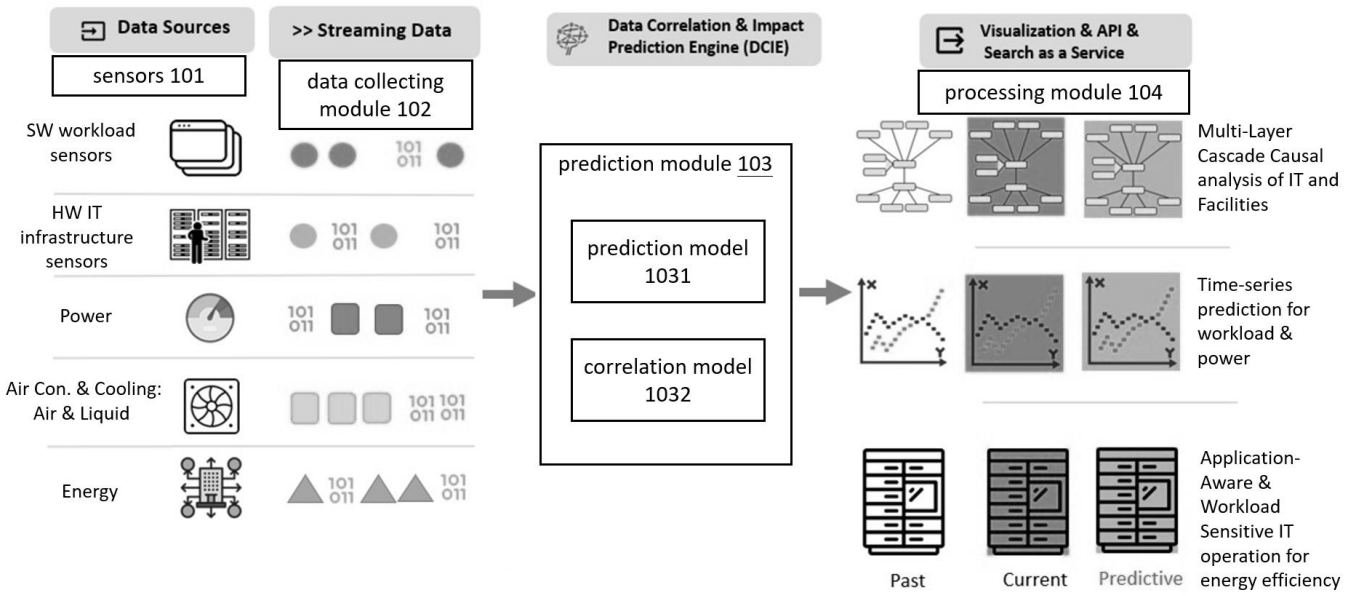
Data Sources
>> Streaming Data
sensors 101
data collecting module 102
SW workload sensors
HW IT infrastructure sensors
Power
Air Con. & Cooling: Air & Liquid
Energy
Data Correlation & Impact Prediction Engine (DCIE)
prediction module 103
prediction model 1031
correlation model 1032
Visualization & API & Search as a Service
processing module 104
Multi-Layer Cascade Causal analysis of IT and Facilities
Time-series prediction for workload & power
Application-Aware & Workload Sensitive IT operation for energy efficiency
Past
Current
Predictive

Fig. 3

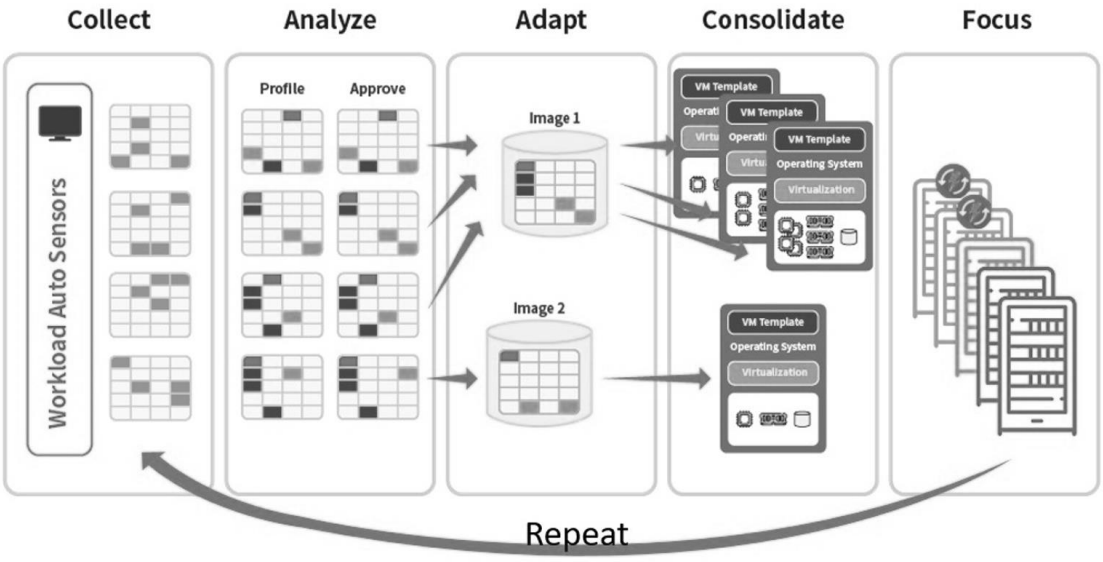
Collect
Analyze
Adapt
Consolidate
Focus
Workload Auto Sensors
Profile
Approve
Image 1
Image 2
VM Template
Operating System
Virtualization
Repeat

Fig. 4