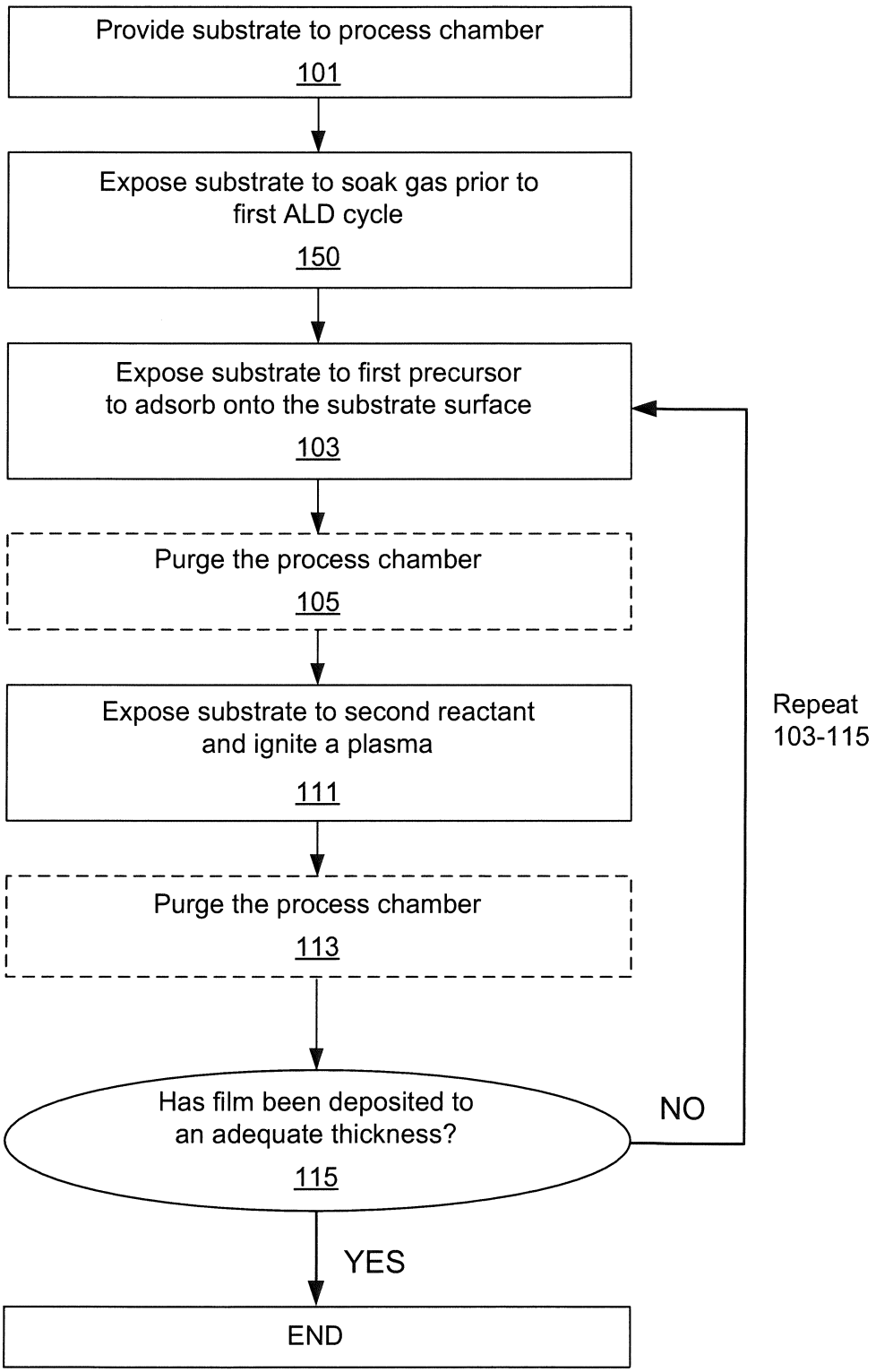
Provide substrate to process chamber
101
Expose substrate to soak gas prior to first ALD cycle
150
Expose substrate to first precursor to adsorb onto the substrate surface
103
Purge the process chamber
105
Expose substrate to second reactant and ignite a plasma
111
Purge the process chamber
113
Has film been deposited to an adequate thickness?
115
NO
Repeat 103-115
YES
END

FIG. 1

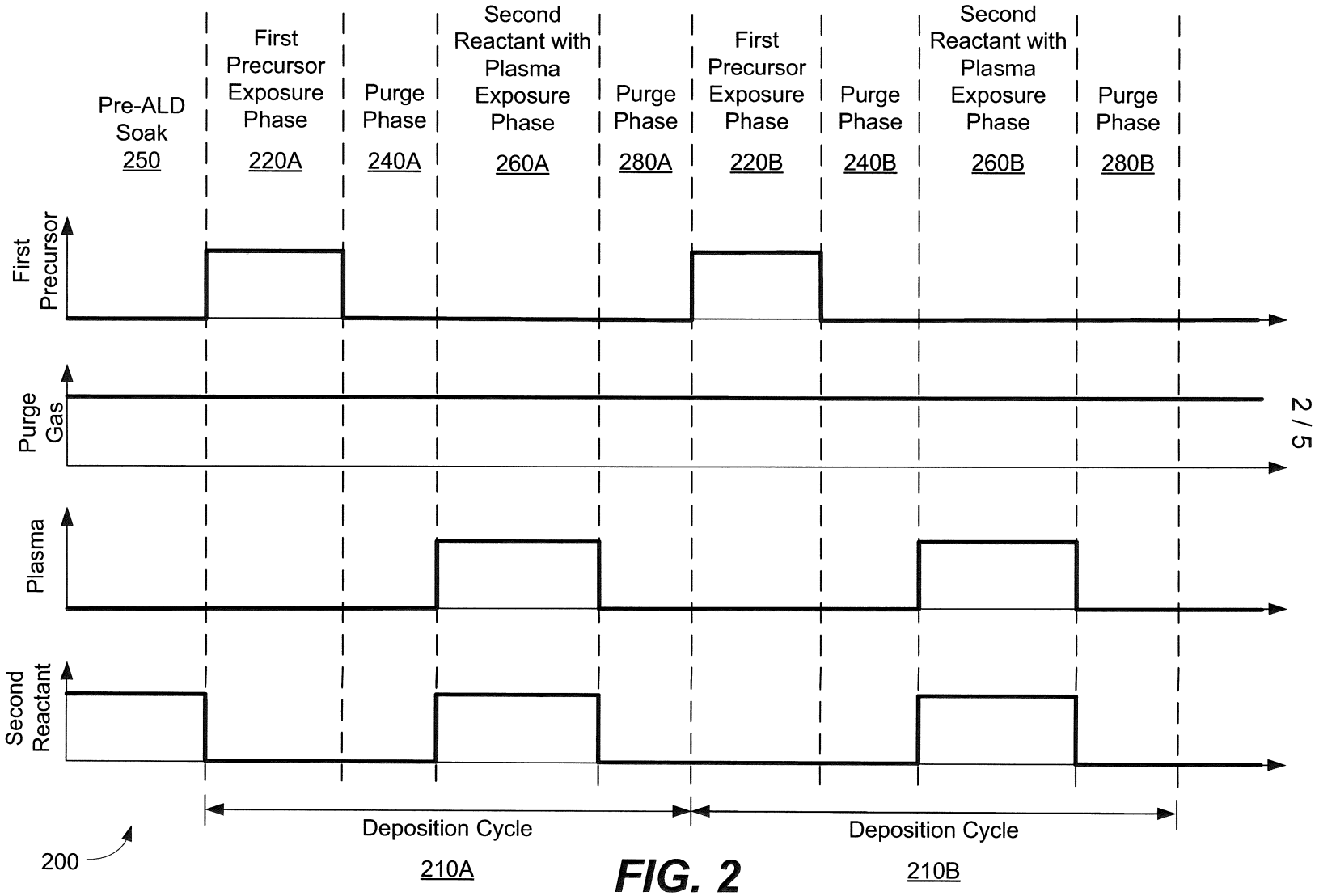
Pre-ALD Soak 250
First Precursor Exposure Phase 220A
Purge Phase 240A
Second Reactant with Plasma Exposure Phase 260A
Purge Phase 280A
First Precursor Exposure Phase 220B
Purge Phase 240B
Second Reactant with Plasma Exposure Phase 260B
Purge Phase 280B
First Precursor
Purge Gas
Plasma
Second Reactant
Deposition Cycle 210A
Deposition Cycle 210B
200

FIG. 2

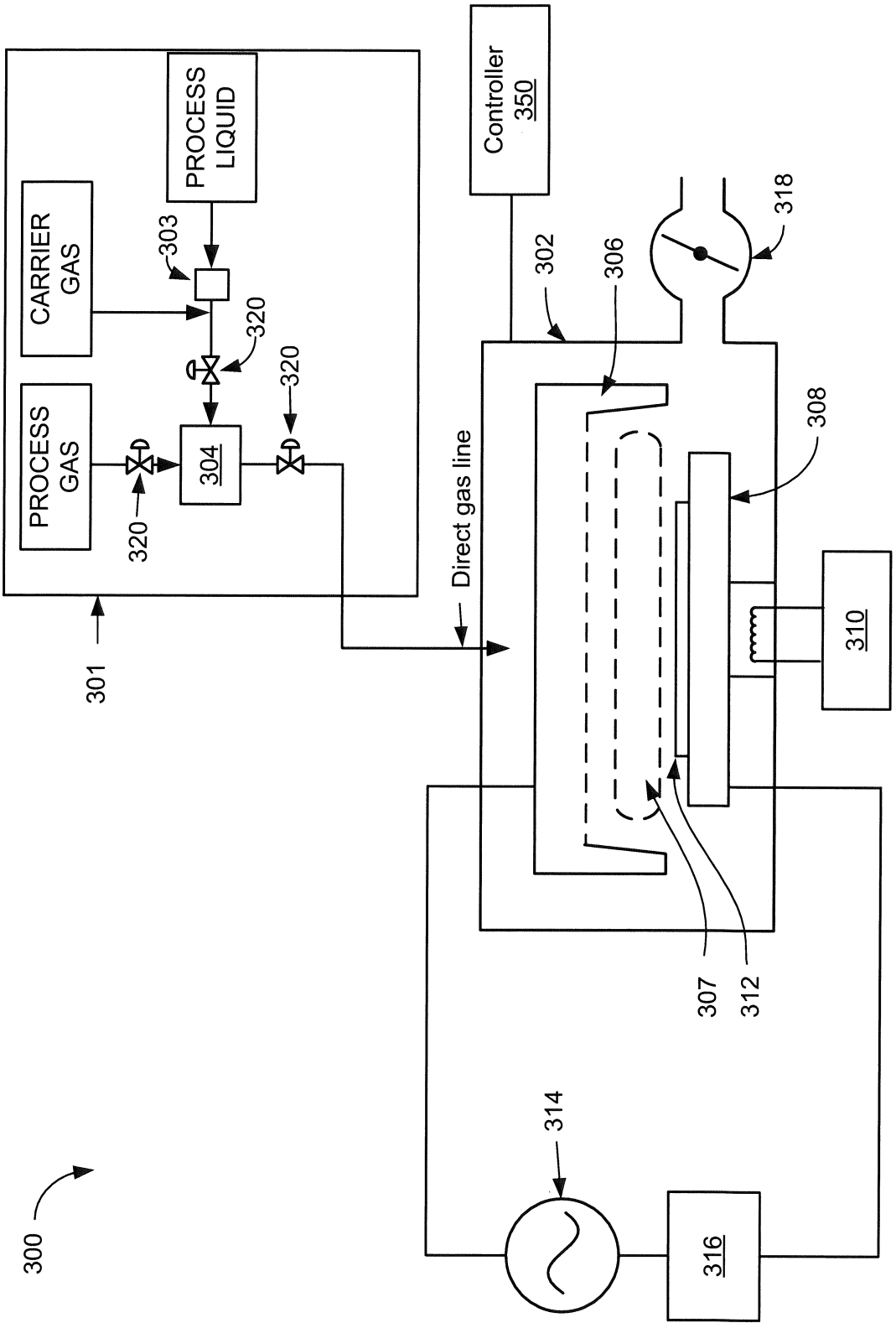
300
301
PROCESS GAS
CARRIER GAS
PROCESS LIQUID
303
320
320
320
304
Direct gas line
Controller 350
302
306
318
308
310
307
312
314
316

FIG. 3

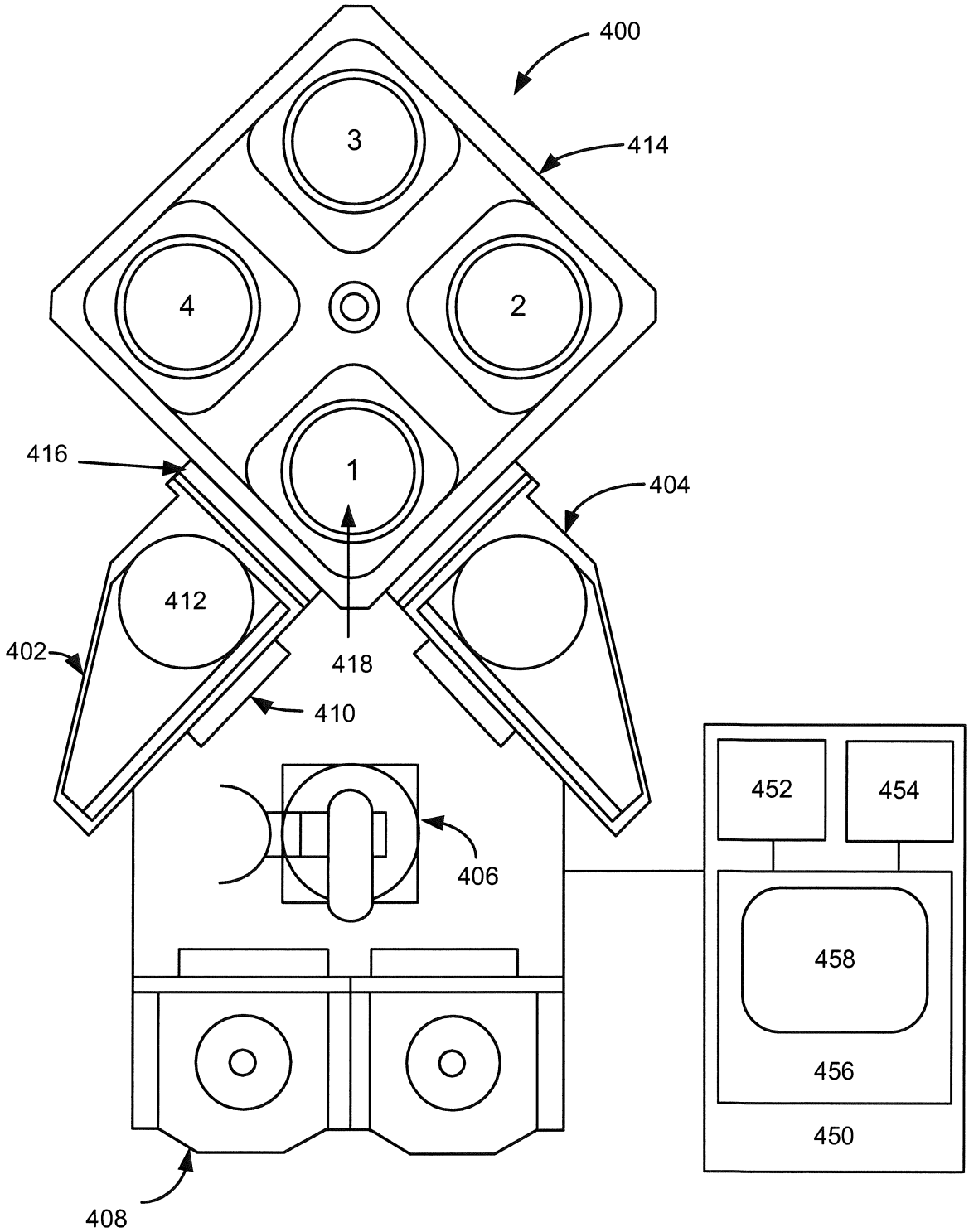

FIG. 4

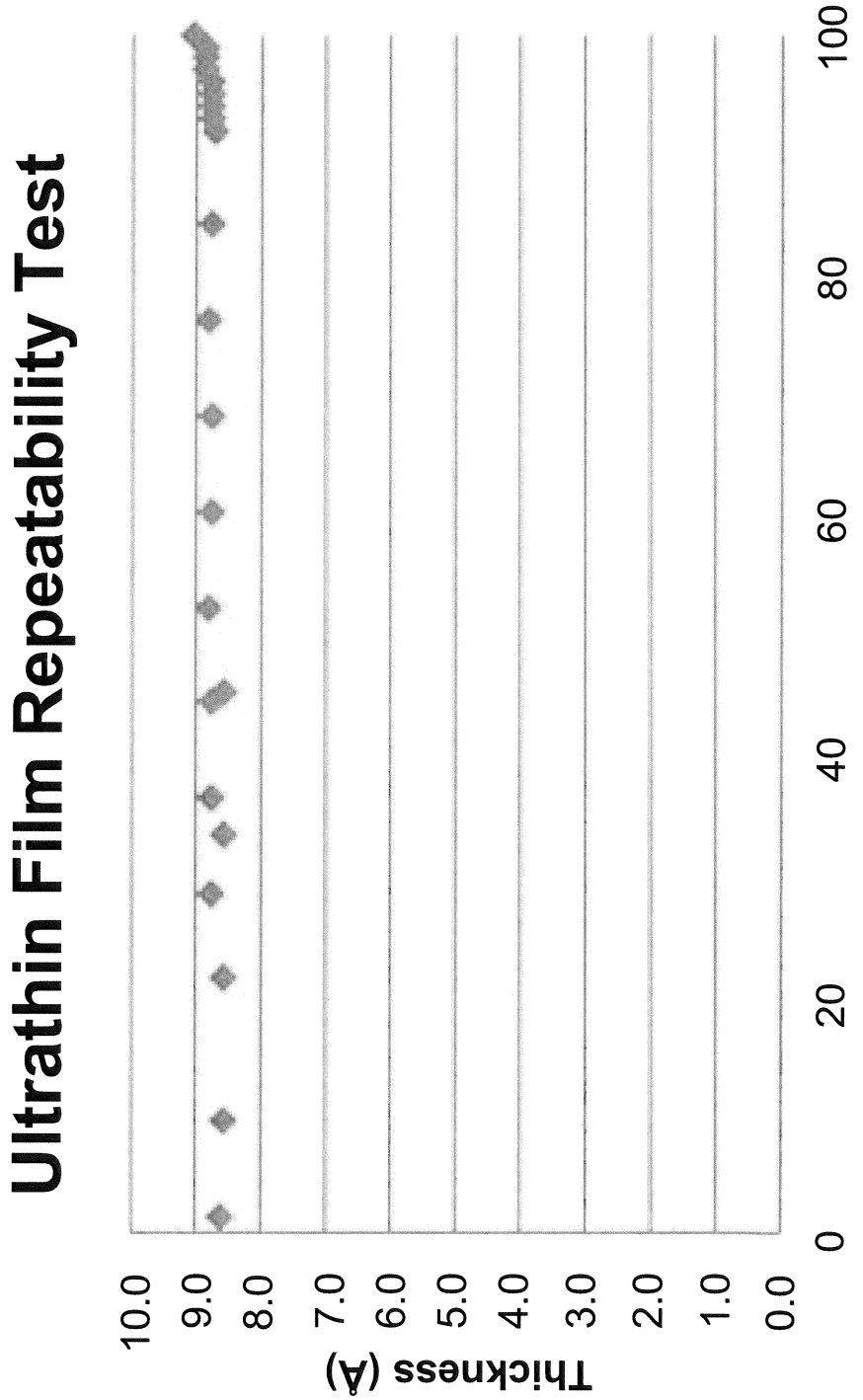
Ultrathin Film Repeatability Test
Thickness (Å)
10.0
9.0
8.0
7.0
6.0
5.0
4.0
3.0
2.0
1.0
0.0
0
20
40
60
80
100
Wafer #

FIG. 5