FIG. 1

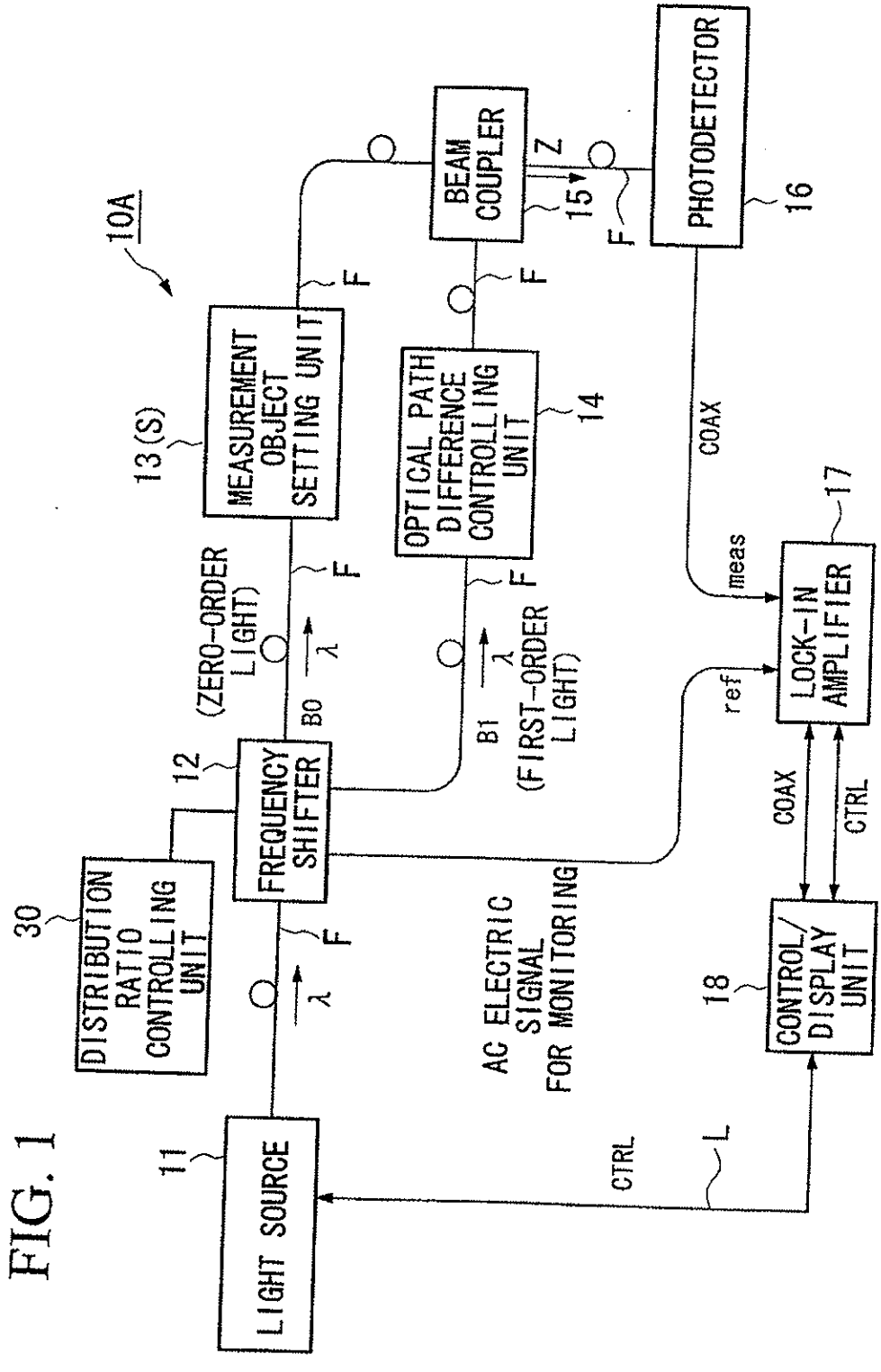
10A
LIGHT SOURCE
11
DISTRIBUTION RATIO CONTROLLING UNIT
30
FREQUENCY SHIFTER
12
MEASUREMENT OBJECT SETTING UNIT
13 (S)
OPTICAL PATH DIFFERENCE CONTROLLING UNIT
14
BEAM COUPLER
15
PHOTODETECTOR
16
LOCK-IN AMPLIFIER
17
CONTROL/ DISPLAY UNIT
18
(ZERO-ORDER LIGHT)
(FIRST-ORDER LIGHT)
B0
B1
λ
F
Z
COAX
meas
ref
CTRL
L
AC ELECTRIC SIGNAL FOR MONITORING

FIG. 2

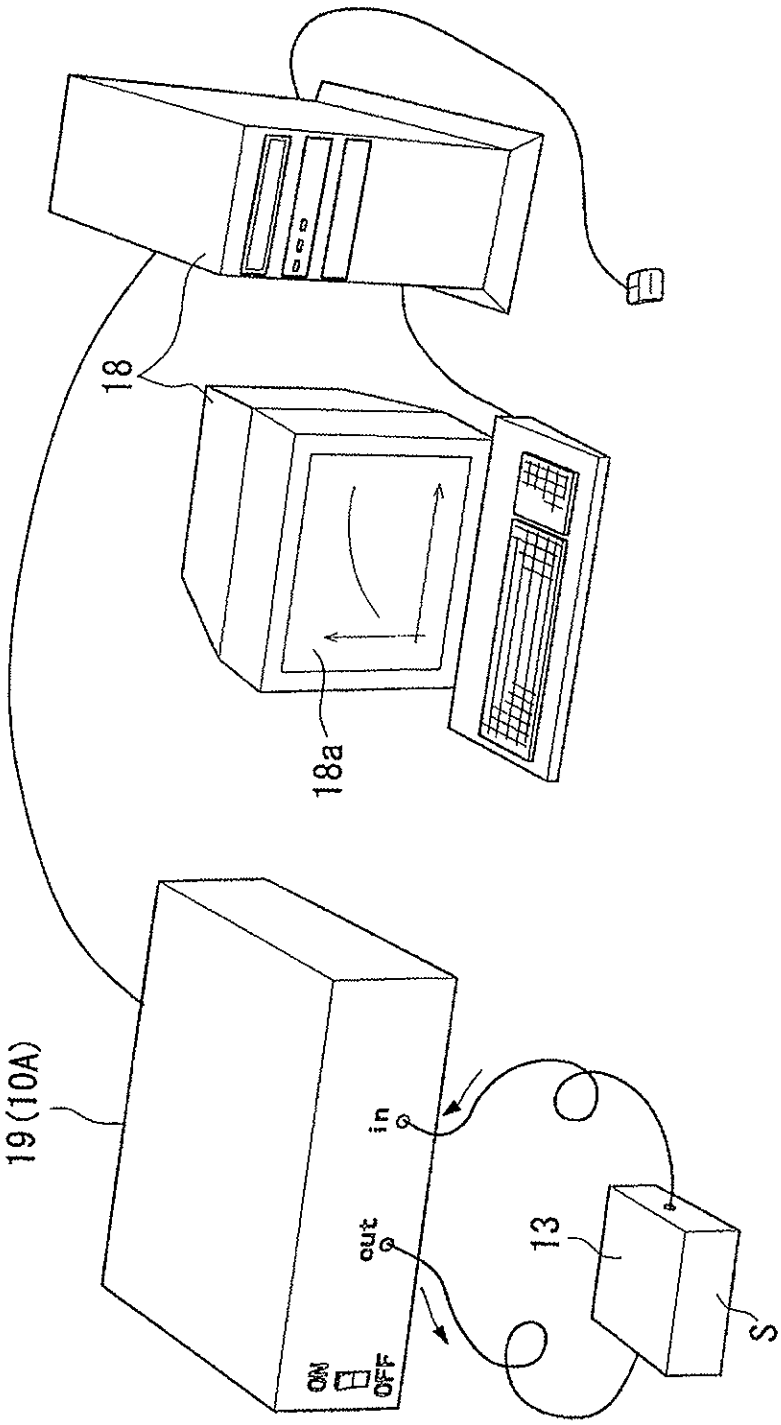

FIG. 3

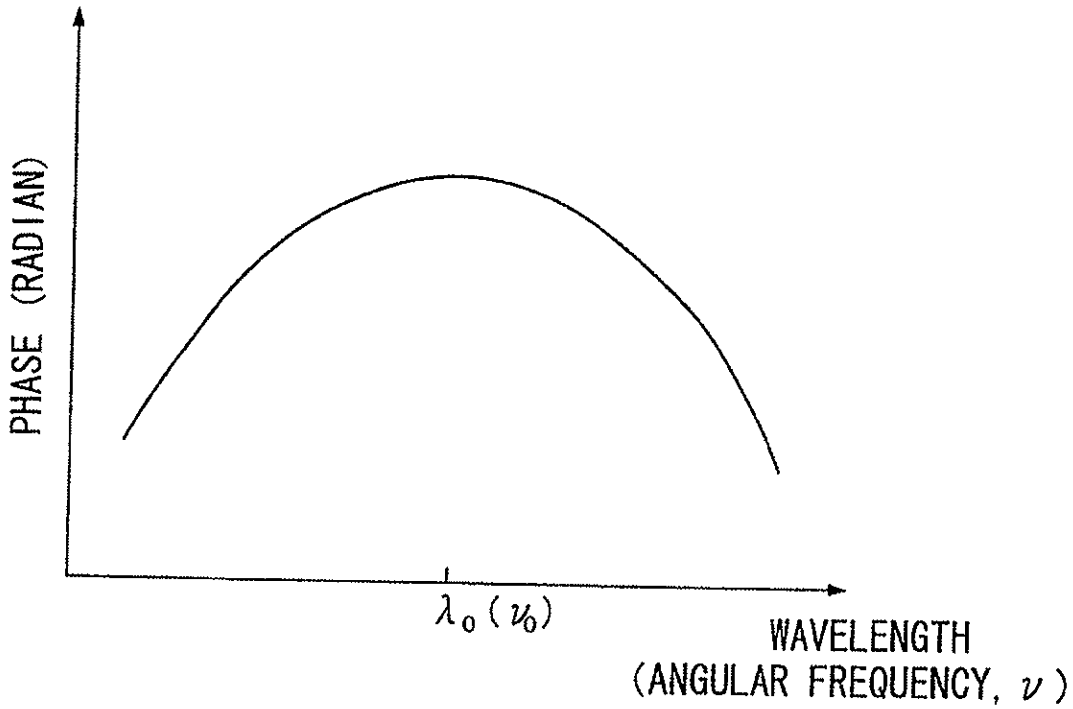

FIG. 4A

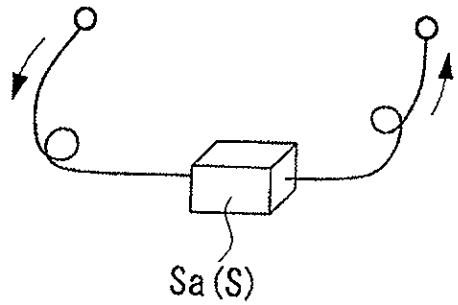

FIG. 4B

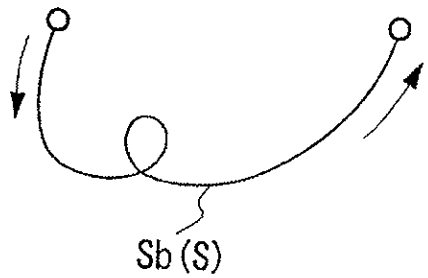

FIG. 4C

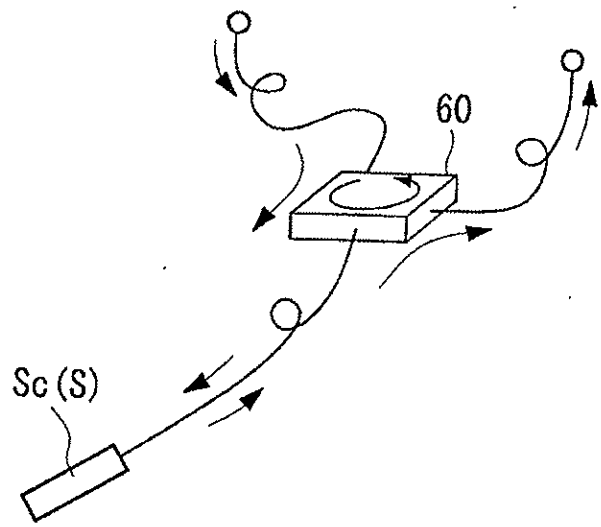

FIG. 5

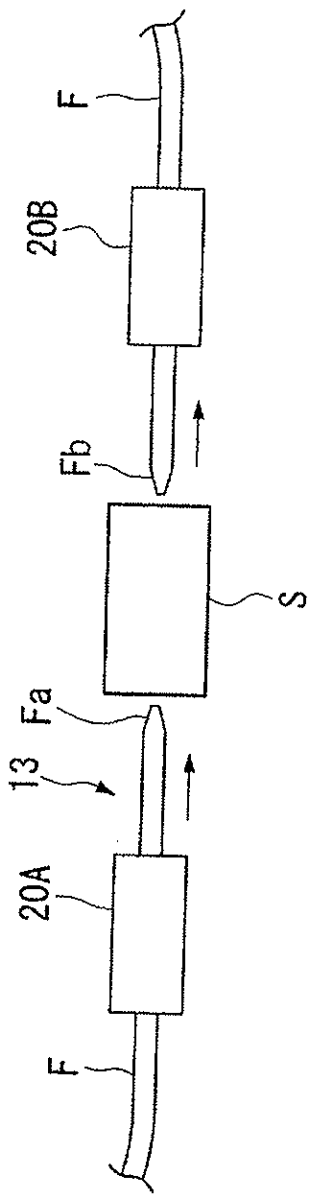

FIG. 6A

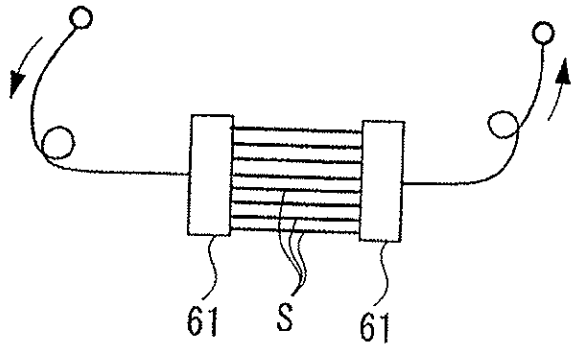

FIG. 6B

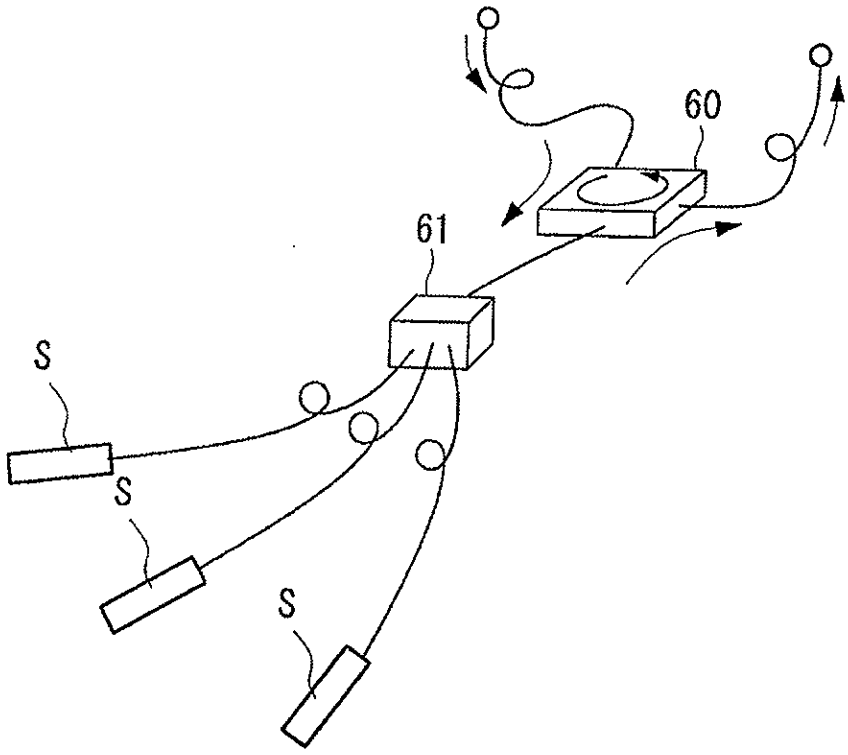

FIG. 7A

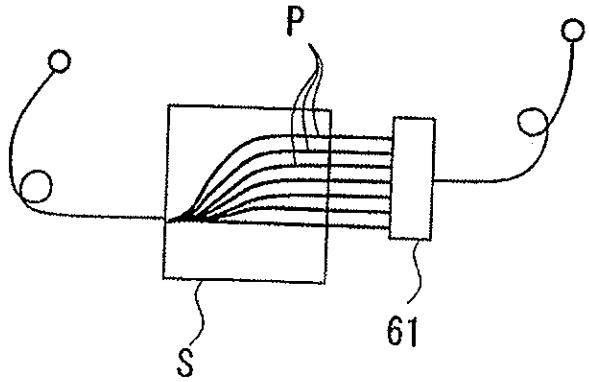

FIG. 7B

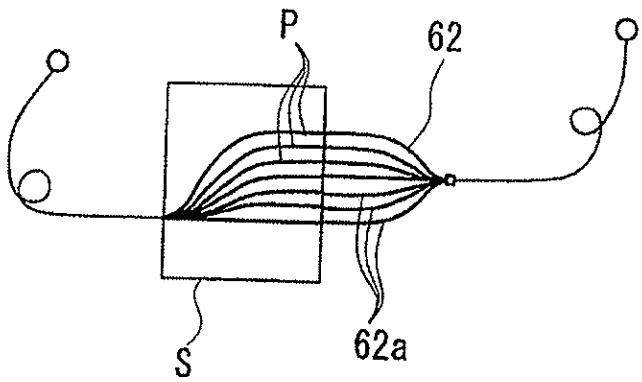

FIG. 8

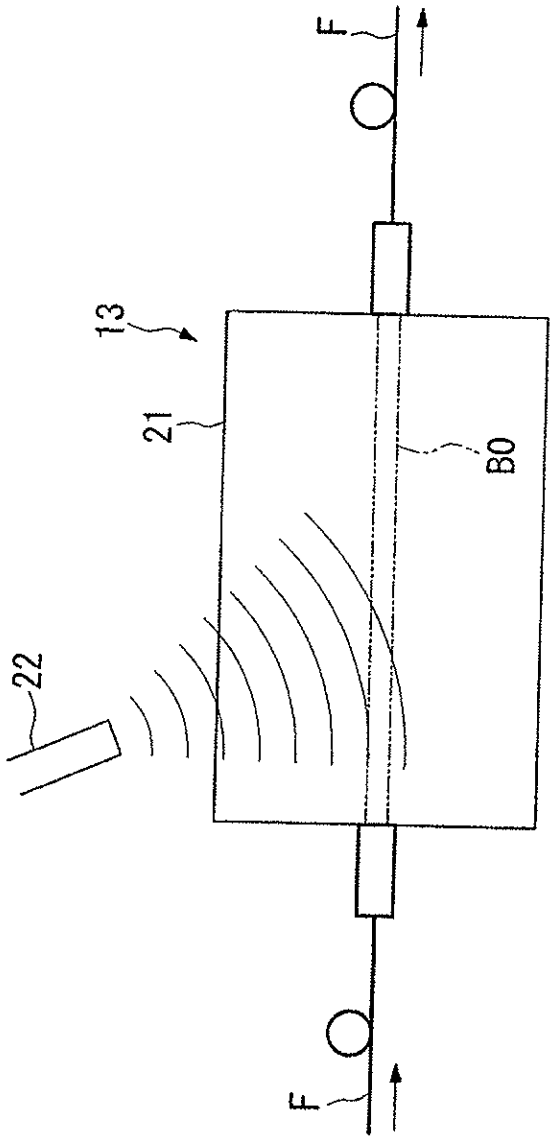

FIG. 9

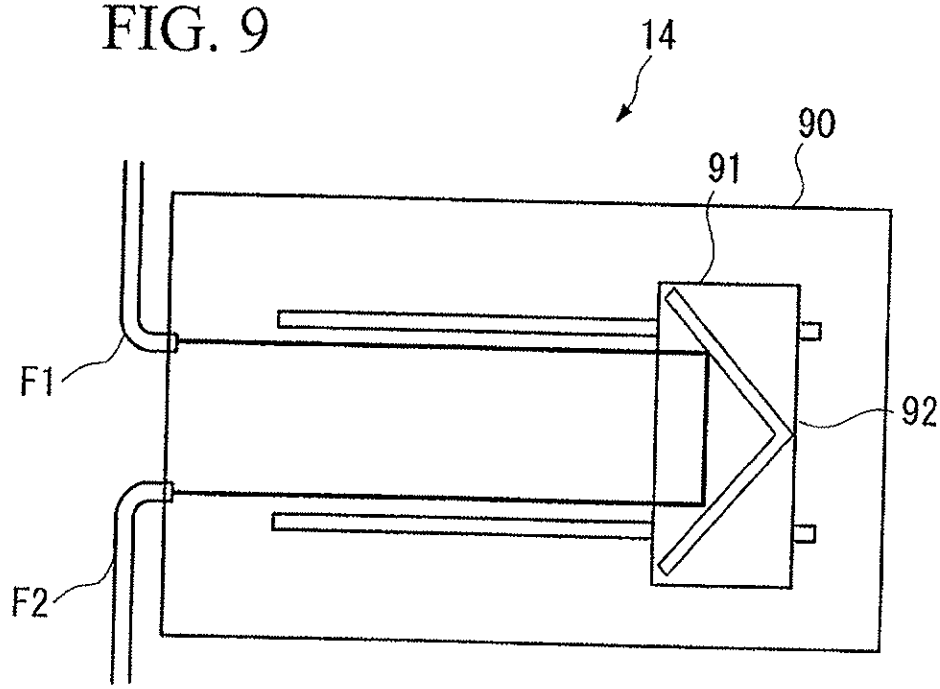

FIG. 10

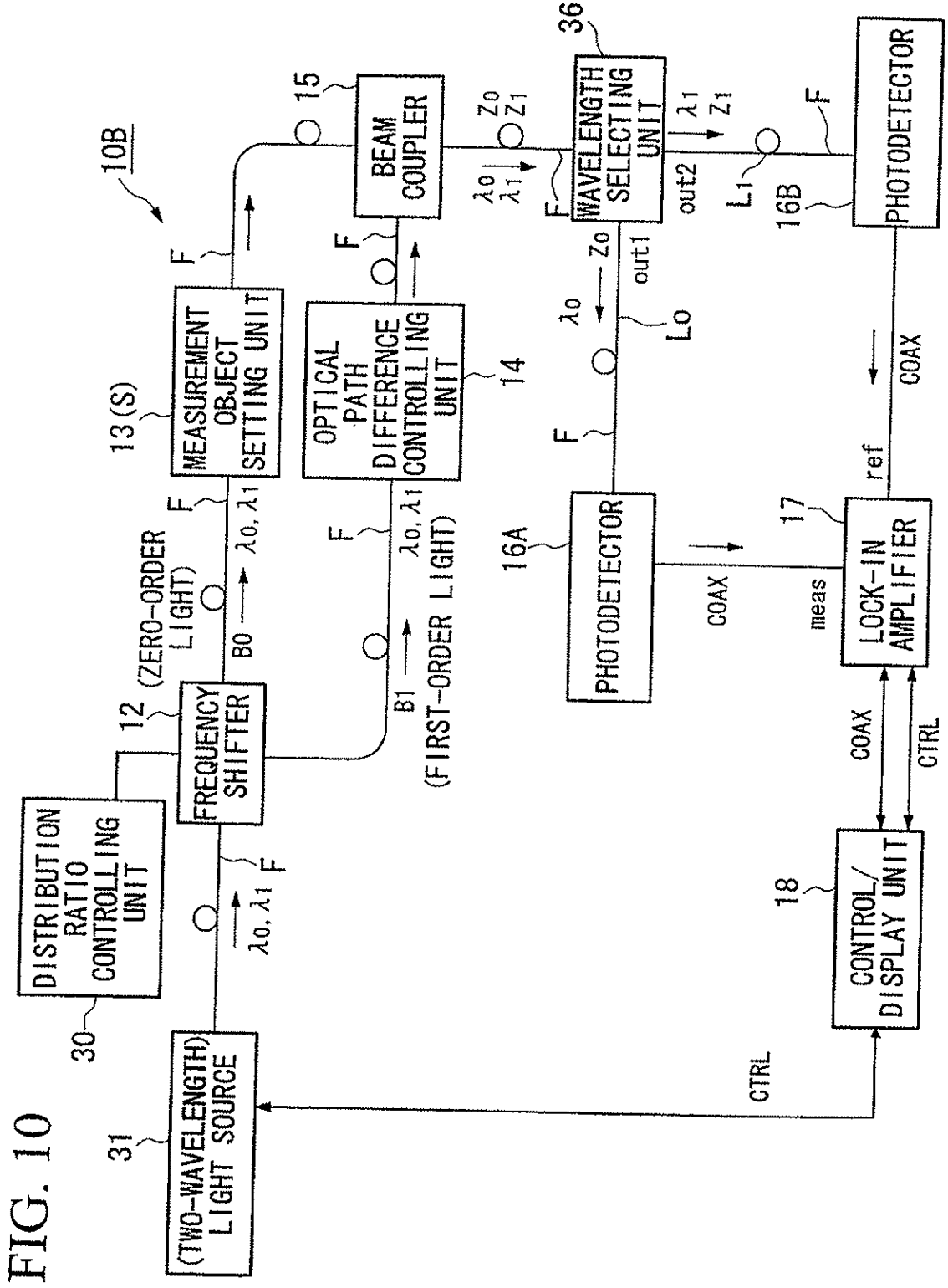
10B
DISTRIBUTION RATIO CONTROLLING UNIT
30
(TWO-WAVELENGTH) LIGHT SOURCE
31
FREQUENCY SHIFTER
12
(ZERO-ORDER LIGHT)
B0
B1
(FIRST-ORDER LIGHT)
MEASUREMENT OBJECT SETTING UNIT
13(S)
OPTICAL PATH DIFFERENCE CONTROLLING UNIT
14
BEAM COUPLER
15
WAVELENGTH SELECTING UNIT
36
PHOTODETECTOR
16A
PHOTODETECTOR
16B
LOCK-IN AMPLIFIER
17
CONTROL/ DISPLAY UNIT
18
F
λ0, λ1
λ0
λ1
Z0
Z1
out1
out2
L0
L1
COAX
CTRL
meas
ref

FIG. 11

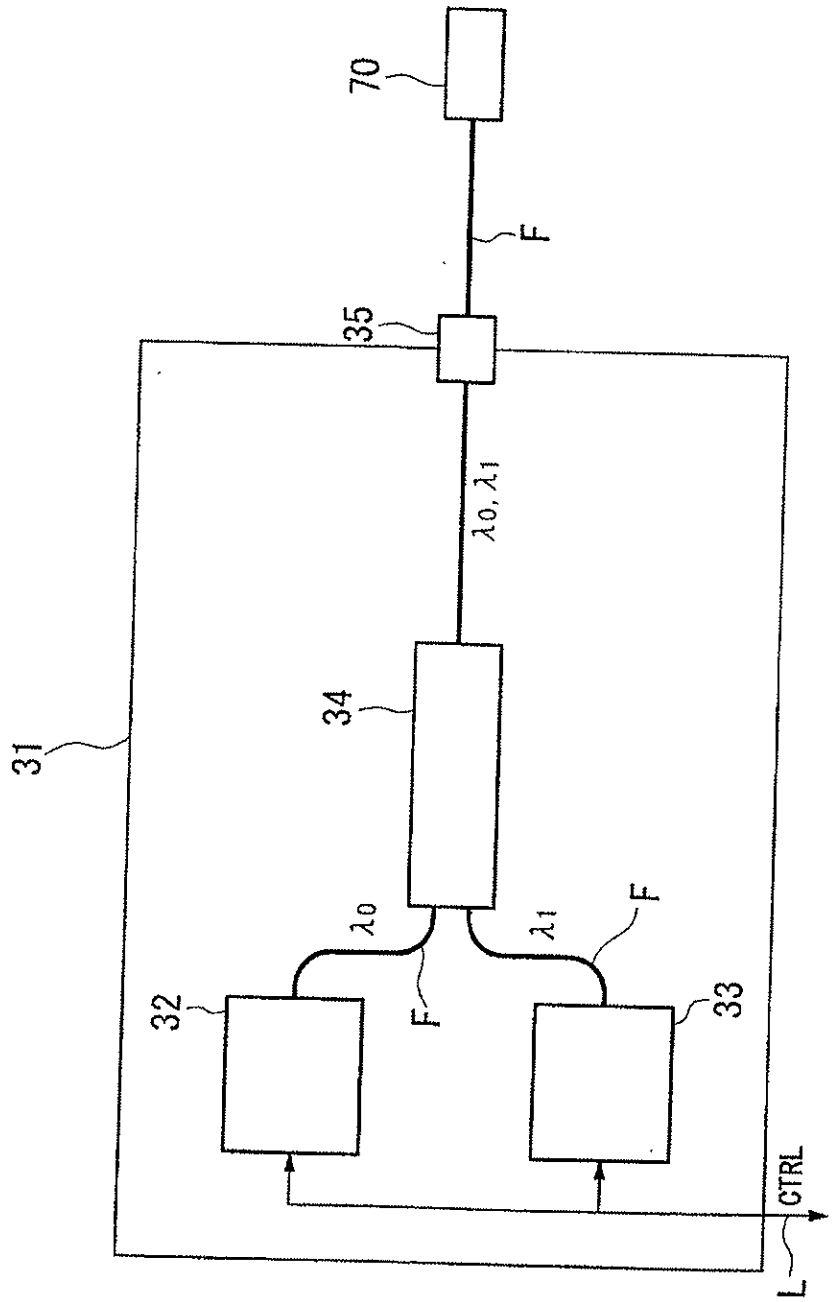

FIG. 12

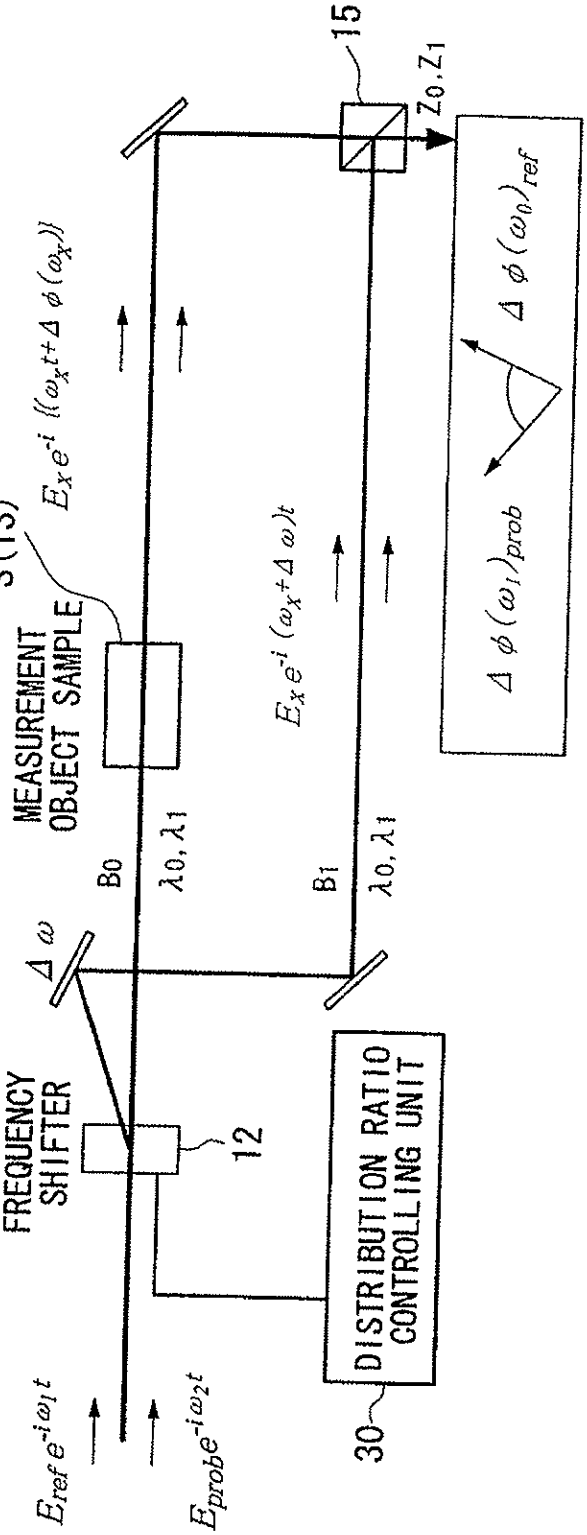
15
Z_0, Z_1
S(13)
MEASUREMENT OBJECT SAMPLE
$E_x e^{-i\{(\omega_x t + \Delta\phi(\omega_x)\}}$
$E_x e^{-i(\omega_x t + \Delta\omega)t}$
$\Delta\phi(\omega_1)_{prob}$
$\Delta\phi(\omega_0)_{ref}$
B_0
λ_0, λ_1
B_1
λ_0, λ_1
$\Delta\omega$
FREQUENCY SHIFTER
12
DISTRIBUTION RATIO CONTROLLING UNIT
30
$E_{ref} e^{-i\omega_1 t}$
$E_{prob} e^{-i\omega_2 t}$

FIG. 13

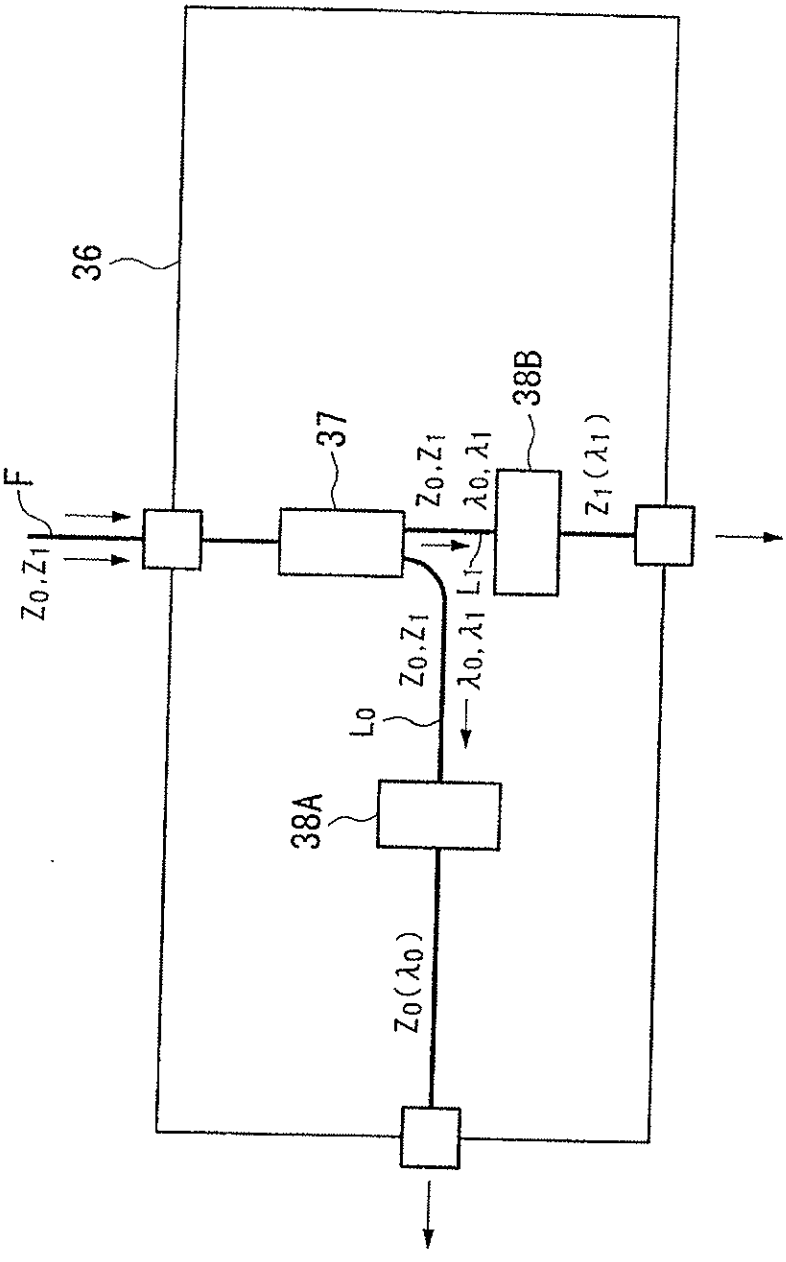

FIG. 14

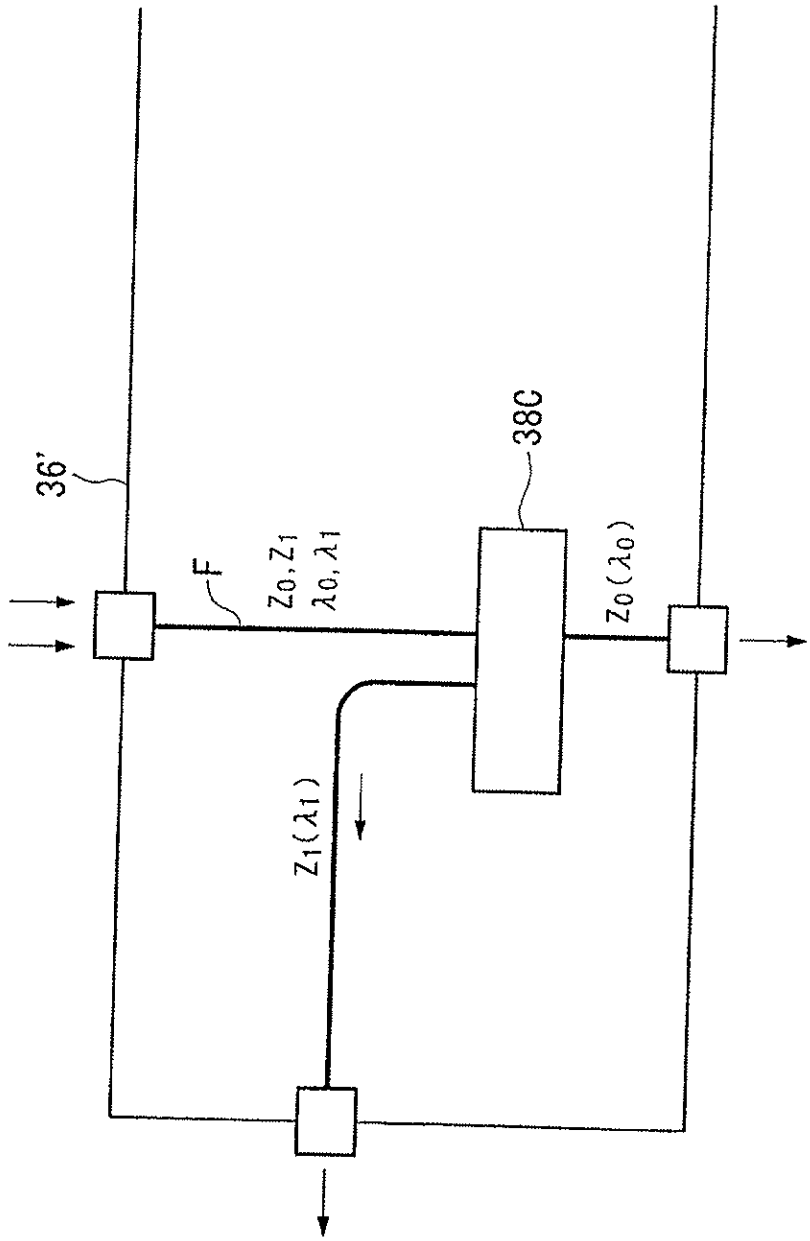

FIG. 15A

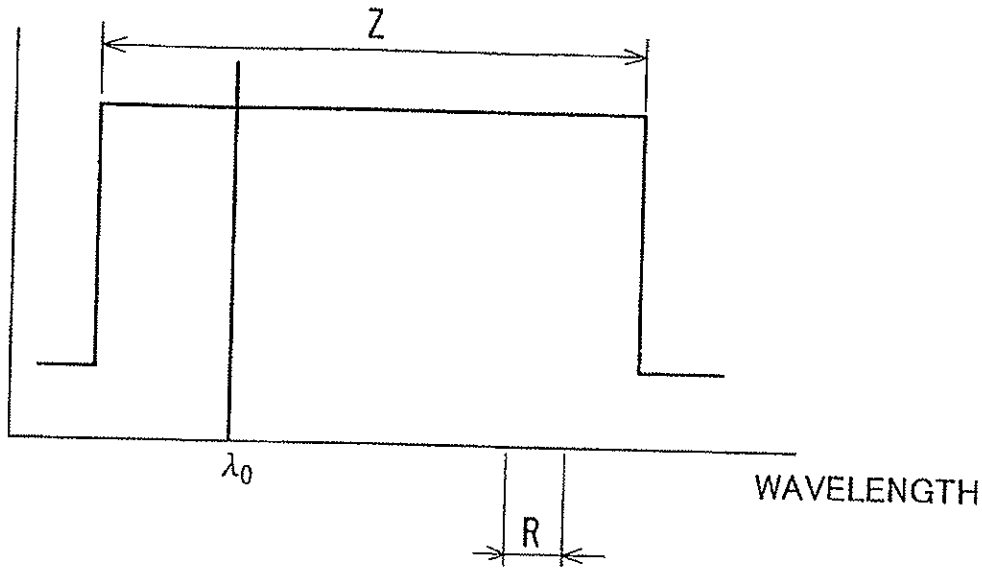

FIG. 15B

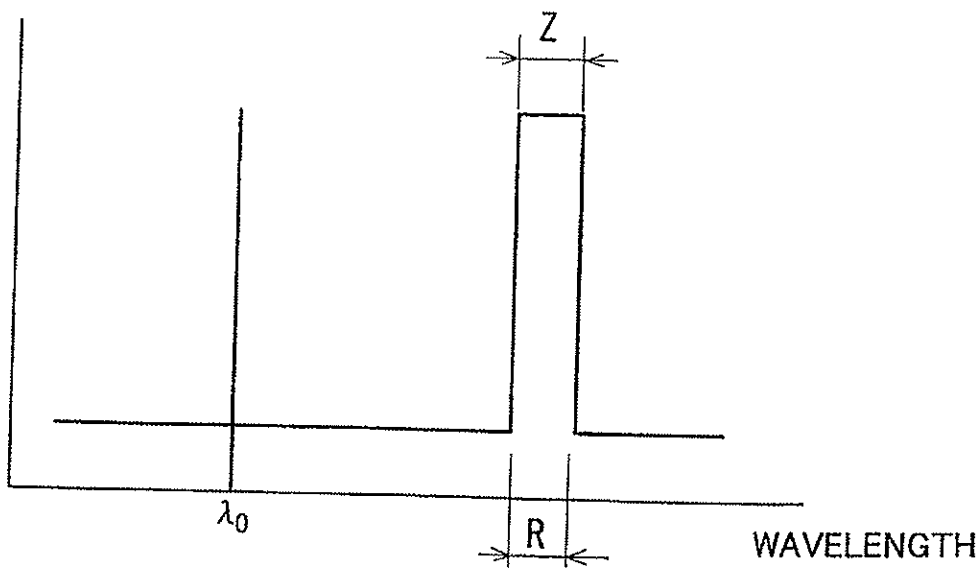

FIG. 16

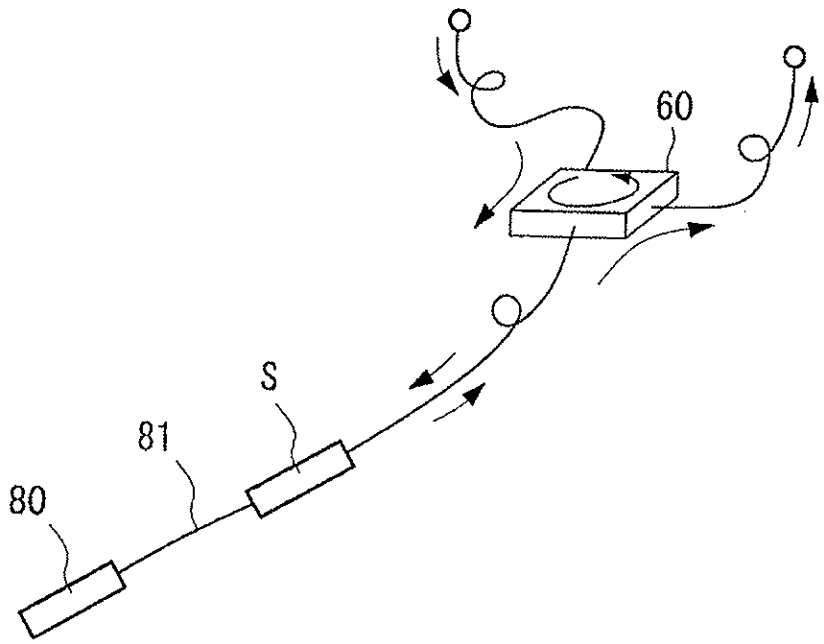

FIG. 17

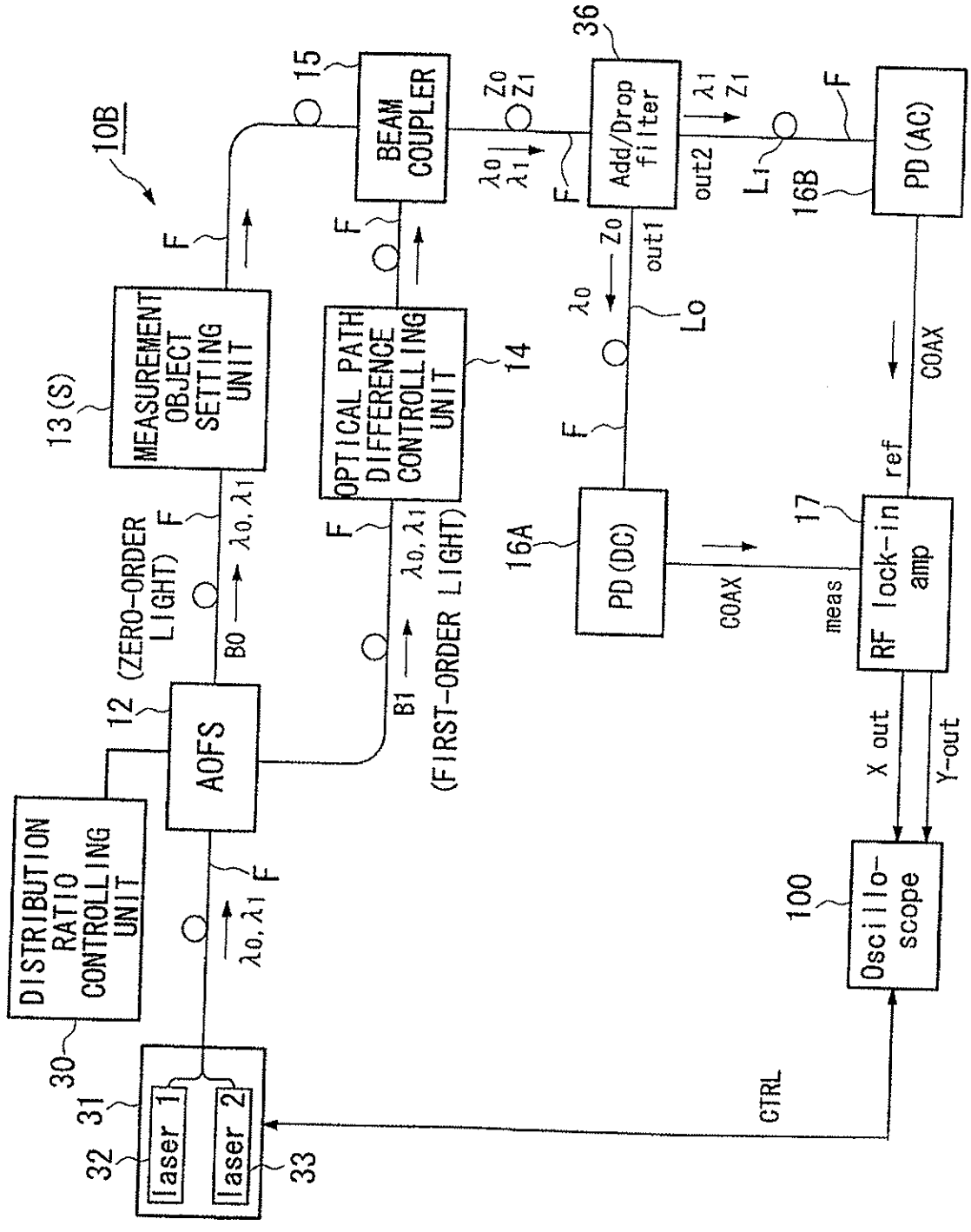
10B
DISTRIBUTION RATIO CONTROLLING UNIT
30
laser 1
laser 2
31
32
33
AOFS
12
(ZERO-ORDER LIGHT)
(FIRST-ORDER LIGHT)
B0
B1
λ0, λ1
F
MEASUREMENT OBJECT SETTING UNIT
13 (S)
OPTICAL PATH DIFFERENCE CONTROLLING UNIT
14
BEAM COUPLER
15
Z0
Z1
λ0
λ1
Add/Drop filter
36
out1
out2
Lo
L1
PD (DC)
16A
PD (AC)
16B
RF lock-in amp
17
meas
ref
COAX
X out
Y-out
CTRL
Oscillo-scope
100

FIG. 18

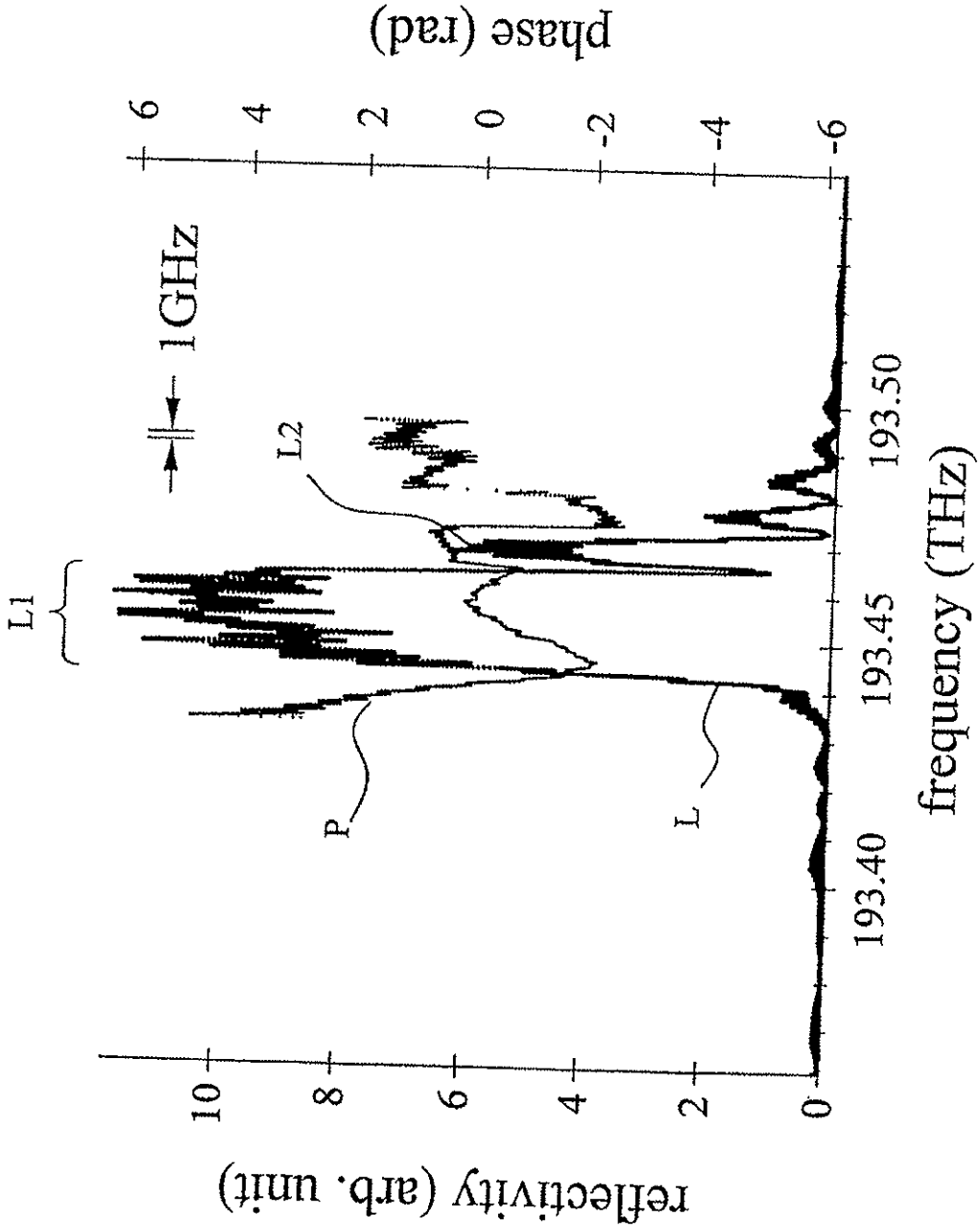
reflectivity (arb. unit)
phase (rad)
frequency (THz)
193.40
193.45
193.50
1GHz
L1
L2
P
L

FIG. 19

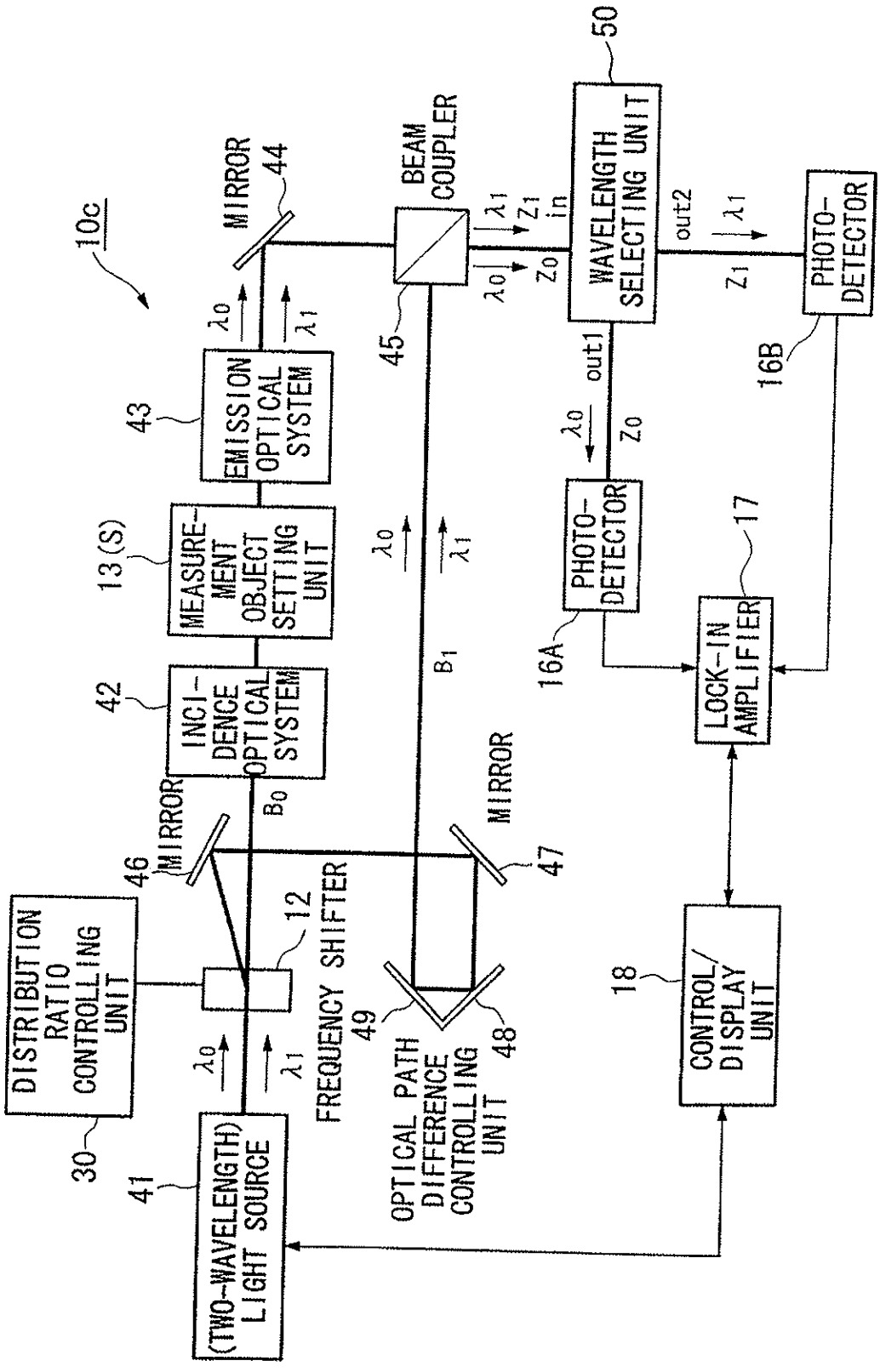
10c
(TWO-WAVELENGTH) LIGHT SOURCE
41
DISTRIBUTION RATIO CONTROLLING UNIT
30
FREQUENCY SHIFTER
12
MIRROR
46
INCIDENCE OPTICAL SYSTEM
42
MEASUREMENT OBJECT SETTING UNIT
13 (S)
EMISSION OPTICAL SYSTEM
43
MIRROR
44
BEAM COUPLER
45
MIRROR
47
OPTICAL PATH DIFFERENCE CONTROLLING UNIT
49
48
WAVELENGTH SELECTING UNIT
50
PHOTO-DETECTOR
16A
PHOTO-DETECTOR
16B
LOCK-IN AMPLIFIER
17
CONTROL/DISPLAY UNIT
18
λ0
λ1
B0
B1
Z0
Z1
in
out1
out2

FIG. 20

