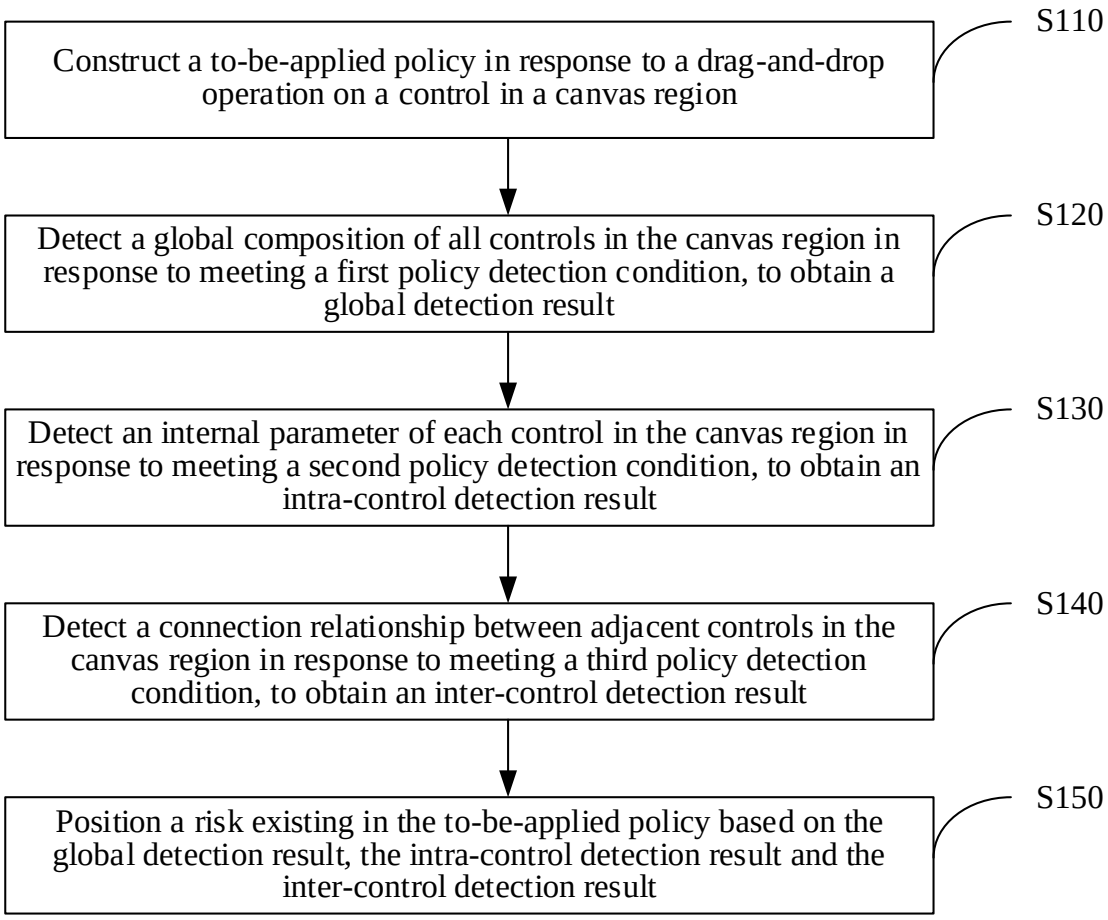
Construct a to-be-applied policy in response to a drag-and-drop operation on a control in a canvas region
S110
Detect a global composition of all controls in the canvas region in response to meeting a first policy detection condition, to obtain a global detection result
S120
Detect an internal parameter of each control in the canvas region in response to meeting a second policy detection condition, to obtain an intra-control detection result
S130
Detect a connection relationship between adjacent controls in the canvas region in response to meeting a third policy detection condition, to obtain an inter-control detection result
S140
Position a risk existing in the to-be-applied policy based on the global detection result, the intra-control detection result and the inter-control detection result
S150

FIG. 1

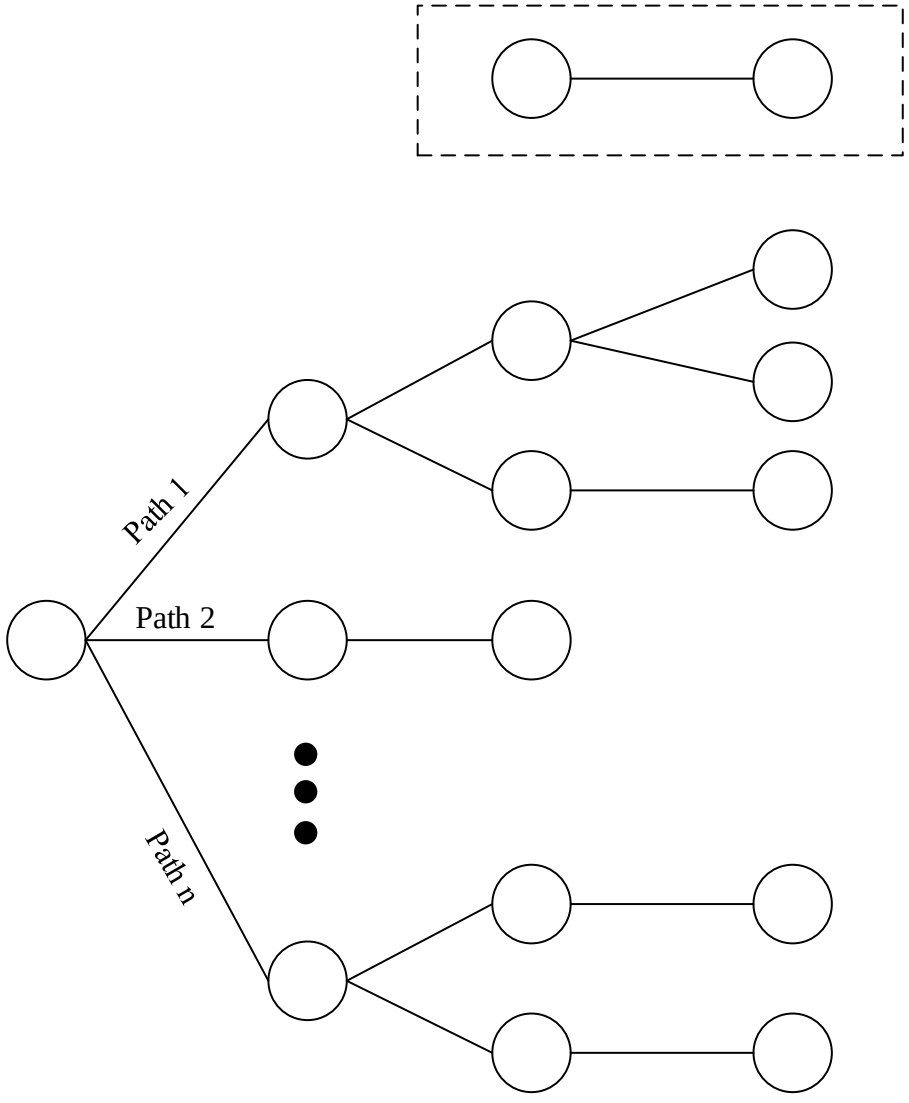

FIG. 2

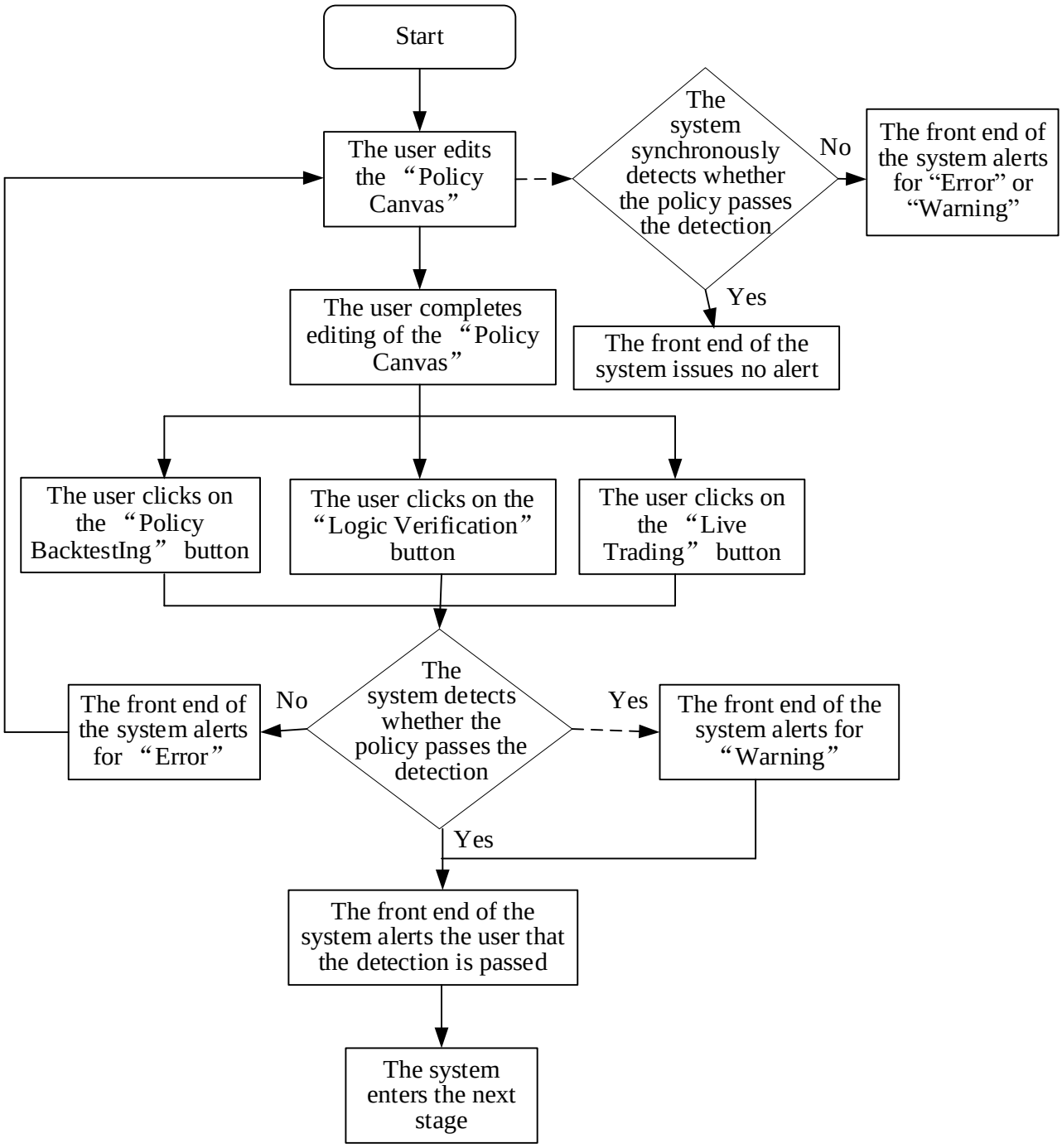
Start
The user edits the “Policy Canvas”
The system synchronously detects whether the policy passes the detection
No
The front end of the system alerts for “Error” or “Warning”
Yes
The front end of the system issues no alert
The user completes editing of the “Policy Canvas”
The user clicks on the “Policy BacktestIng” button
The user clicks on the “Logic Verification” button
The user clicks on the “Live Trading” button
The system detects whether the policy passes the detection
No
The front end of the system alerts for “Error”
Yes
The front end of the system alerts for “Warning”
Yes
The front end of the system alerts the user that the detection is passed
The system enters the next stage

FIG. 3

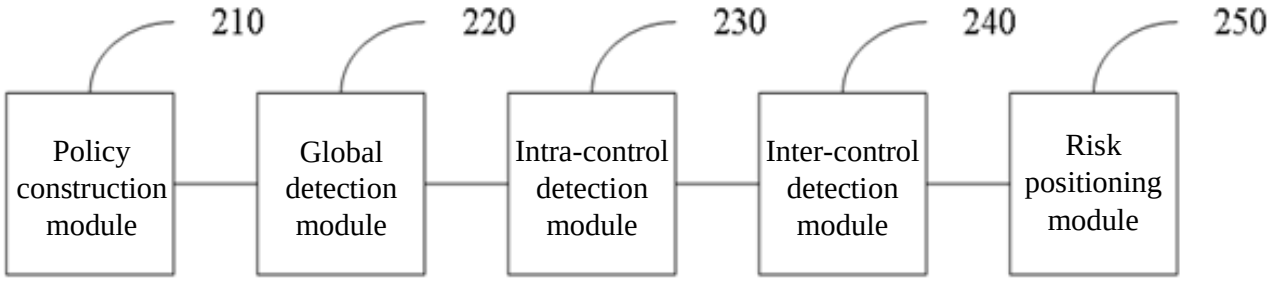
210
220
230
240
250
Policy construction module
Global detection module
Intra-control detection module
Inter-control detection module
Risk positioning module

FIG. 4

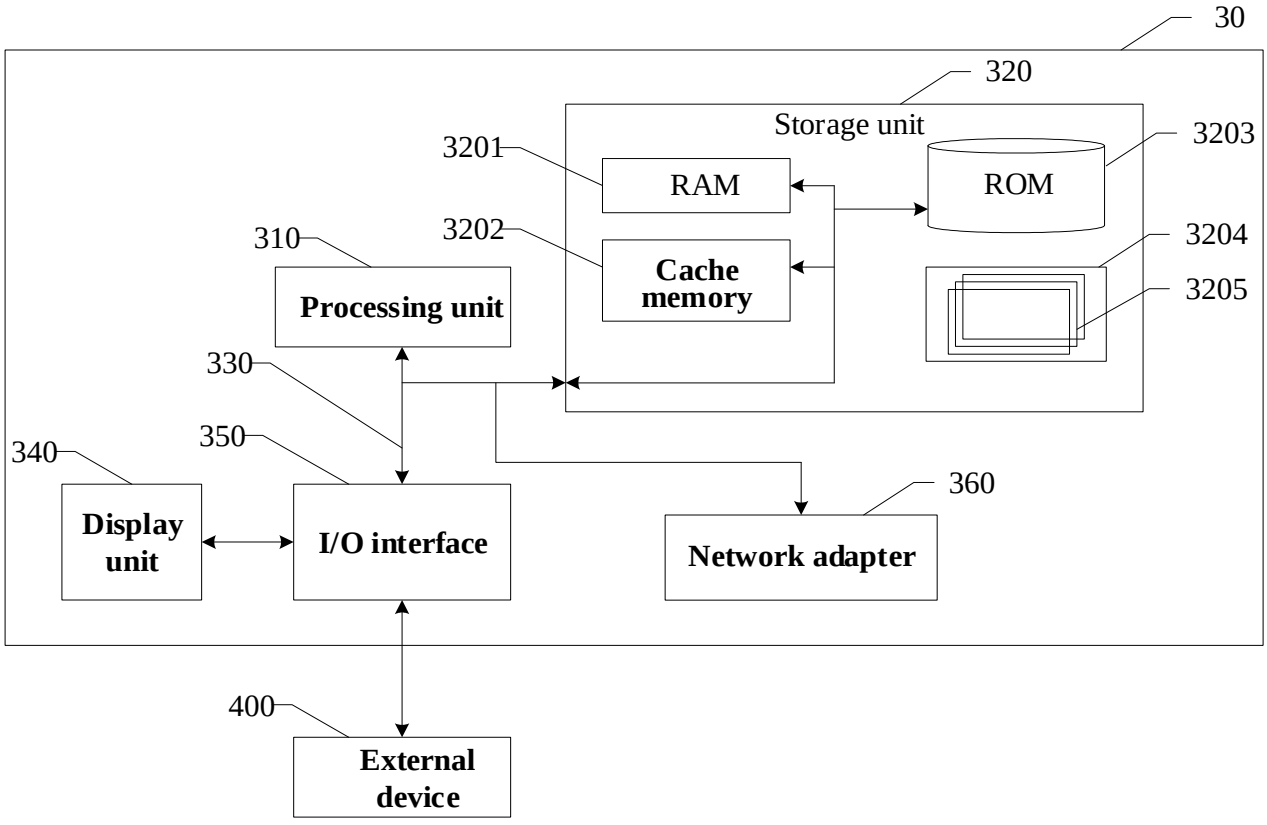
30
320
Storage unit
3201
RAM
ROM
3203
3202
Cache memory
3204
3205
310
Processing unit
330
350
340
360
Display unit
I/O interface
Network adapter
400
External device

FIG. 5