(12) INTERNATIONAL APPLICATION PUBLISHED UNDER THE PATENT COOPERATION TREATY (PCT)

(19) World Intellectual Property Organization
International Bureau

(43) International Publication Date
18 September 2025 (18.09.2025)

WIPO | PCT

(10) International Publication Number
WO 2025/193461 A1

(51) International Patent Classification:
G02B 3/00 (2006.01) *G02B 27/01* (2006.01)
G02B 6/00 (2006.01) *G02B 27/00* (2006.01)

(21) International Application Number:
PCT/US2025/018203

(22) International Filing Date:
03 March 2025 (03.03.2025)

(25) Filing Language: English

(26) Publication Language: English

(30) Priority Data:
63/563,711 11 March 2024 (11.03.2024) US

(71) Applicant: **APPLIED MATERIALS, INC.** [US/US]; 3050 Bowers Avenue, Santa Clara, California 95054 (US).

(72) Inventors: **KIM, Namho**; c/o Applied Materials, Inc., Law Dept., MS/1269, 3050 Bowers Avenue, Santa Clara, California 95054 (US). **GODET, Ludovic**; c/o Applied Materials, Inc. Law Dept., M/s 1269, 3050 Bowers Avenue, Santa Clara, California 95054 (US). **LUO, Yingdong**; c/o Applied Materials, Inc., Law Dept., M/S 1269, 3050 Bowers Avenue, Santa Clara, California 95054 (US). **YAO, Zhengping**; c/o Applied Materials, Inc. Law Dept., M/s 1269, 3050 Bowers Avenue, Santa Clara, California 95054 (US). **ZHANG, Daihua**; c/o Applied Materials, Inc. Law Dept., M/s 1269, 3050 Bowers Avenue, Santa Clara, California 95054 (US).

(74) Agent: **PATTERSON, B. Todd** et al.; 24 Greenway Plaza, Suite 1600, Houston, Texas 77046 (US).

(81) Designated States *(unless otherwise indicated, for every kind of national protection available)*: AE, AG, AL, AM, AO, AT, AU, AZ, BA, BB, BG, BH, BN, BR, BW, BY, BZ, CA, CH, CL, CN, CO, CR, CU, CV, CZ, DE, DJ, DK, DM, DO, DZ, EC, EE, EG, ES, FI, GB, GD, GE, GH, GM, GT, HN, HR, HU, ID, IL, IN, IQ, IR, IS, IT, JM, JO, JP, KE, KG, KH, KN, KP, KR, KW, KZ, LA, LC, LK, LR, LS, LU, LY, MA, MD, MG, MK, MN, MU, MW, MX, MY, MZ, NA, NG, NI, NO, NZ, OM, PA, PE, PG, PH, PL, PT, QA, RO, RS, RU, RW, SA, SC, SD, SE, SG, SK, SL, ST, SV, SY, TH, TJ, TM, TN, TR, TT, TZ, UA, UG, US, UY, UZ, VC, VN, WS, ZA, ZM, ZW.

(84) Designated States *(unless otherwise indicated, for every kind of regional protection available)*: ARIPO (BW, CV, GH, GM, KE, LR, LS, MW, MZ, NA, RW, SC, SD, SL, ST, SZ, TZ, UG, ZM, ZW), Eurasian (AM, AZ, BY, KG, KZ, RU, TJ, TM), European (AL, AT, BE, BG, CH, CY, CZ, DE, DK, EE, ES, FI, FR, GB, GR, HR, HU, IE, IS, IT, LT, LU, LV, MC, ME, MK, MT, NL, NO, PL, PT, RO, RS, SE,

(54) Title: SUBSTRATE-LEVEL MONOLITHIC INTEGRATION OF PRESCRIPTION LENS WITH AUGMENTED REALITY (AR) WAVEGUIDES

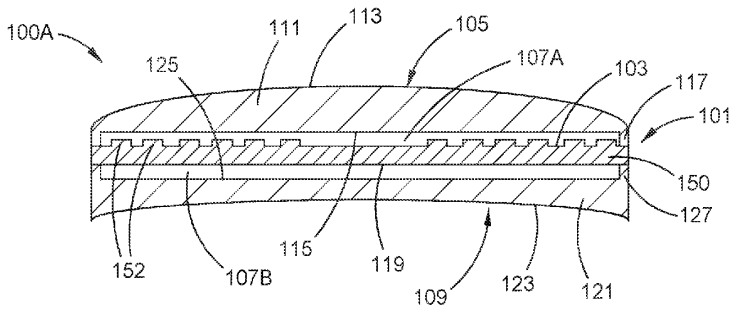

FIG. 1B

(57) Abstract: Embodiments described herein relate to AR waveguides with attached prescription lenses. In one embodiment, an eye-piece is provided. The eye-piece includes a waveguide, a convex prescription lens, a first gap, a concave prescription lens, and a second gap. The waveguide includes a substrate with a first surface and a second surface. The convex prescription lens is disposed over the waveguide on the first surface. The convex prescription lens has a first body with a convex surface and a lower surface. The first gap is defined by the lower surface and a first extension of the convex prescription lens. The concave prescription lens is disposed over the waveguide on the second surface. The concave prescription lens has a second body with a concave surface and an upper surface. The second gap is defined by the upper surface and a second extension of the concave prescription lens.

WO 2025/193461 A1

[Continued on next page]

SI, SK, SM, TR), OAPI (BF, BJ, CF, CG, CI, CM, GA, GN, GQ, GW, KM, ML, MR, NE, SN, TD, TG).

Published:

— *with international search report (Art. 21(3))*