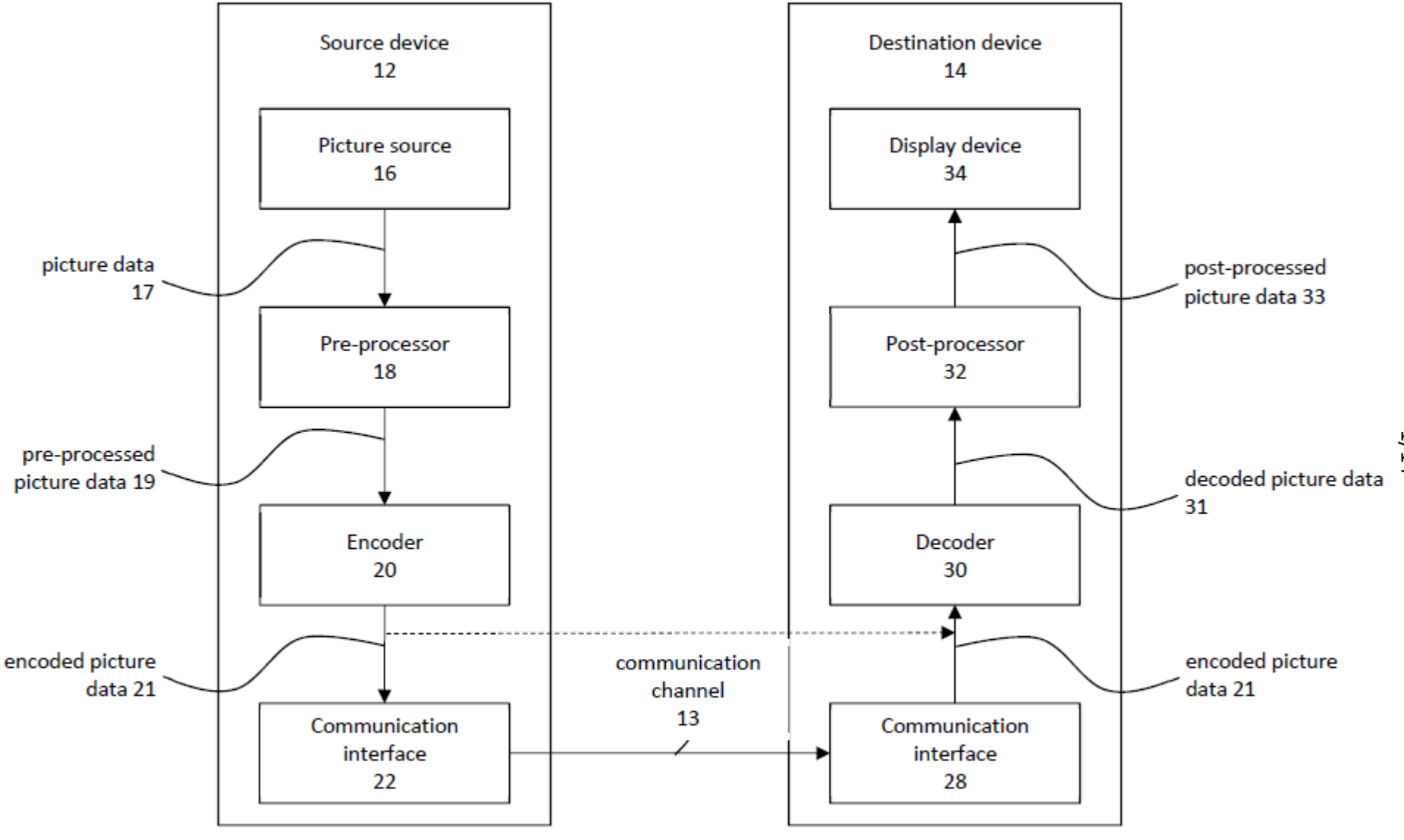
Source device
12
Picture source
16
picture data
17
Pre-processor
18
pre-processed
picture data 19
Encoder
20
encoded picture
data 21
Communication
interface
22
communication
channel
13
Destination device
14
Display device
34
post-processed
picture data 33
Post-processor
32
decoded picture data
31
Decoder
30
encoded picture
data 21
Communication
interface
28

10

Fig.1A

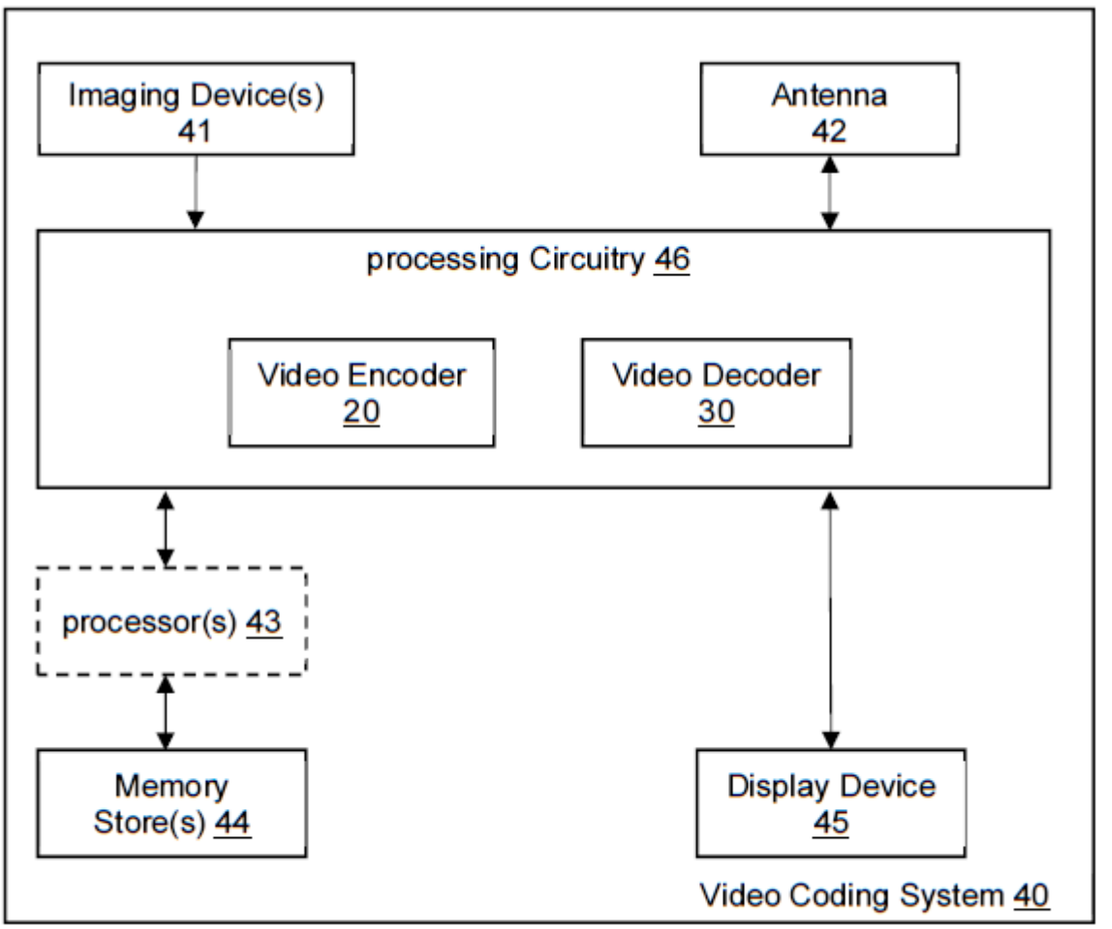
Imaging Device(s)
41
Antenna
42
processing Circuitry 46
Video Encoder
20
Video Decoder
30
processor(s) 43
Memory
Store(s) 44
Display Device
45
Video Coding System 40

Fig. 1B

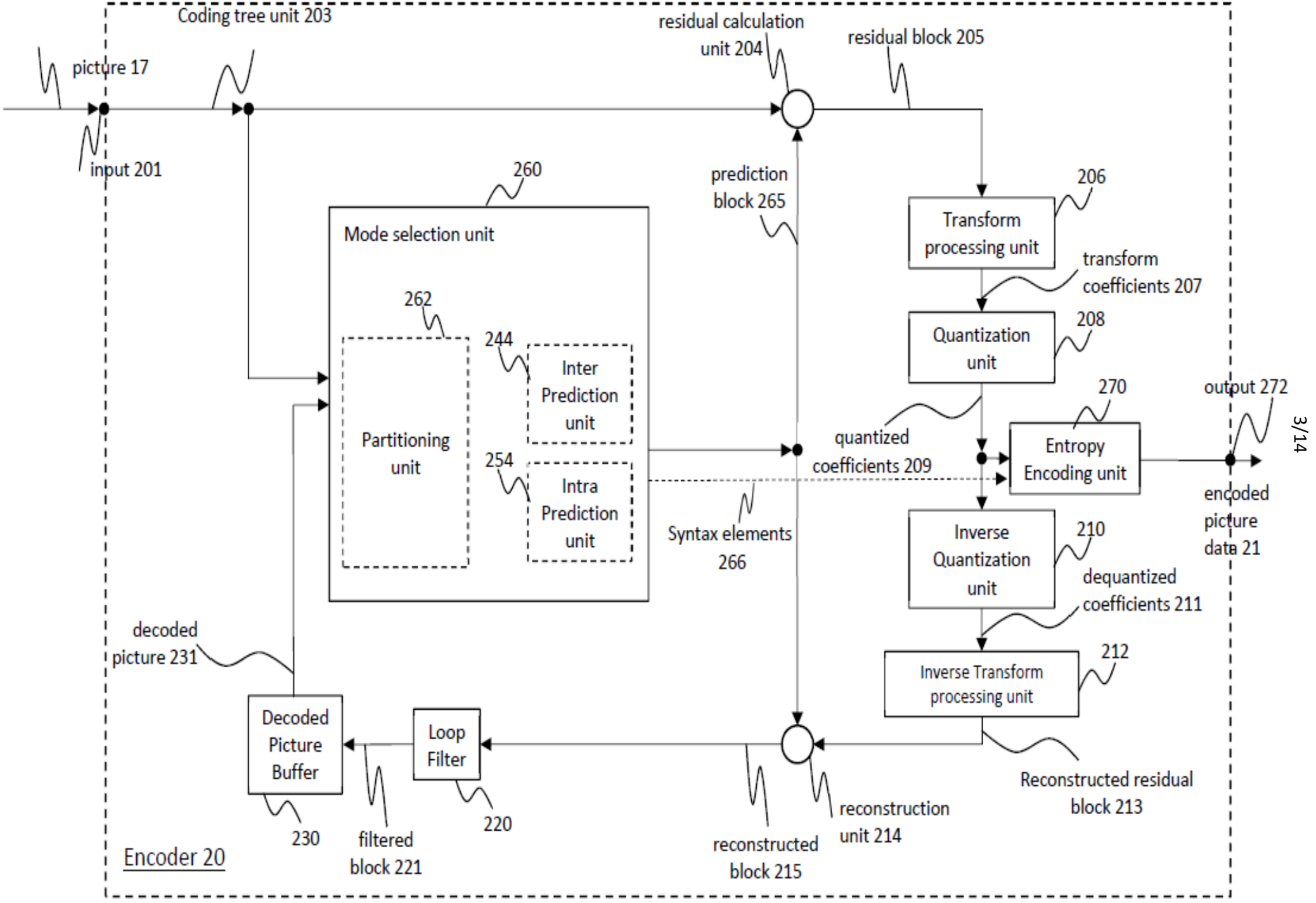
Coding tree unit 203
picture 17
input 201
residual calculation unit 204
residual block 205
prediction block 265
260
Mode selection unit
262
Partitioning unit
244
Inter Prediction unit
254
Intra Prediction unit
Syntax elements 266
206
Transform processing unit
transform coefficients 207
208
Quantization unit
quantized coefficients 209
270
Entropy Encoding unit
output 272
encoded picture data 21
210
Inverse Quantization unit
dequantized coefficients 211
212
Inverse Transform processing unit
Reconstructed residual block 213
reconstruction unit 214
reconstructed block 215
decoded picture 231
Decoded Picture Buffer
230
Loop Filter
220
filtered block 221
Encoder 20

Fig.2

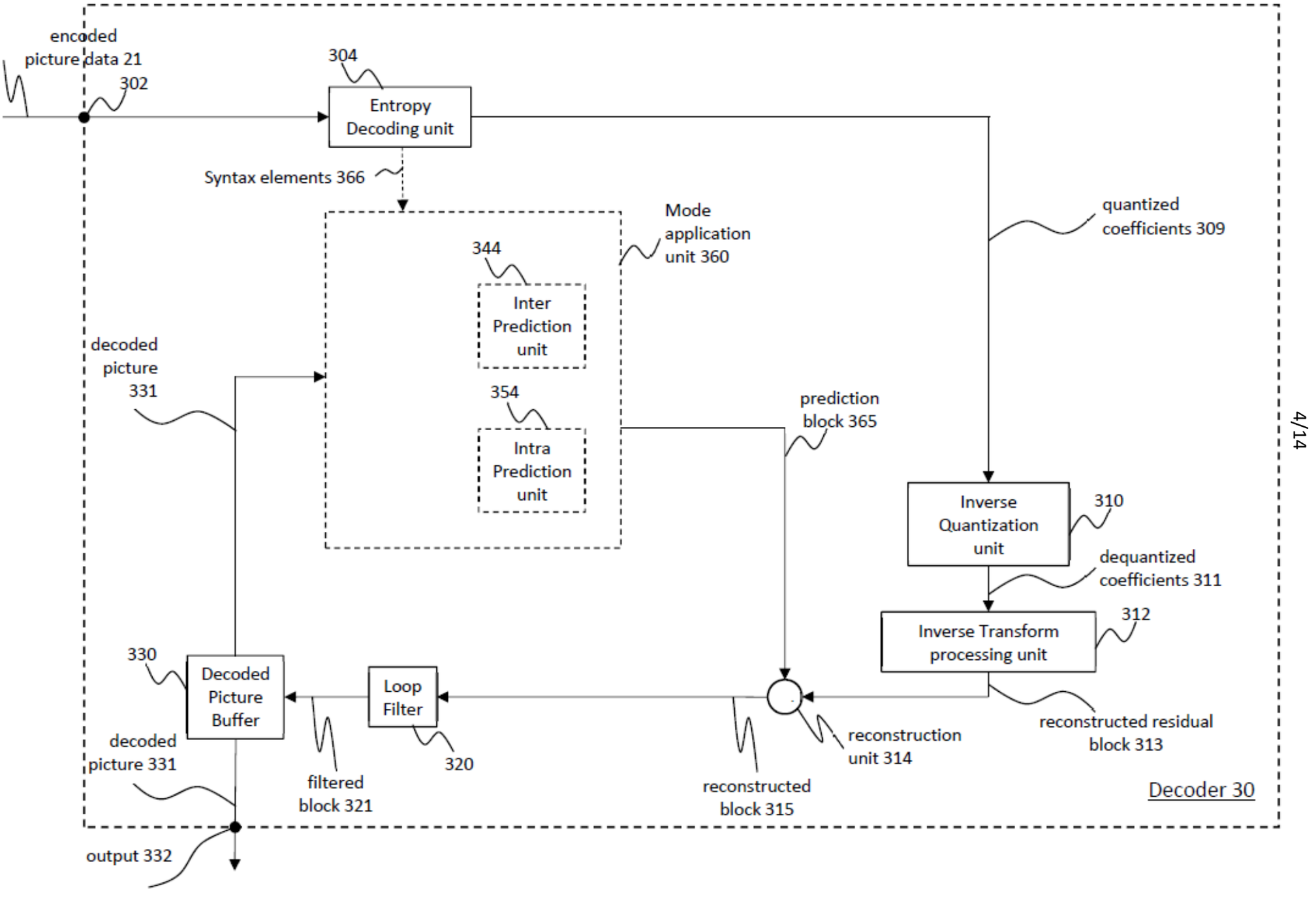
encoded picture data 21
302
304
Entropy Decoding unit
Syntax elements 366
Mode application unit 360
344
Inter Prediction unit
354
Intra Prediction unit
quantized coefficients 309
decoded picture 331
prediction block 365
Inverse Quantization unit
310
dequantized coefficients 311
Inverse Transform processing unit
312
reconstructed residual block 313
330
Decoded Picture Buffer
Loop Filter
320
filtered block 321
reconstruction unit 314
reconstructed block 315
decoded picture 331
output 332
Decoder 30

Fig.3

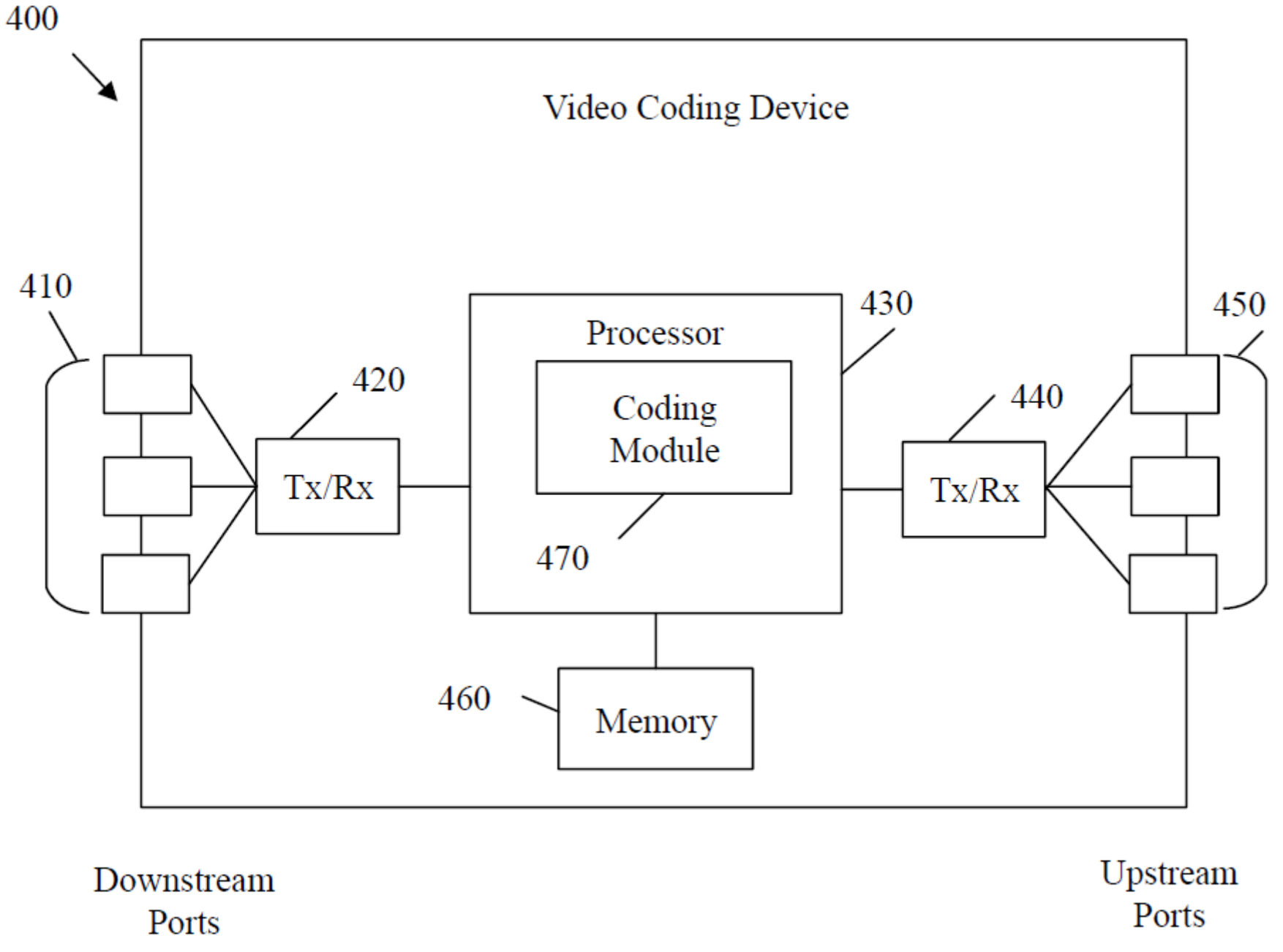
400
Video Coding Device
410
420
Tx/Rx
Processor
Coding
Module
430
470
440
Tx/Rx
450
460
Memory
Downstream
Ports
Upstream
Ports

Fig.4

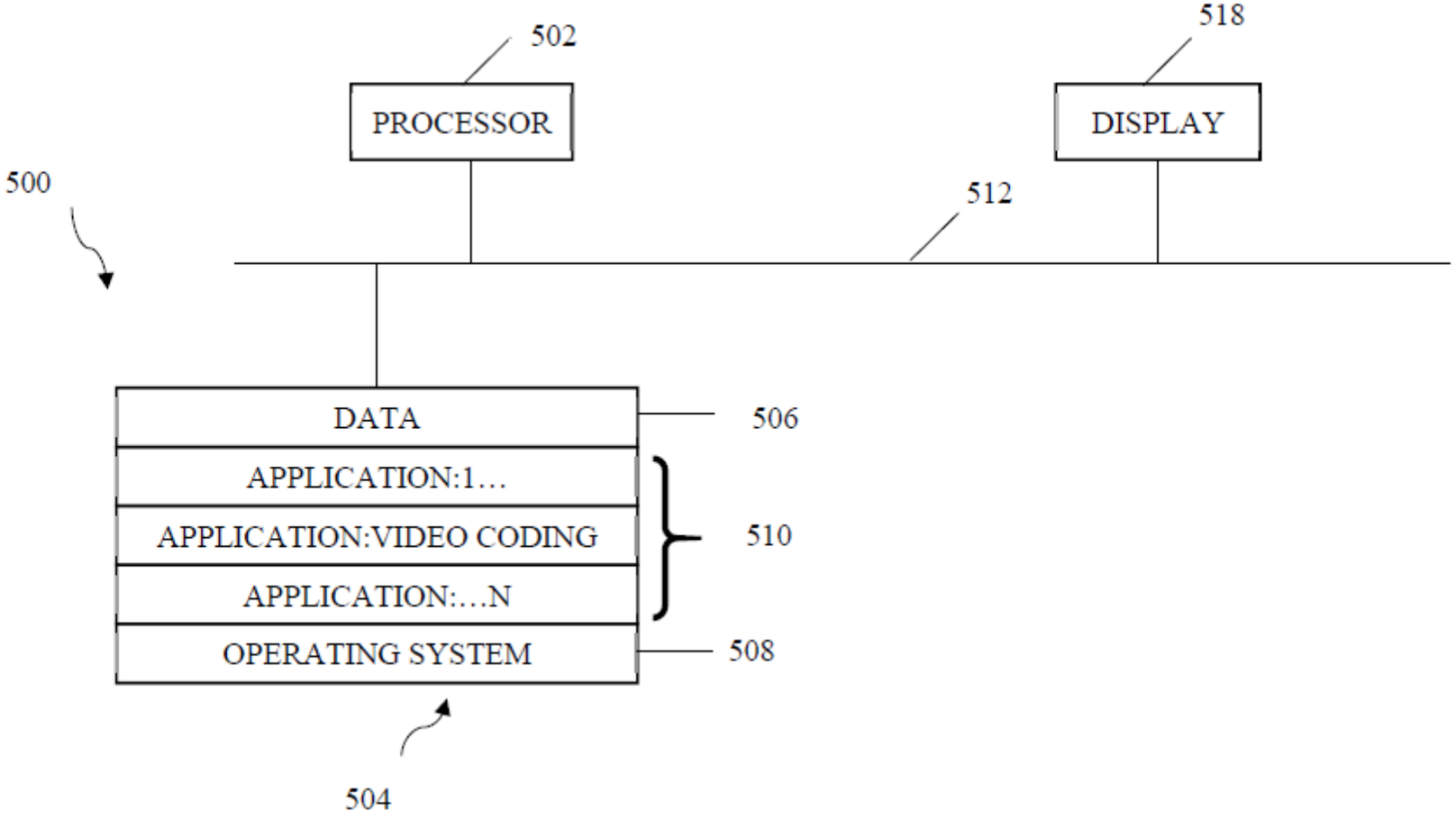
502
518
PROCESSOR
DISPLAY
500
512
DATA
506
APPLICATION:1…
APPLICATION:VIDEO CODING
510
APPLICATION:…N
OPERATING SYSTEM
508
504

Fig.5

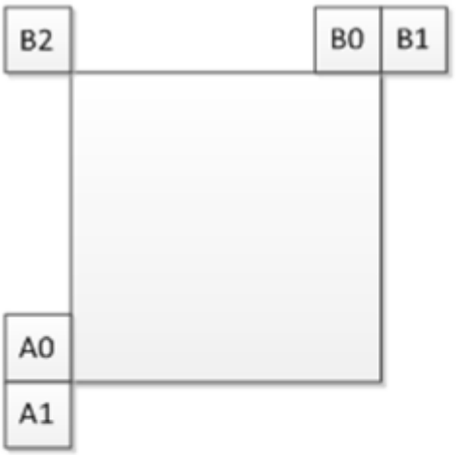

Fig. 6

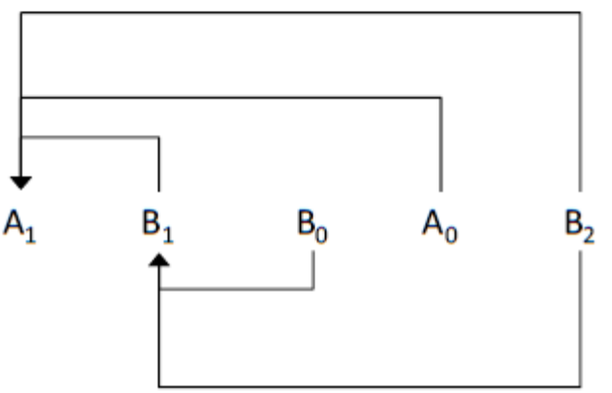

Fig. 7

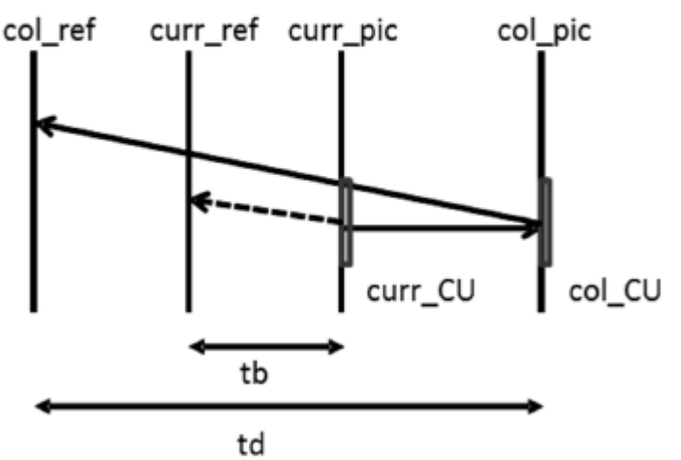

Fig. 8

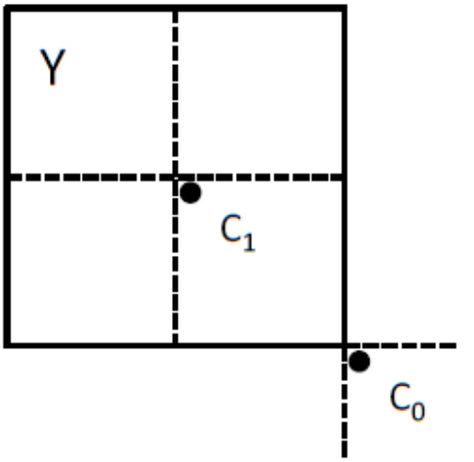

Fig. 9

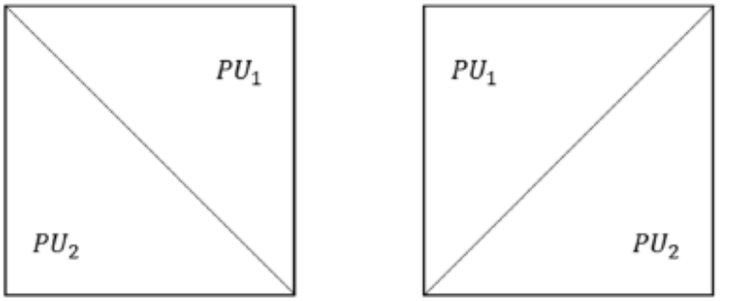

Fig. 10A

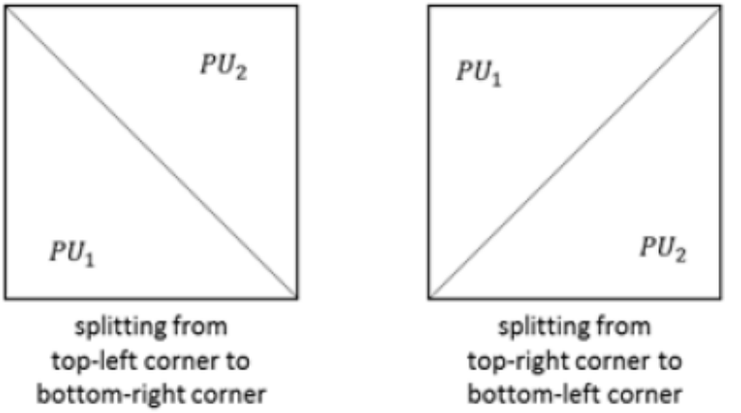

Fig. 10B

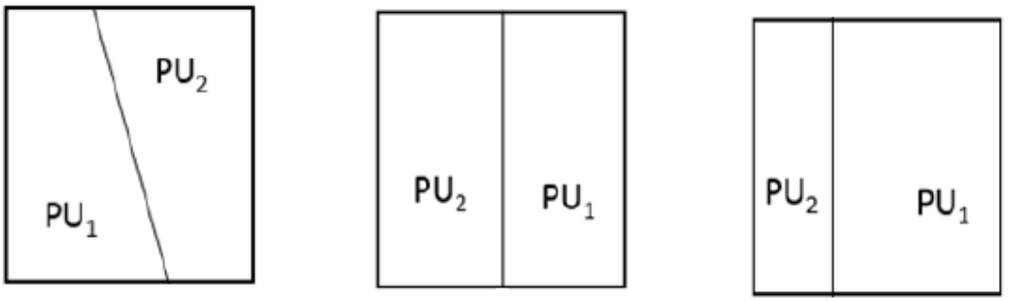

Fig. 11

Merge Index	L0 MV	L1 MV
0	x	
1		x
2	x	
3		x
4	x	

Fig. 12

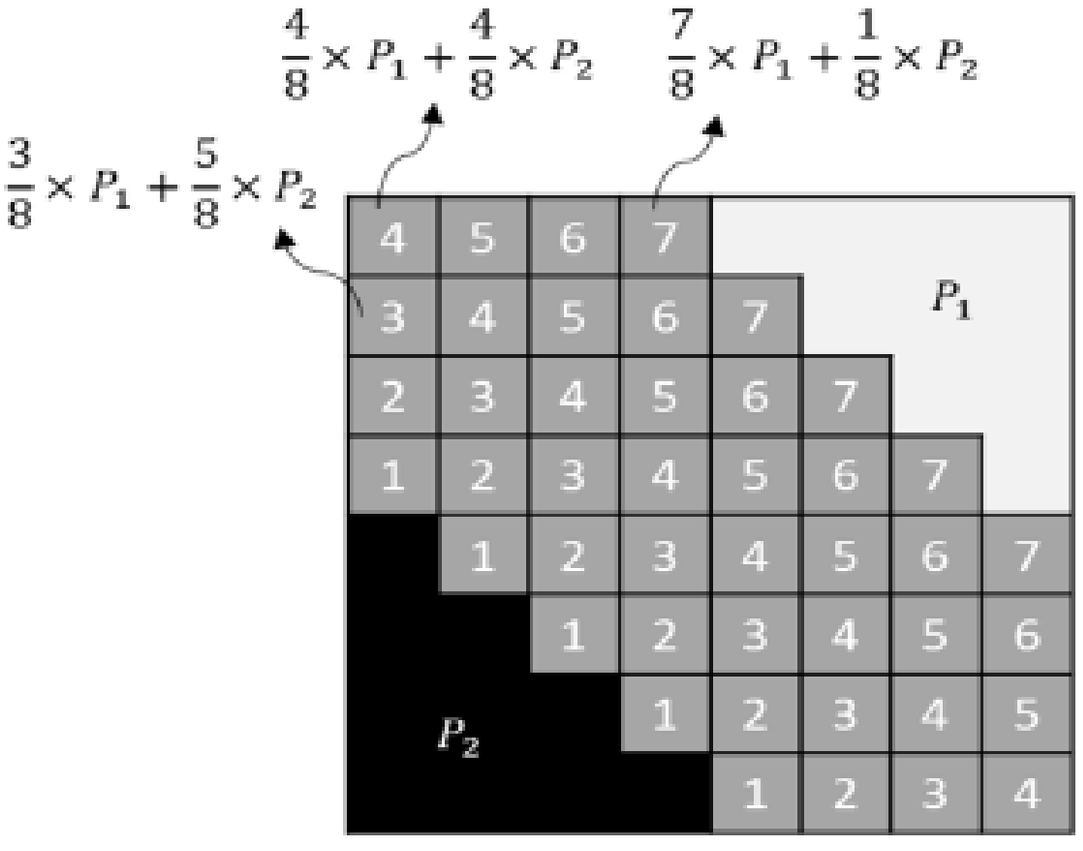

Weight map for luma

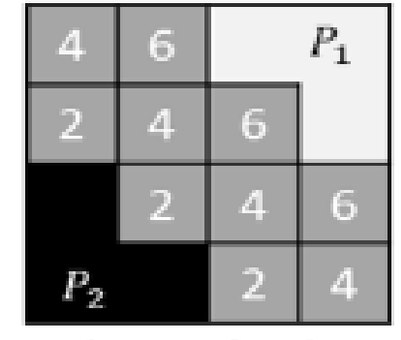

Weight map for chroma

Fig. 13

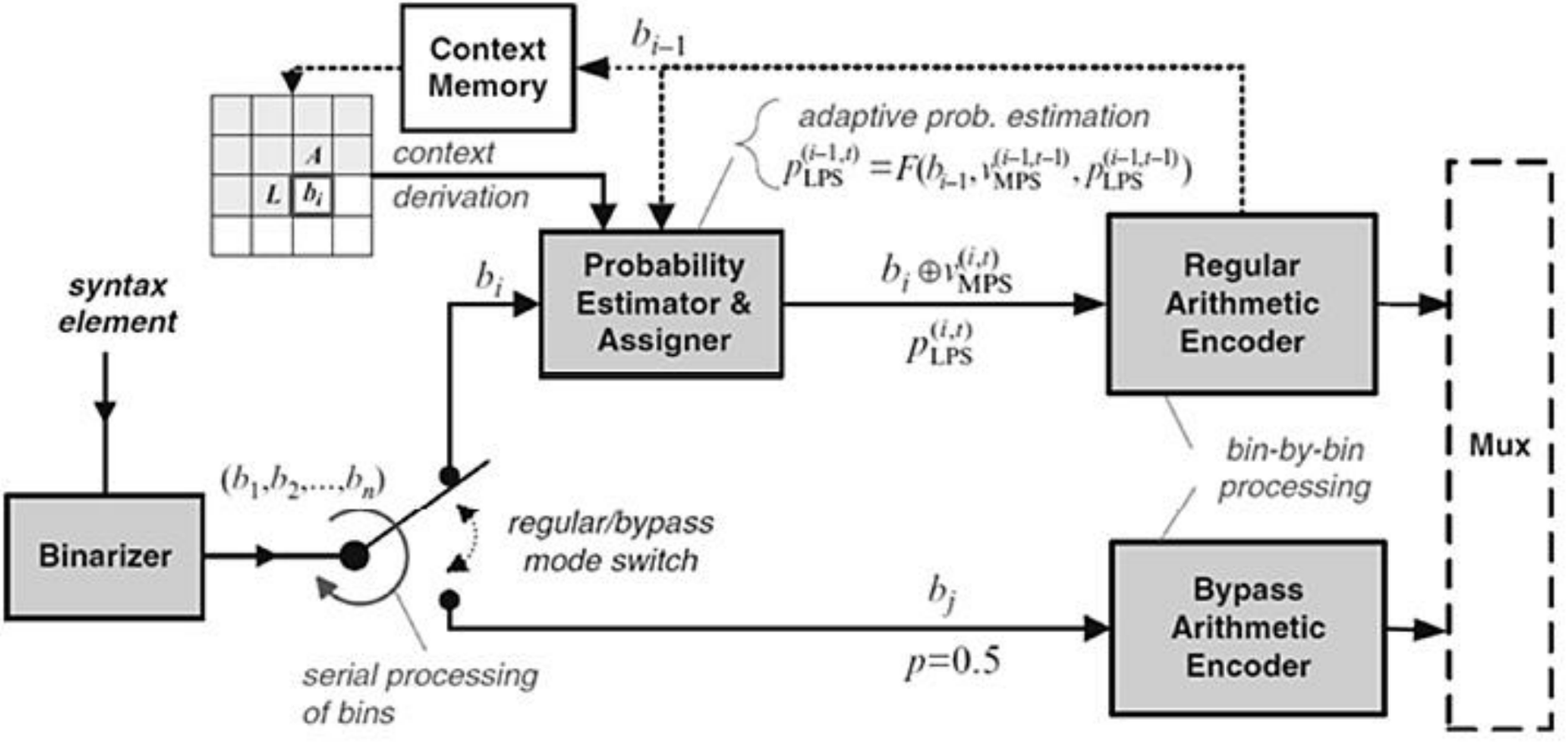
Context Memory
b_{i-1}
adaptive prob. estimation
$p_{\mathrm{LPS}}^{(i-1,t)} = F(b_{i-1}, v_{\mathrm{MPS}}^{(i-1,t-1)}, p_{\mathrm{LPS}}^{(i-1,t-1)})$
A
L
b_i
context derivation
syntax element
b_i
Probability Estimator & Assigner
$b_i \oplus v_{\mathrm{MPS}}^{(i,t)}$
$p_{\mathrm{LPS}}^{(i,t)}$
Regular Arithmetic Encoder
Mux
bin-by-bin processing
$(b_1, b_2, \ldots, b_n)$
Binarizer
regular/bypass mode switch
b_j
$p=0.5$
Bypass Arithmetic Encoder
serial processing of bins

Fig. 14

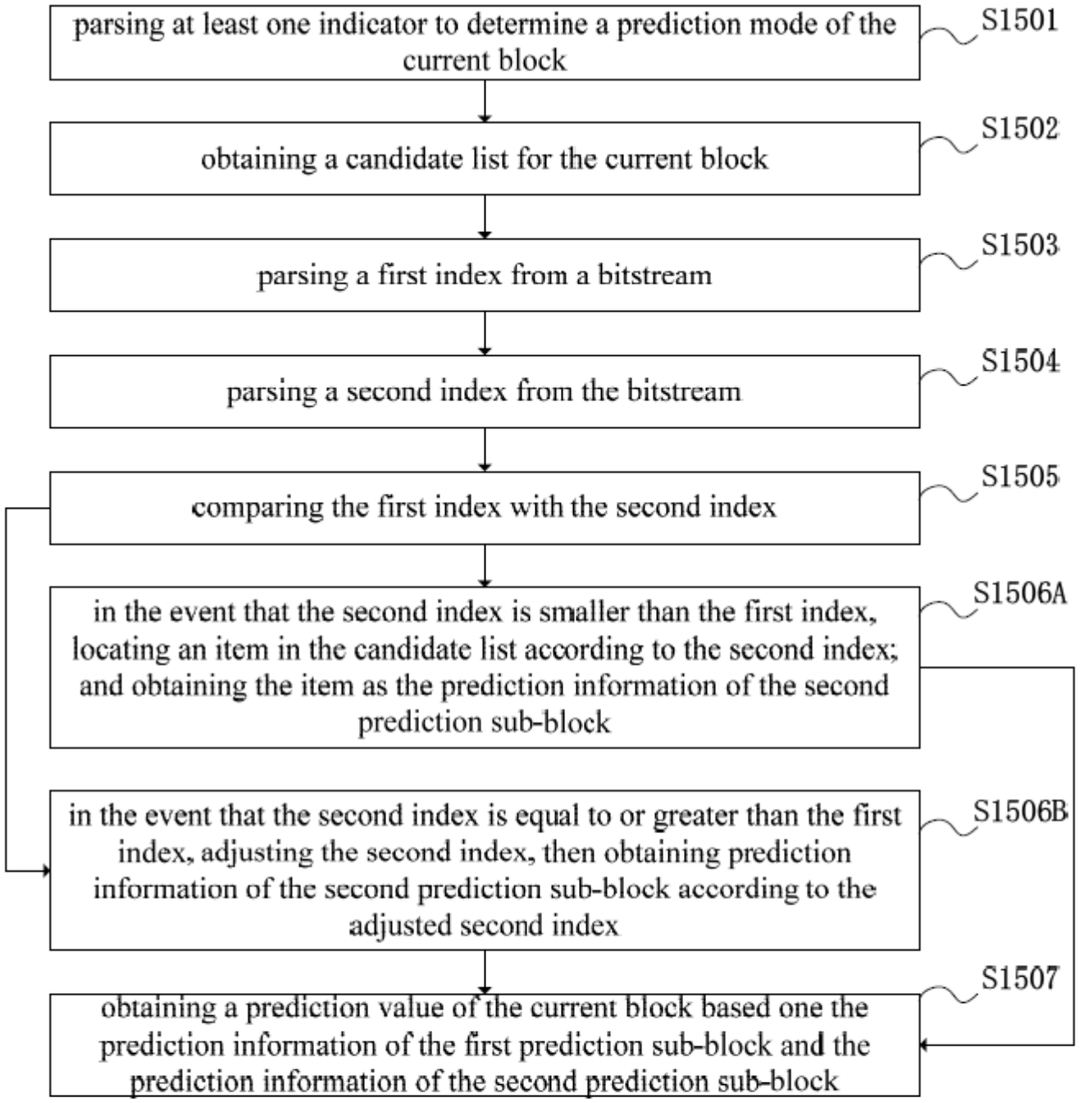
parsing at least one indicator to determine a prediction mode of the current block
S1501
obtaining a candidate list for the current block
S1502
parsing a first index from a bitstream
S1503
parsing a second index from the bitstream
S1504
comparing the first index with the second index
S1505
in the event that the second index is smaller than the first index, locating an item in the candidate list according to the second index; and obtaining the item as the prediction information of the second prediction sub-block
S1506A
in the event that the second index is equal to or greater than the first index, adjusting the second index, then obtaining prediction information of the second prediction sub-block according to the adjusted second index
S1506B
obtaining a prediction value of the current block based one the prediction information of the first prediction sub-block and the prediction information of the second prediction sub-block
S1507

Fig. 15

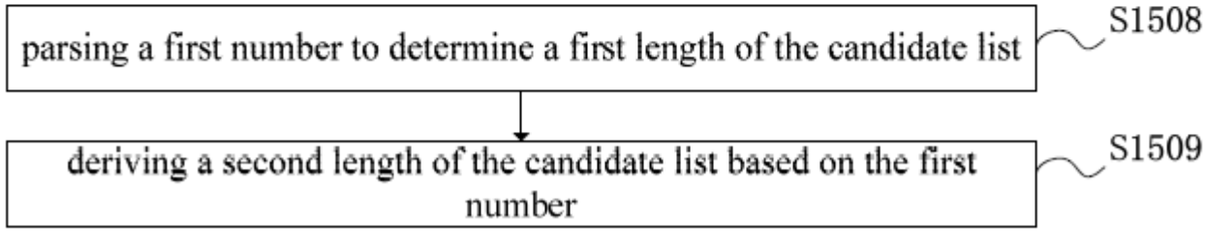
parsing a first number to determine a first length of the candidate list
S1508
deriving a second length of the candidate list based on the first number
S1509

Fig. 16

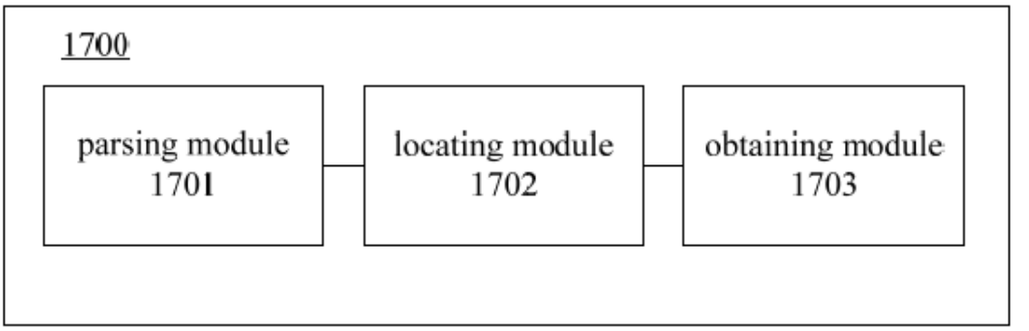

Fig. 17

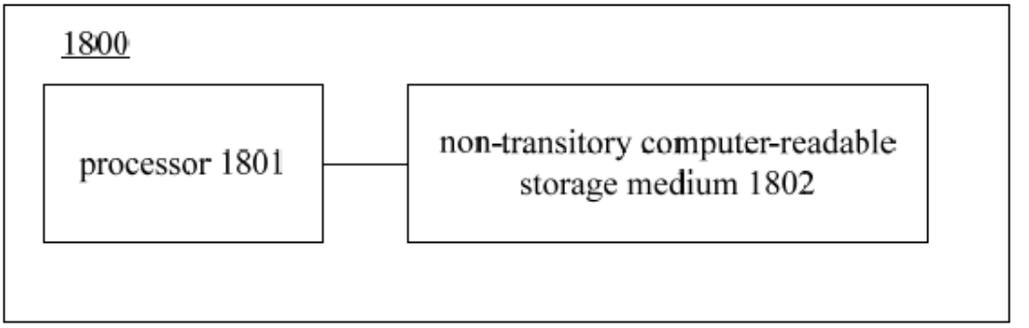

Fig. 18

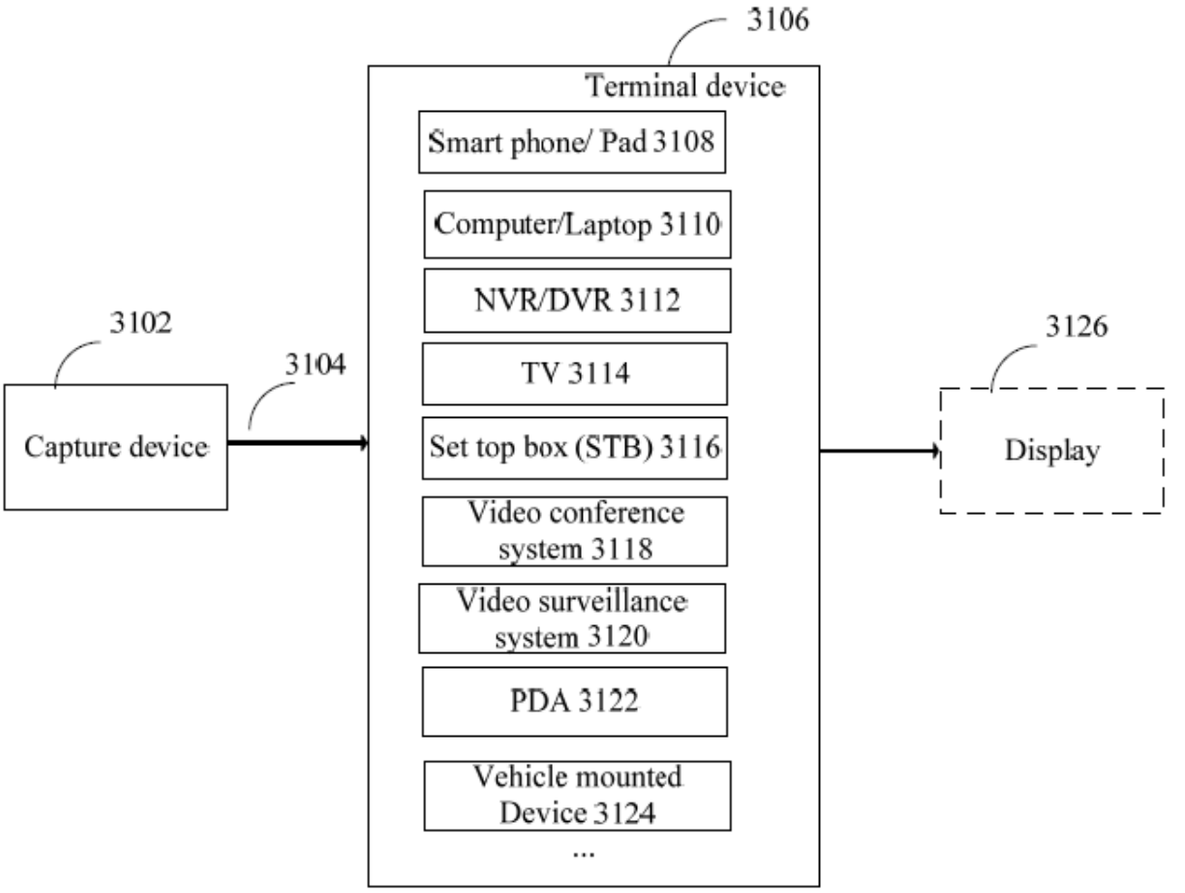

Fig. 19

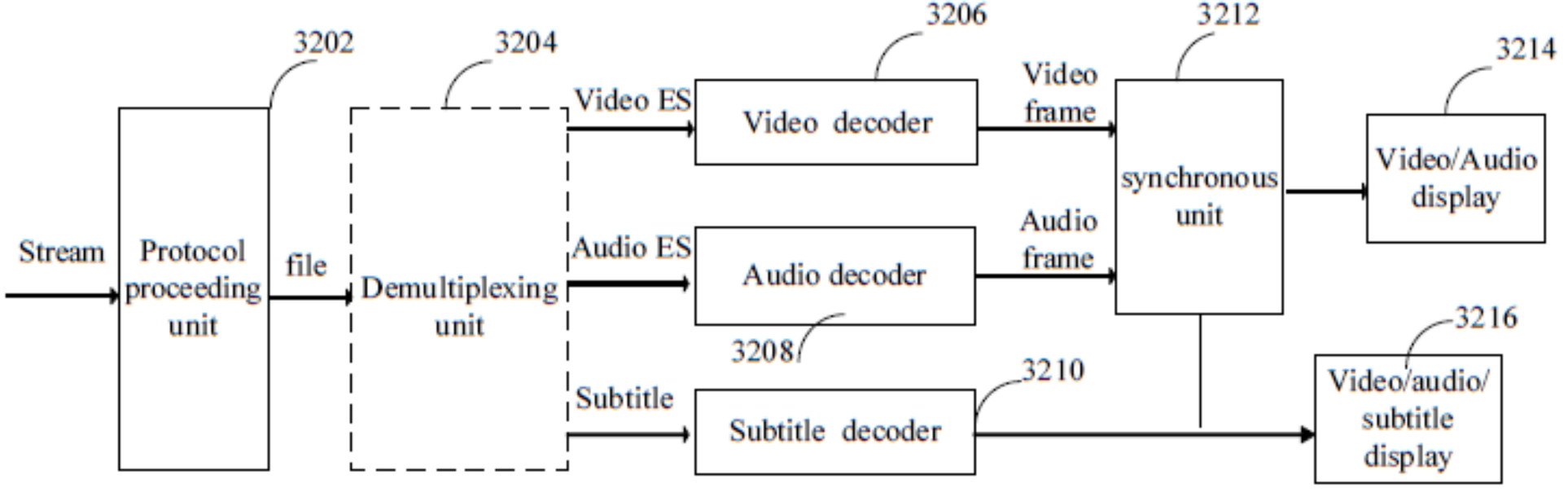
3202
3204
3206
3212
3214
Stream
Protocol proceeding unit
file
Demultiplexing unit
Video ES
Audio ES
Subtitle
Video decoder
Audio decoder
Subtitle decoder
3208
3210
Video frame
Audio frame
synchronous unit
Video/Audio display
3216
Video/audio/ subtitle display

Fig. 20