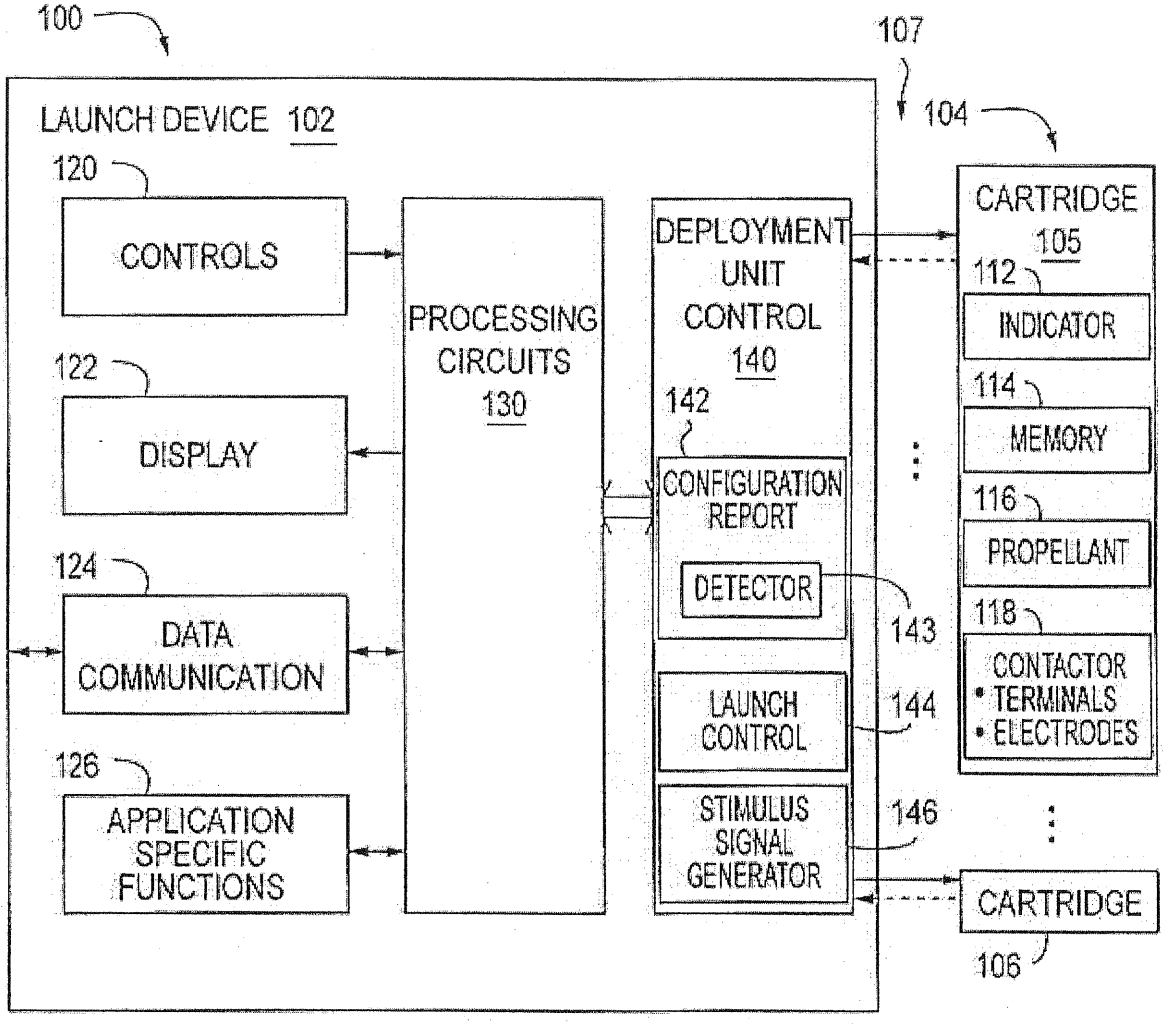
100
107
LAUNCH DEVICE 102
104
120
CONTROLS
122
DISPLAY
124
DATA COMMUNICATION
126
APPLICATION SPECIFIC FUNCTIONS
PROCESSING CIRCUITS 130
DEPLOYMENT UNIT CONTROL 140
142
CONFIGURATION REPORT
DETECTOR
143
LAUNCH CONTROL
144
STIMULUS SIGNAL GENERATOR
146
CARTRIDGE 105
112
INDICATOR
114
MEMORY
116
PROPELLANT
118
CONTACTOR
• TERMINALS
• ELECTRODES
CARTRIDGE
106

FIG. 1

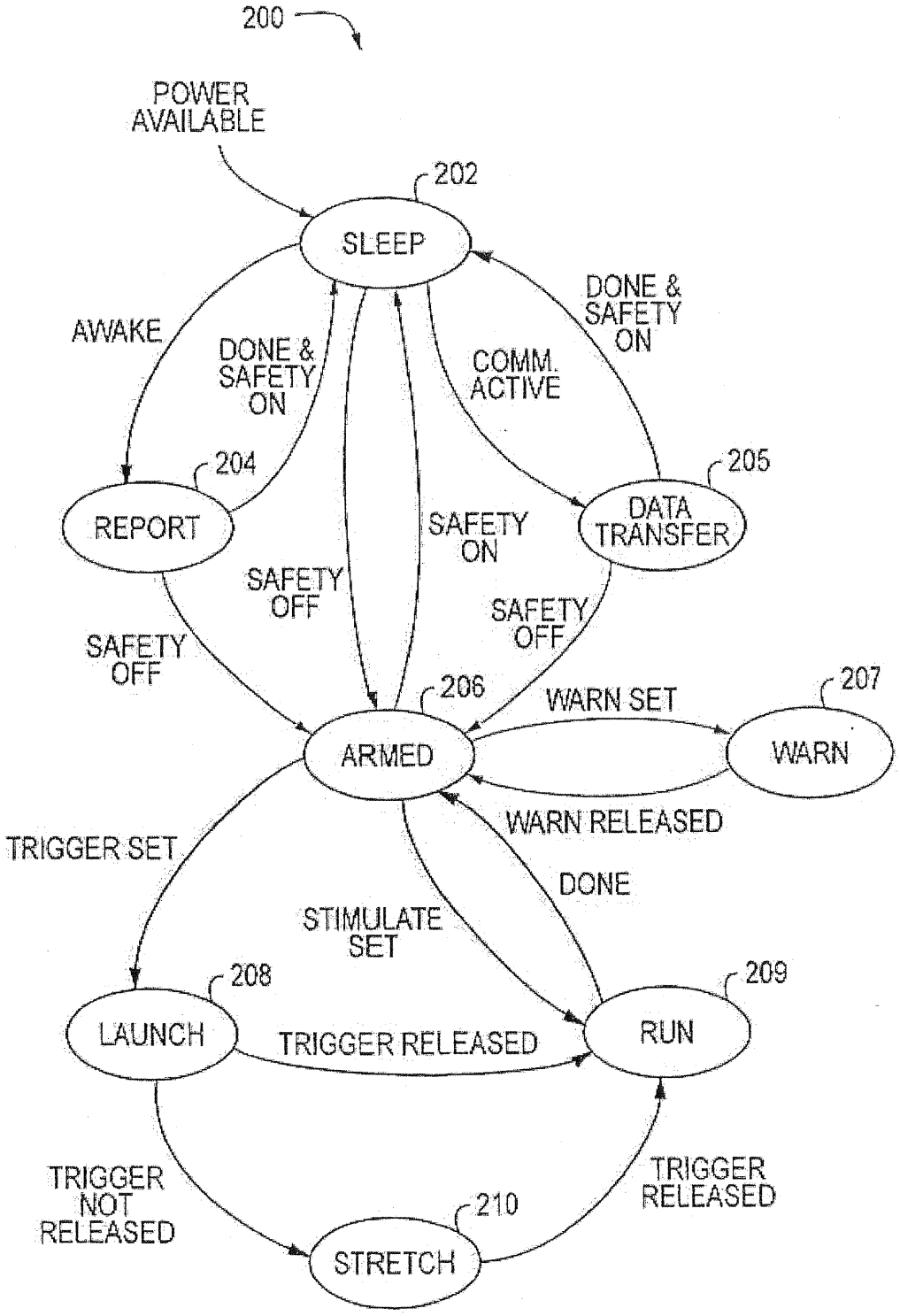
200
POWER AVAILABLE
202
SLEEP
AWAKE
DONE & SAFETY ON
COMM. ACTIVE
DONE & SAFETY ON
204
205
REPORT
DATA TRANSFER
SAFETY ON
SAFETY OFF
SAFETY OFF
SAFETY OFF
206
207
WARN SET
ARMED
WARN
WARN RELEASED
TRIGGER SET
DONE
STIMULATE SET
208
209
LAUNCH
TRIGGER RELEASED
RUN
TRIGGER NOT RELEASED
TRIGGER RELEASED
210
STRETCH

FIG. 2A

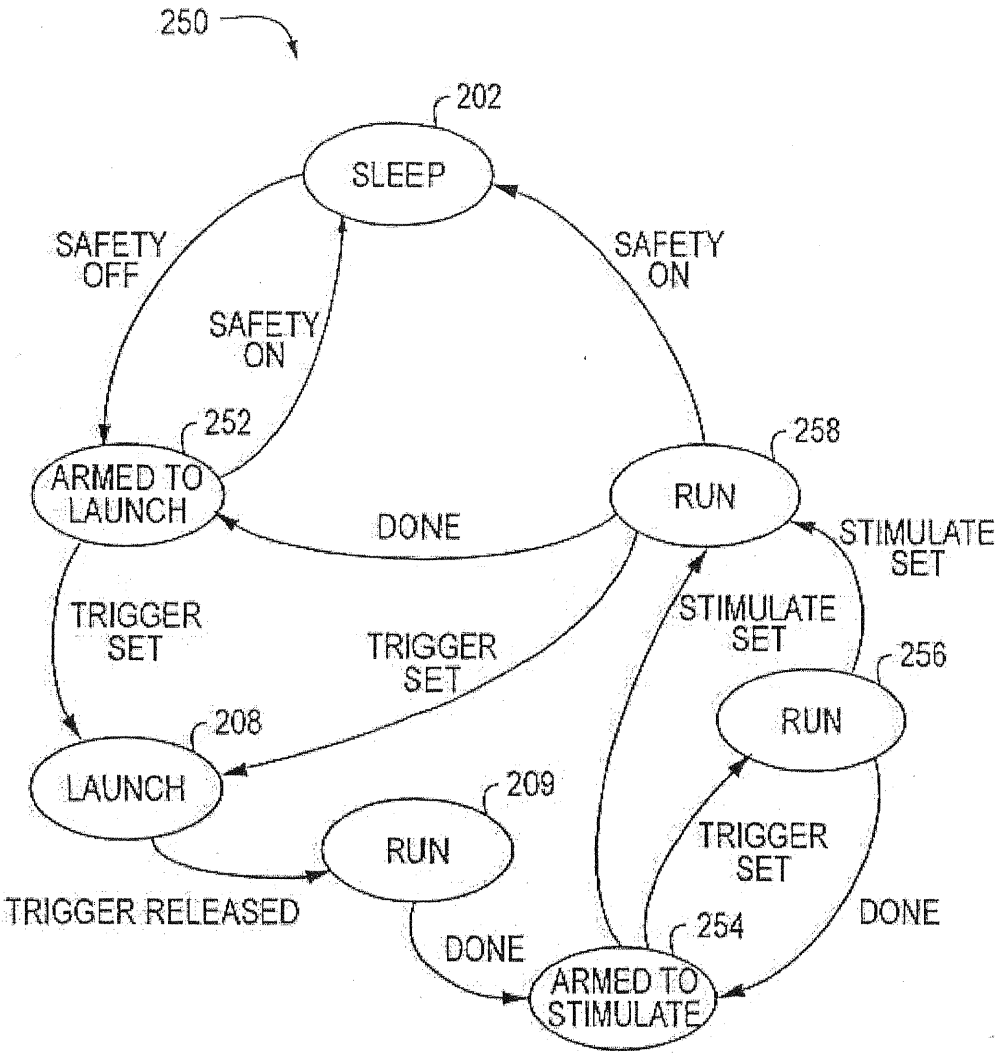
250
202
SLEEP
SAFETY OFF
SAFETY ON
SAFETY ON
252
ARMED TO LAUNCH
258
RUN
DONE
STIMULATE SET
TRIGGER SET
TRIGGER SET
STIMULATE SET
256
RUN
208
LAUNCH
209
RUN
TRIGGER SET
TRIGGER RELEASED
DONE
254
DONE
ARMED TO STIMULATE

FIG. 2B

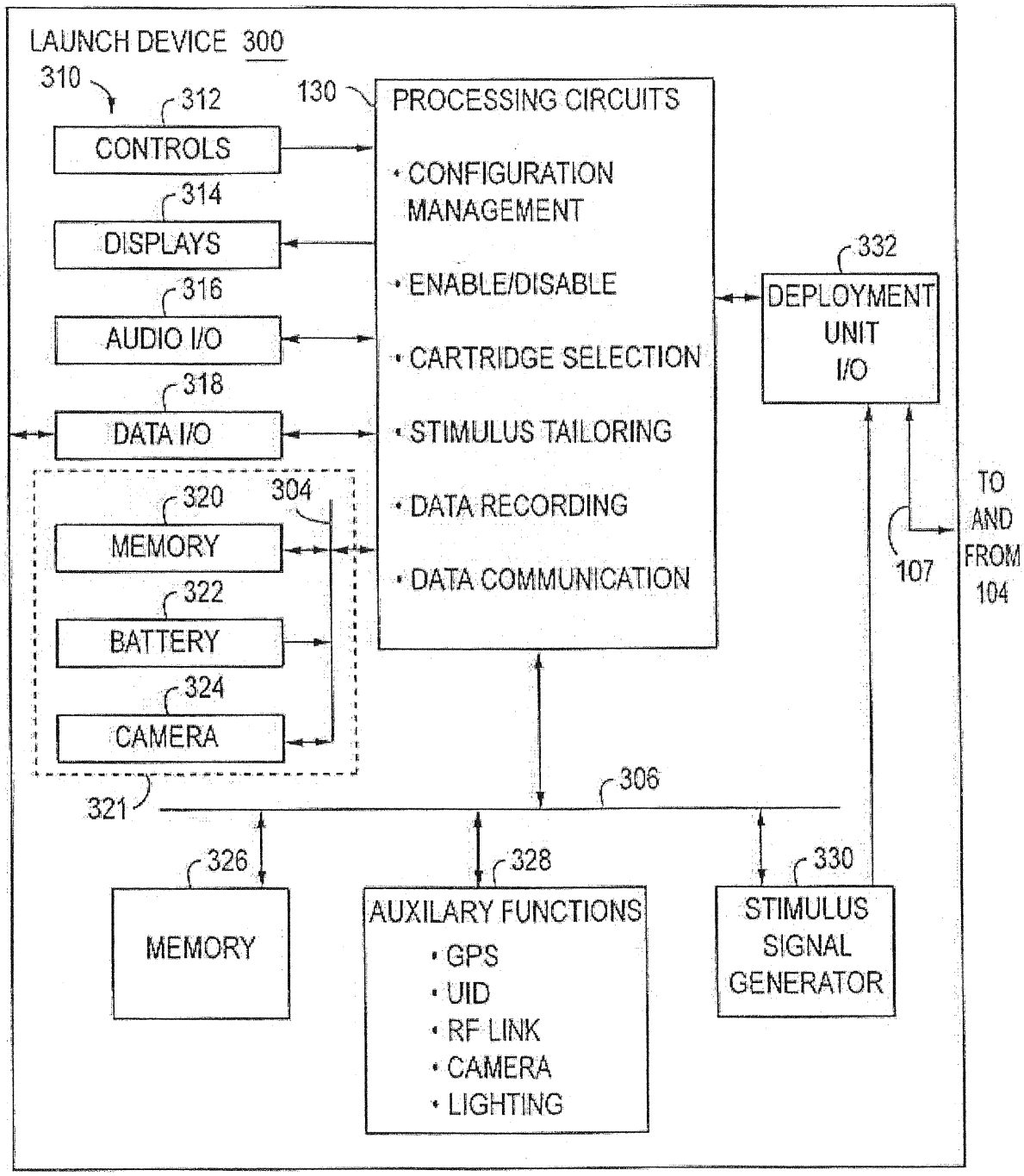
LAUNCH DEVICE 300
310
312
CONTROLS
314
DISPLAYS
316
AUDIO I/O
318
DATA I/O
320
MEMORY
322
BATTERY
324
CAMERA
304
130
PROCESSING CIRCUITS
• CONFIGURATION MANAGEMENT
• ENABLE/DISABLE
• CARTRIDGE SELECTION
• STIMULUS TAILORING
• DATA RECORDING
• DATA COMMUNICATION
332
DEPLOYMENT UNIT I/O
TO AND FROM 104
107
321
306
326
MEMORY
328
AUXILARY FUNCTIONS
• GPS
• UID
• RF LINK
• CAMERA
• LIGHTING
330
STIMULUS SIGNAL GENERATOR

FIG. 3

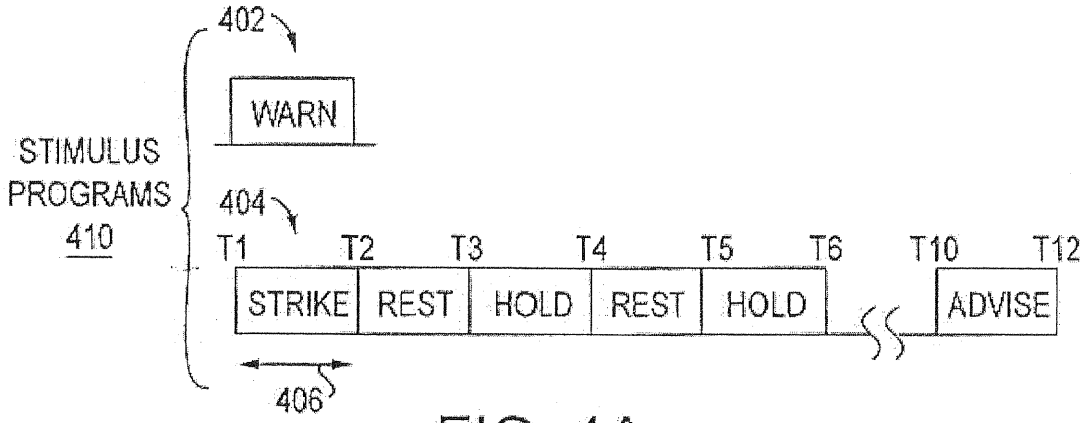

FIG. 4A

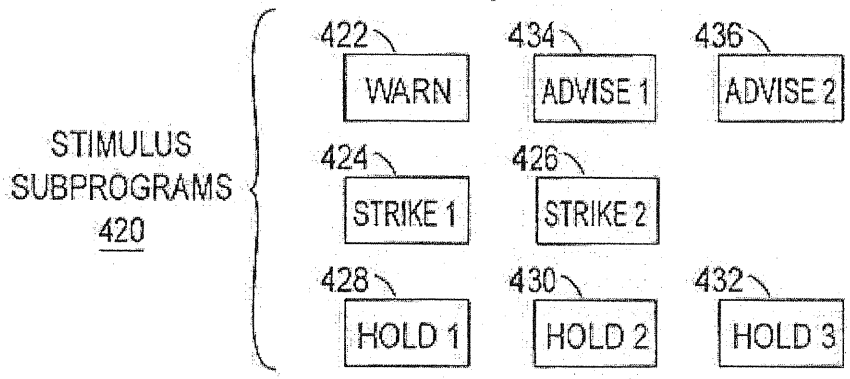

FIG. 4B

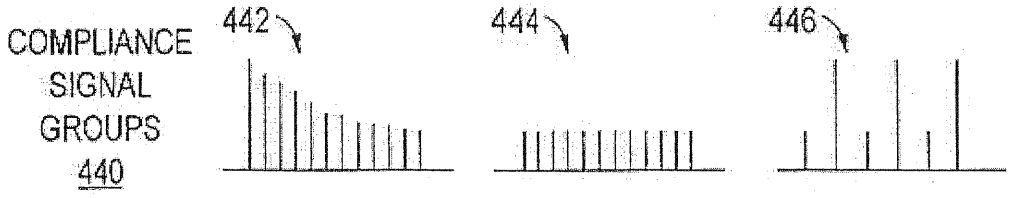

FIG. 4C

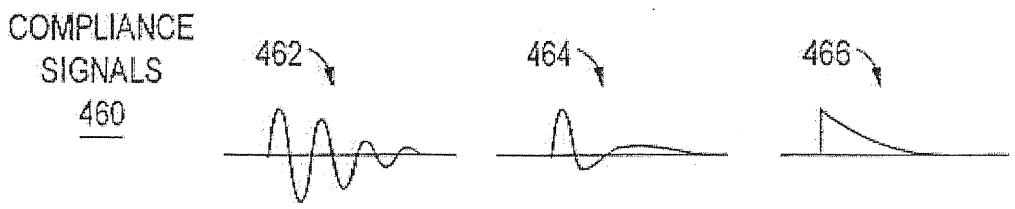

FIG. 4D

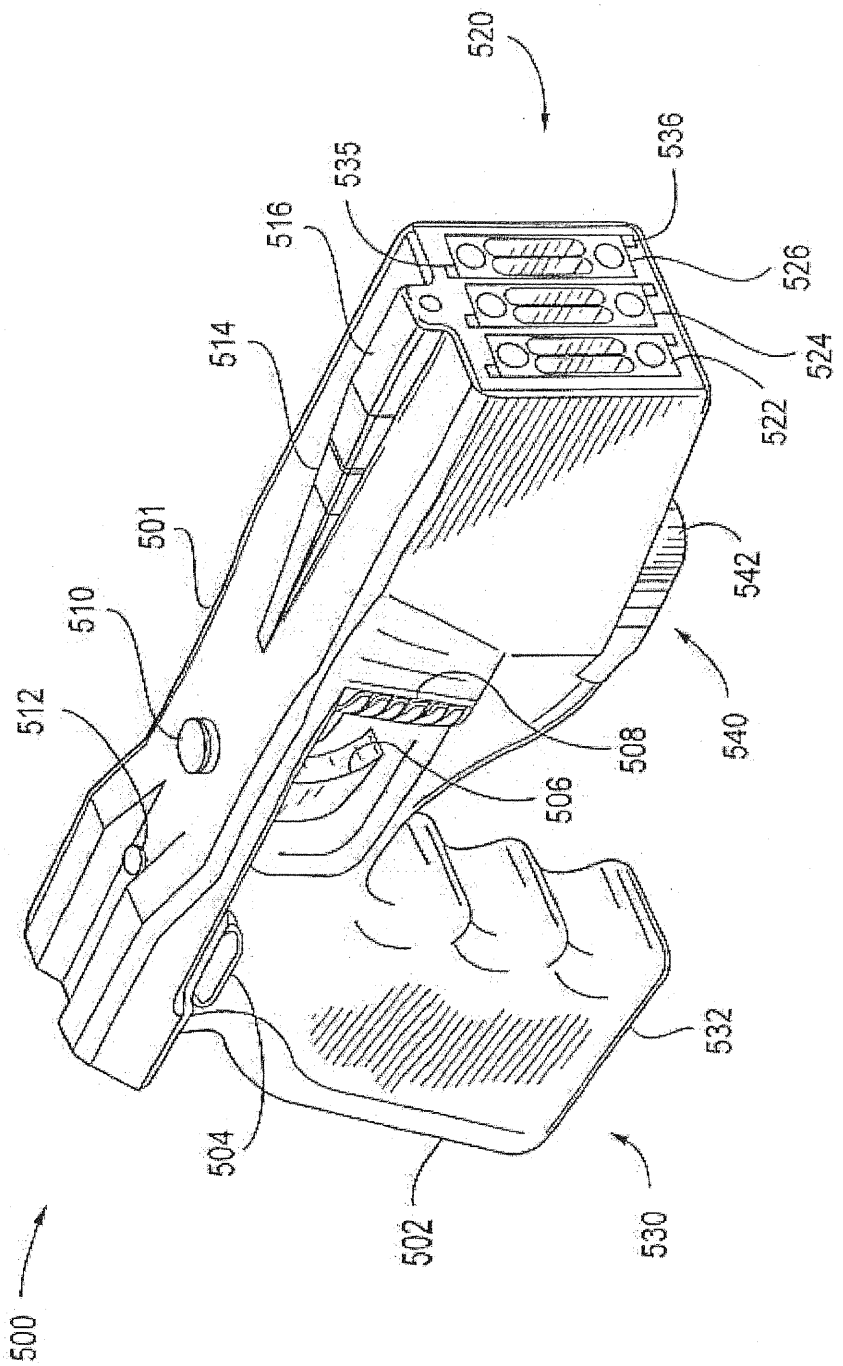
520
536
535
516
526
514
524
522
501
542
510
512
540
508
506
504
532
502
530
500

FIG. 5

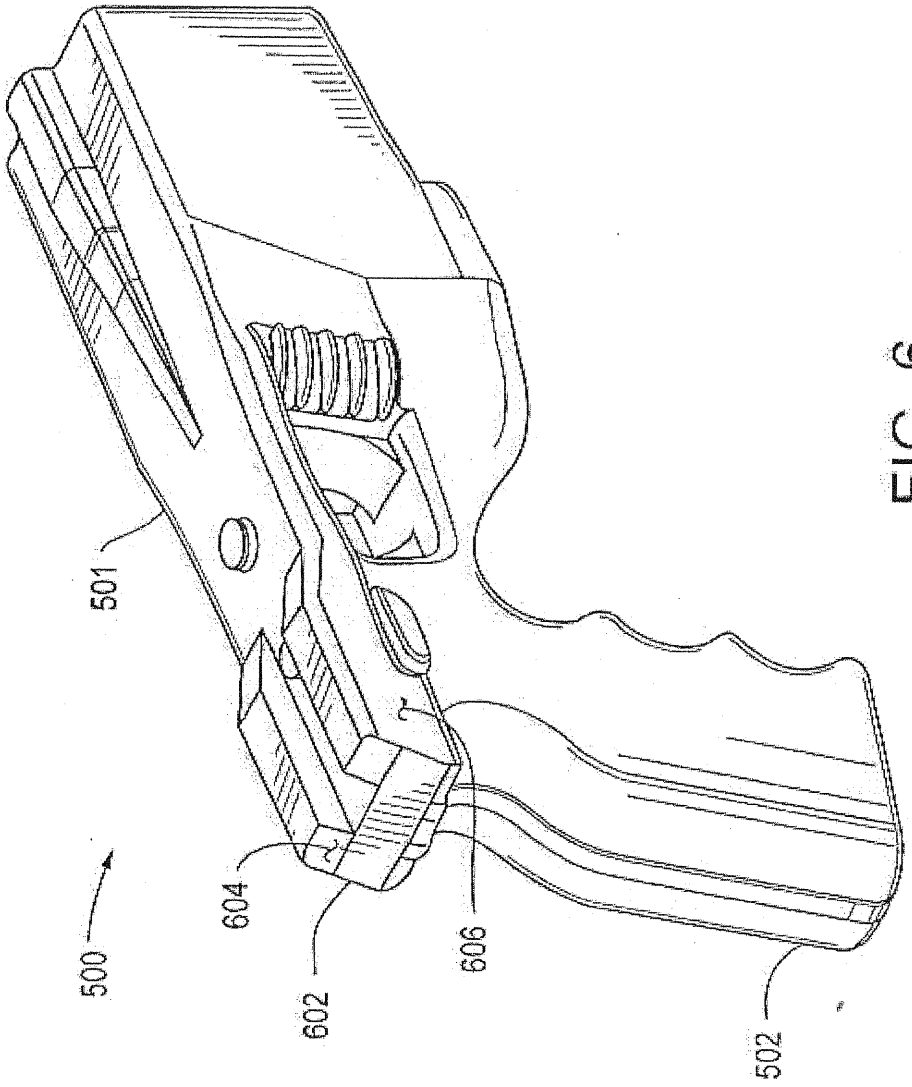

FIG. 6

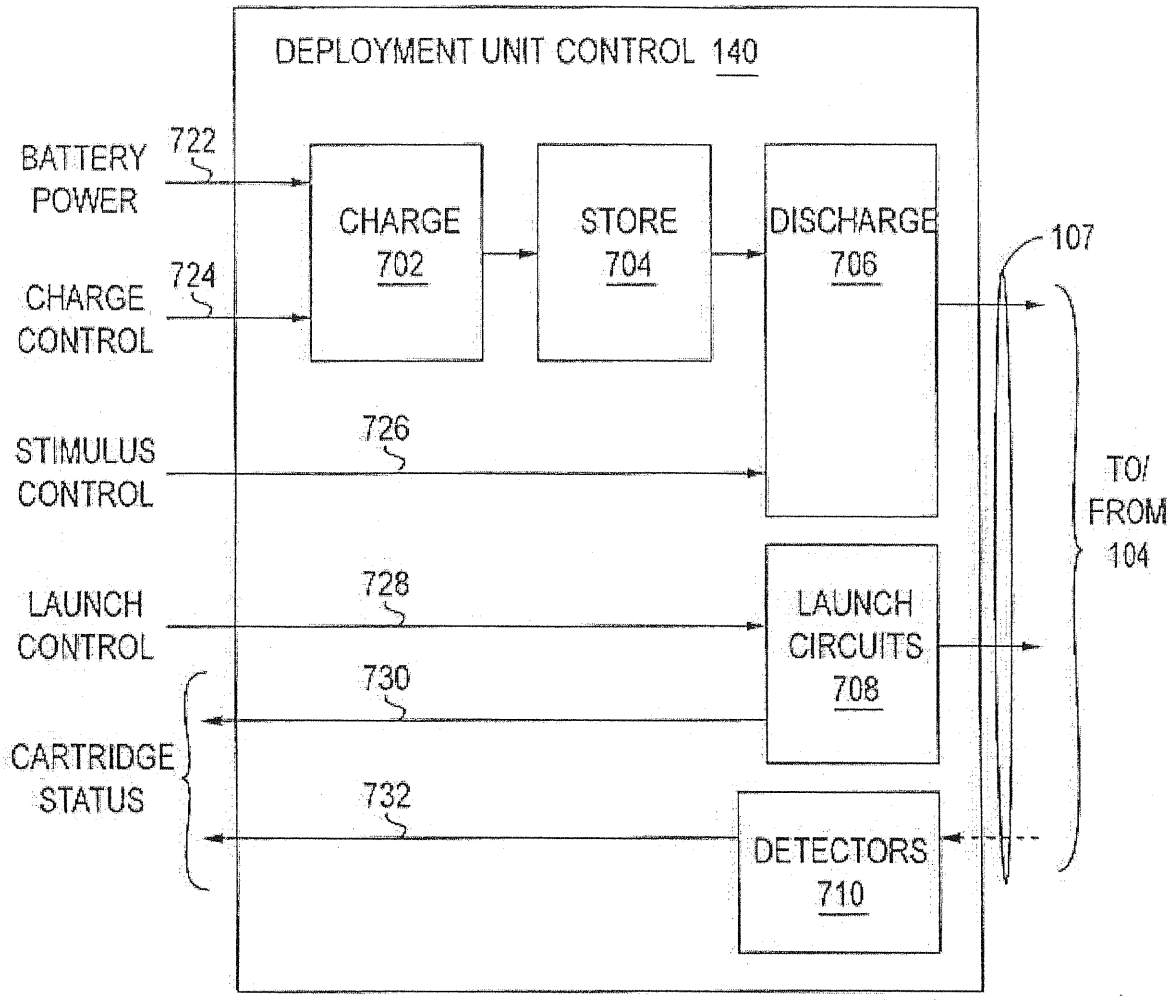
DEPLOYMENT UNIT CONTROL 140
BATTERY POWER
722
CHARGE CONTROL
724
CHARGE 702
STORE 704
DISCHARGE 706
107
STIMULUS CONTROL
726
TO/ FROM 104
LAUNCH CONTROL
728
LAUNCH CIRCUITS 708
730
CARTRIDGE STATUS
732
DETECTORS 710

FIG. 7

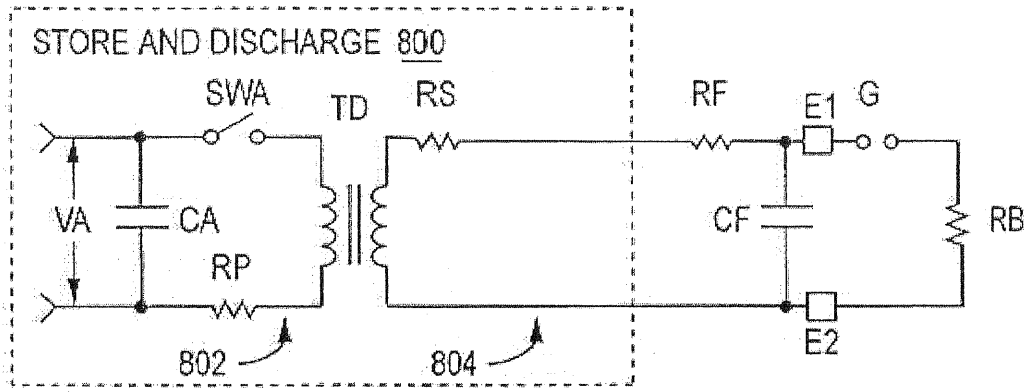
STORE AND DISCHARGE 800
SWA
TD
RS
RF
E1
G
VA
CA
RP
CF
RB
802
804
E2

FIG. 8A

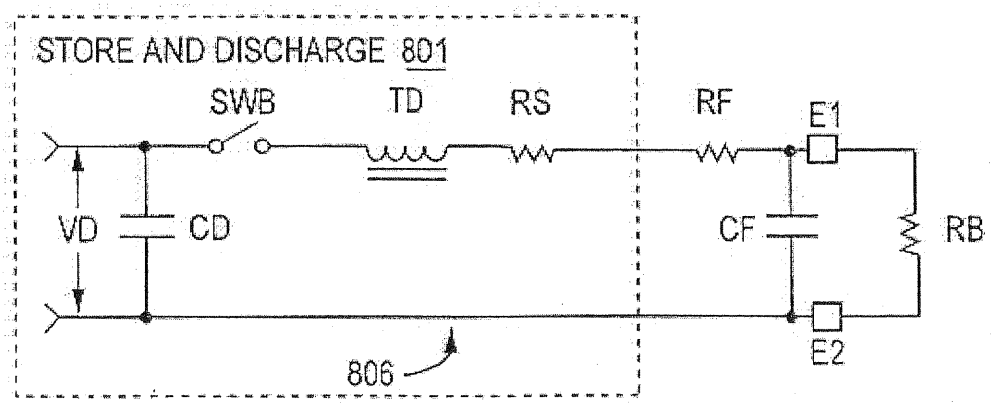
STORE AND DISCHARGE 801
SWB
TD
RS
RF
E1
VD
CD
CF
RB
806
E2

FIG. 8B

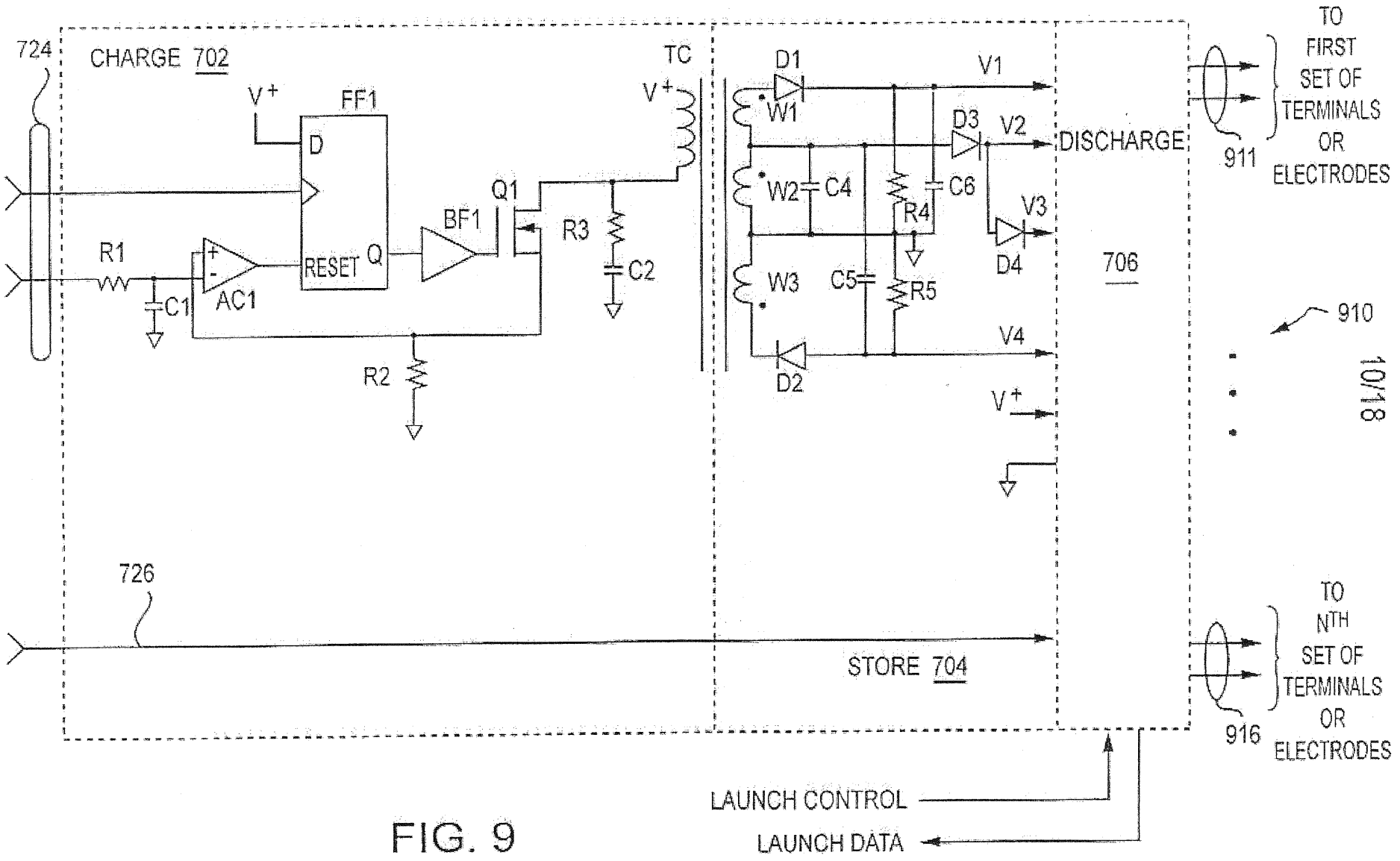
724
CHARGE 702
V+
FF1
D
RESET
Q
R1
C1
AC1
BF1
Q1
R3
C2
R2
TC
V+
D1
W1
V1
D3
V2
W2
C4
R4
C6
V3
D4
W3
C5
R5
V4
D2
V+
DISCHARGE
706
911
TO FIRST SET OF TERMINALS OR ELECTRODES
910
726
STORE 704
916
TO NTH SET OF TERMINALS OR ELECTRODES
LAUNCH CONTROL
LAUNCH DATA

FIG. 9

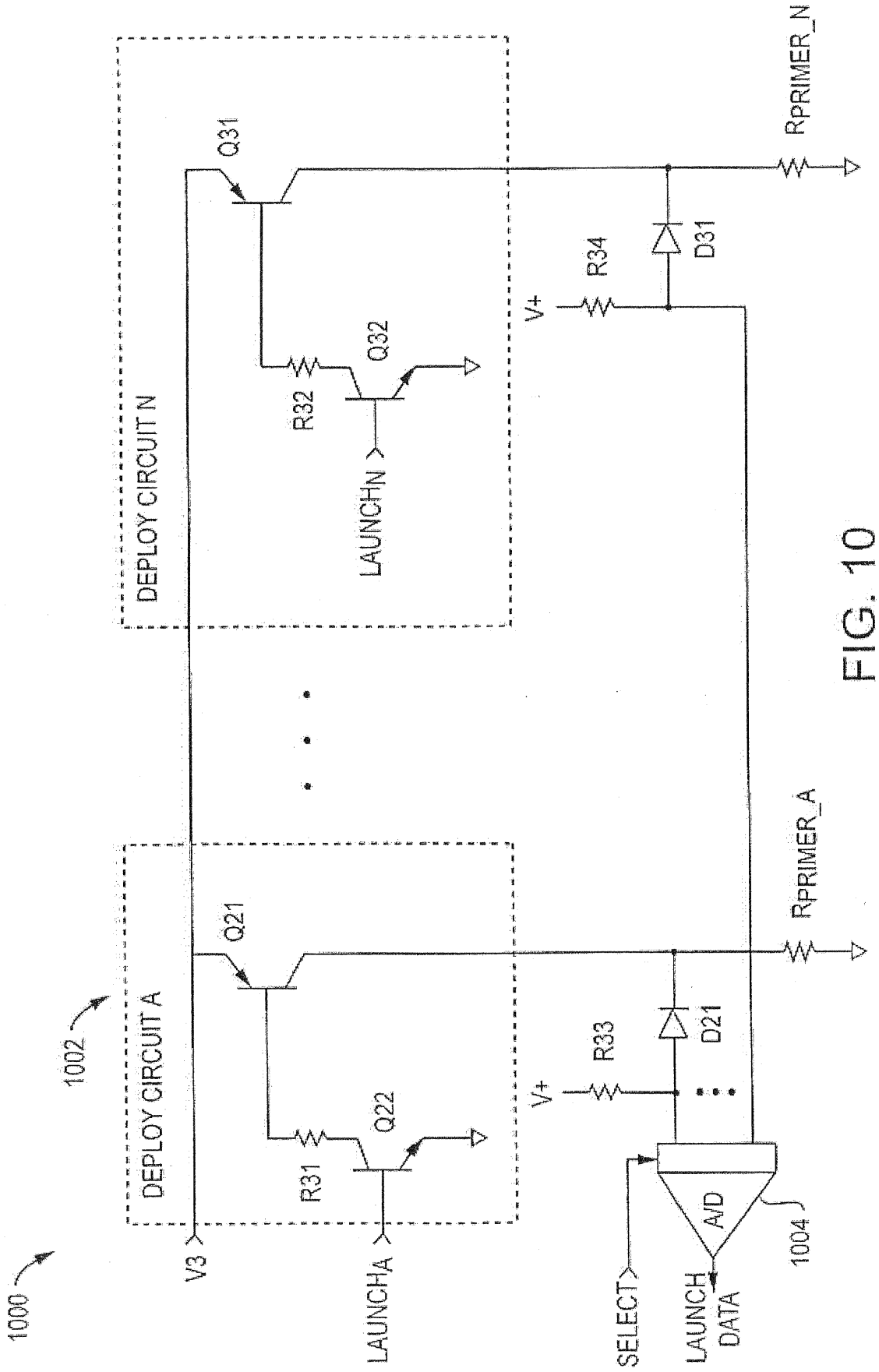
1000
1002
DEPLOY CIRCUIT A
DEPLOY CIRCUIT N
Q21
Q22
Q31
Q32
R31
R32
R33
R34
D21
D31
V3
V+
V+
LAUNCHA
LAUNCHN
RPRIMER_A
RPRIMER_N
SELECT
LAUNCH DATA
A/D
1004

FIG. 10

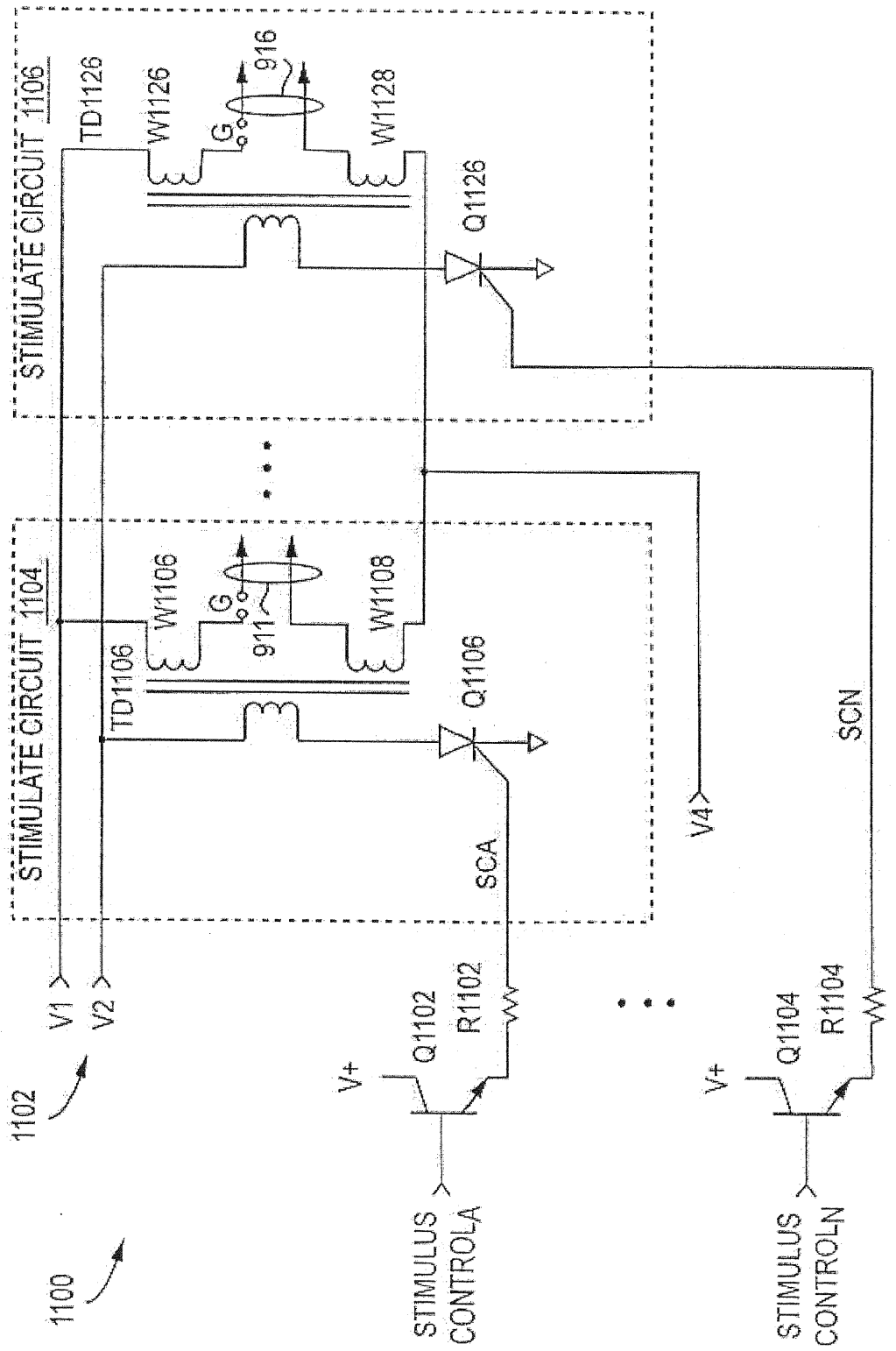
1100
1102
V1
V2
STIMULATE CIRCUIT 1106
STIMULATE CIRCUIT 1104
TD1126
W1126
G
916
W1128
Q1126
W1106
911
W1108
TD1106
Q1106
SCA
V4
SCN
V+
Q1102
R1102
STIMULUS CONTROLA
V+
Q1104
R1104
STIMULUS CONTROLN

FIG. 11

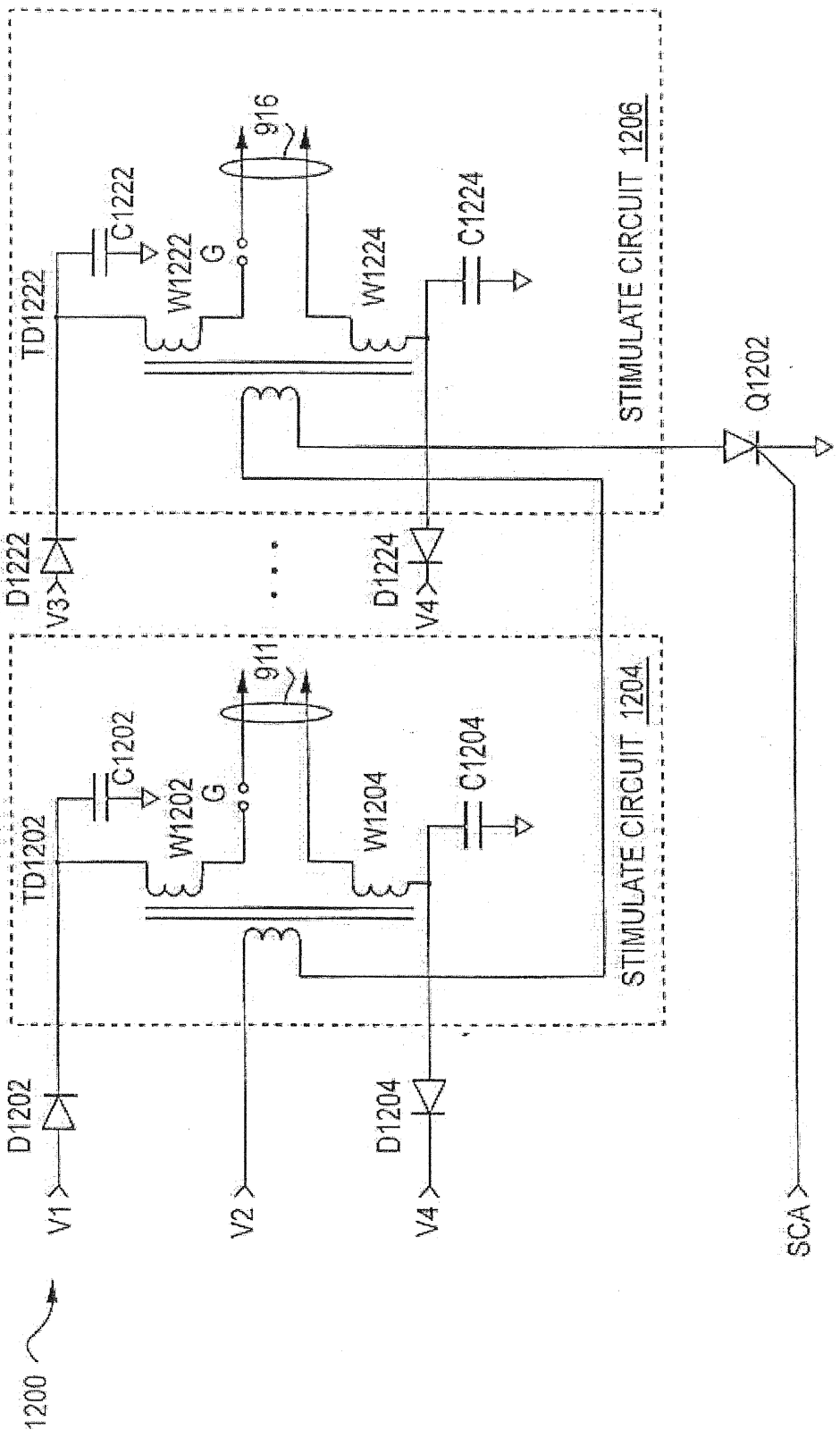
1200
V1
V2
V4
SCA
D1202
D1204
D1222
D1224
V3
V4
TD1202
TD1222
C1202
C1204
C1222
C1224
W1202
W1204
W1222
W1224
G
G
911
916
STIMULATE CIRCUIT 1204
STIMULATE CIRCUIT 1206
Q1202

FIG. 12

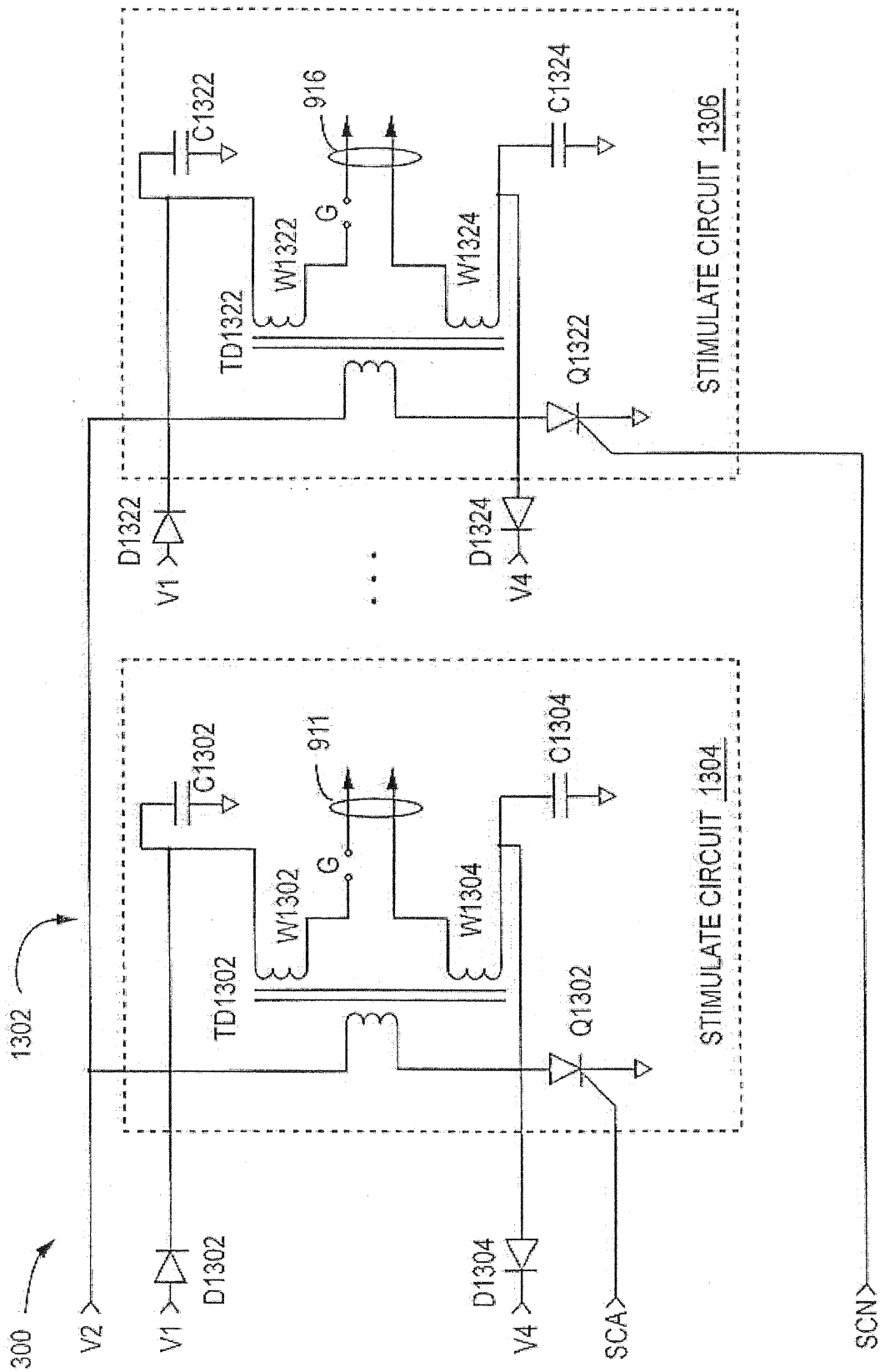
1300
1302
V2
V1
D1302
TD1302
W1302
G
911
C1302
W1304
C1304
Q1302
STIMULATE CIRCUIT 1304
D1304
V4
SCA
SCN
D1322
V1
TD1322
W1322
916
C1322
W1324
C1324
Q1322
STIMULATE CIRCUIT 1306
D1324
V4

FIG. 13

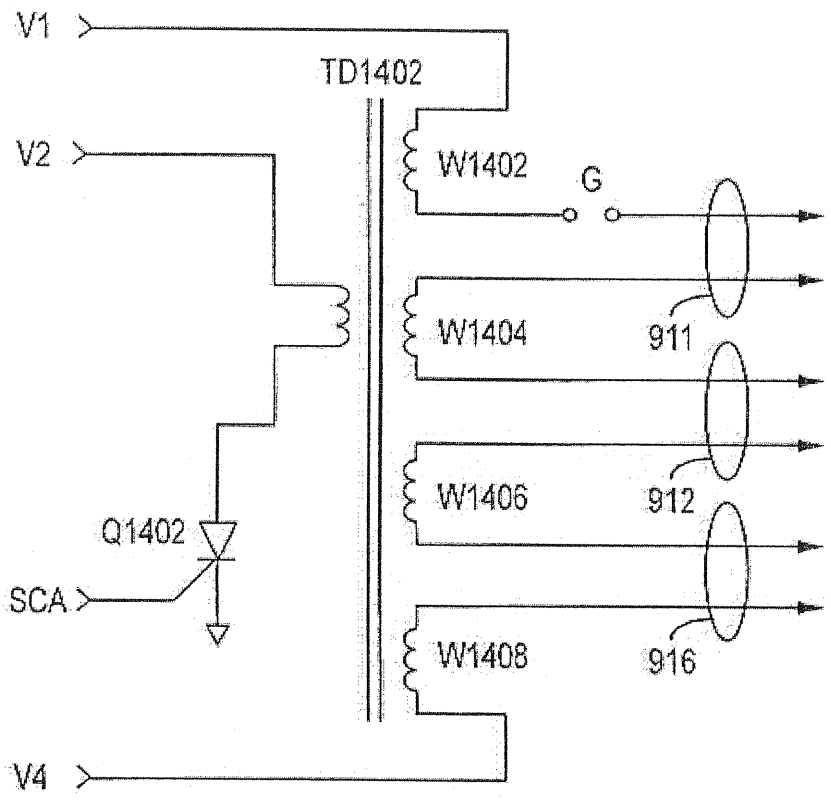
V1
TD1402
V2
W1402
G
W1404
911
W1406
912
Q1402
SCA
W1408
916
V4

FIG. 14

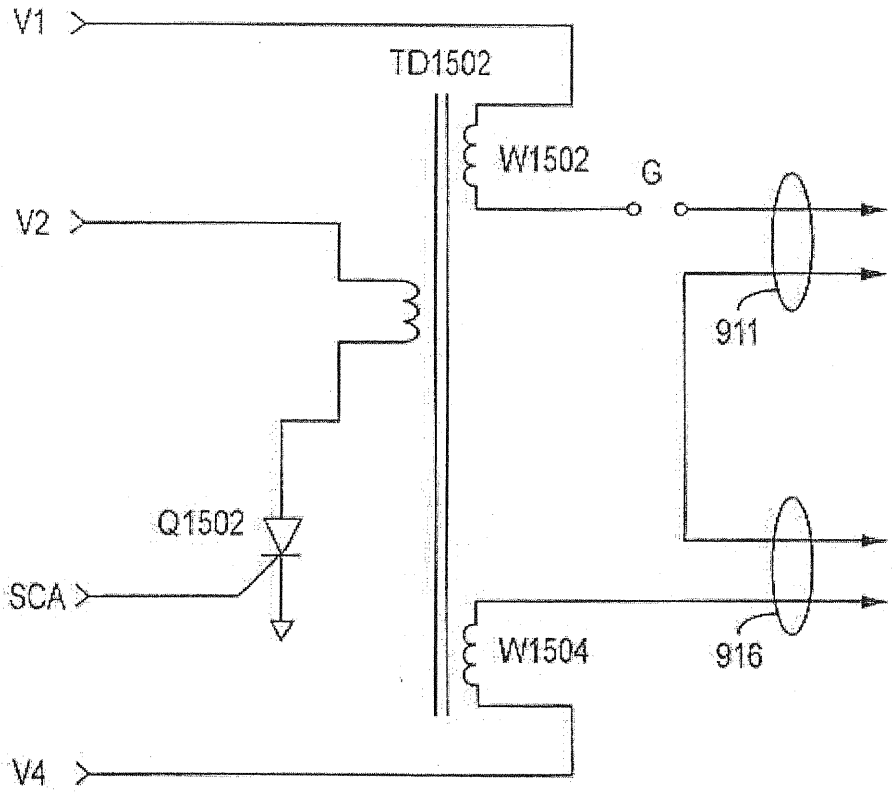

FIG. 15

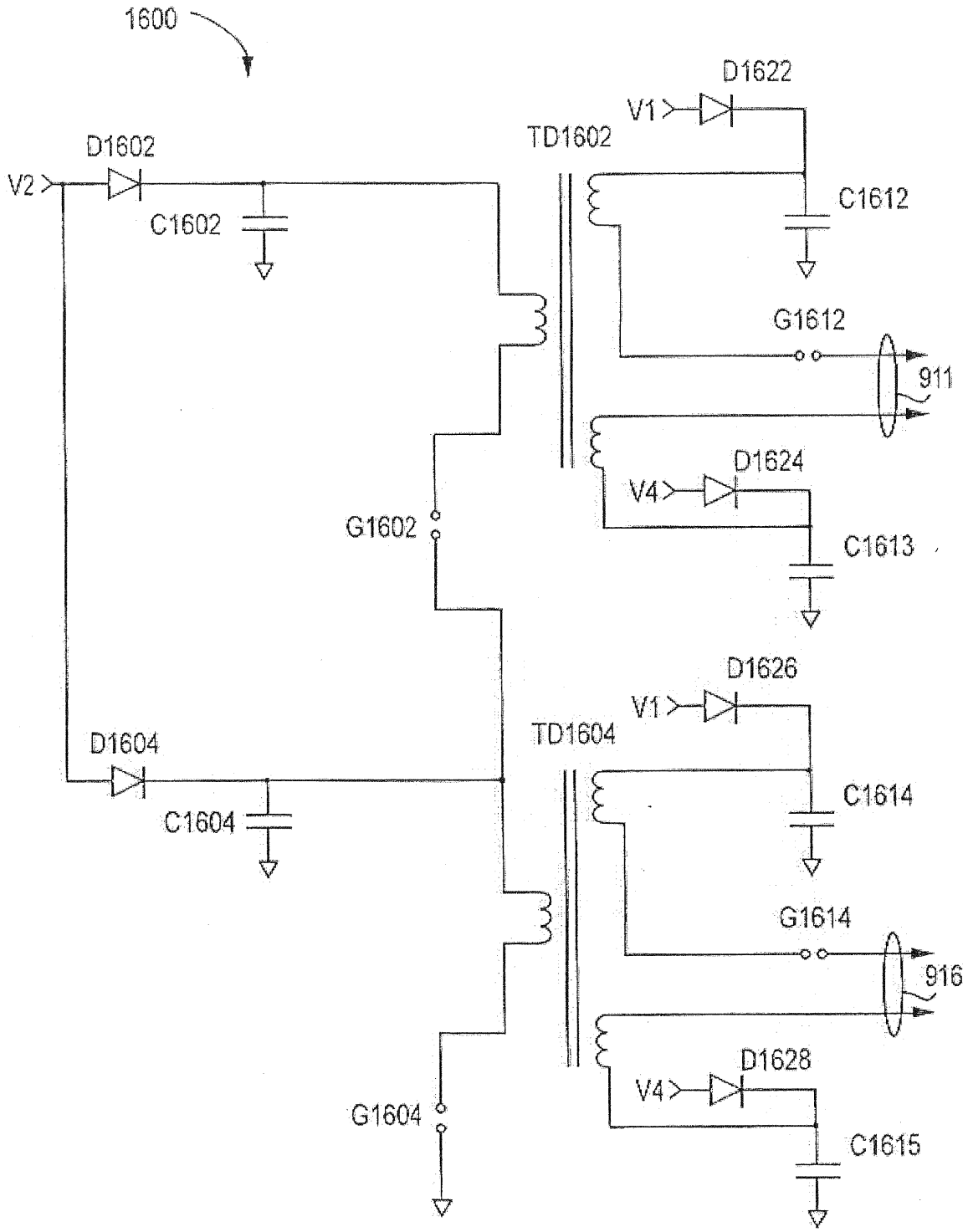
1600
D1622
V1
TD1602
D1602
V2
C1602
C1612
G1612
911
D1624
V4
G1602
C1613
D1626
V1
TD1604
D1604
C1614
C1604
G1614
916
D1628
V4
G1604
C1615

FIG. 16

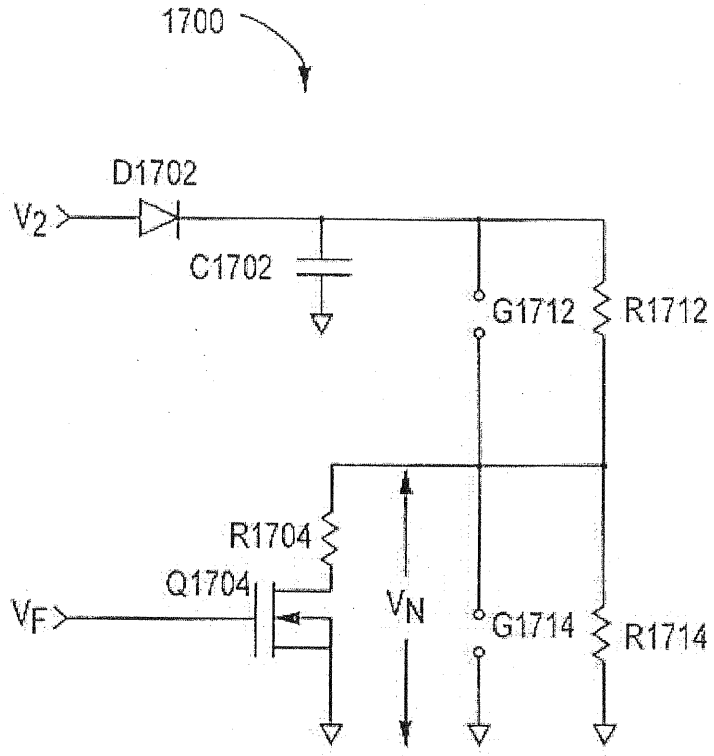
1700
D1702
V2
C1702
G1712
R1712
R1704
Q1704
VF
VN
G1714
R1714

FIG. 17