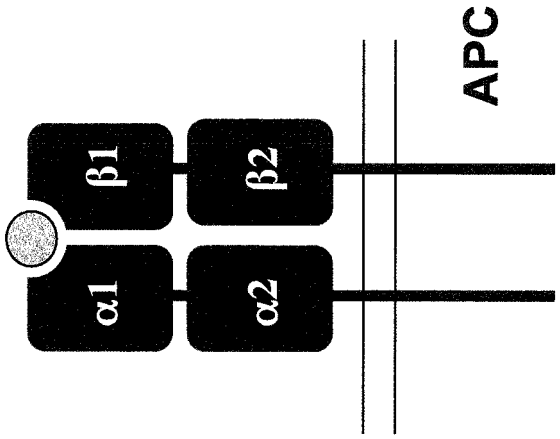

FIG. 1

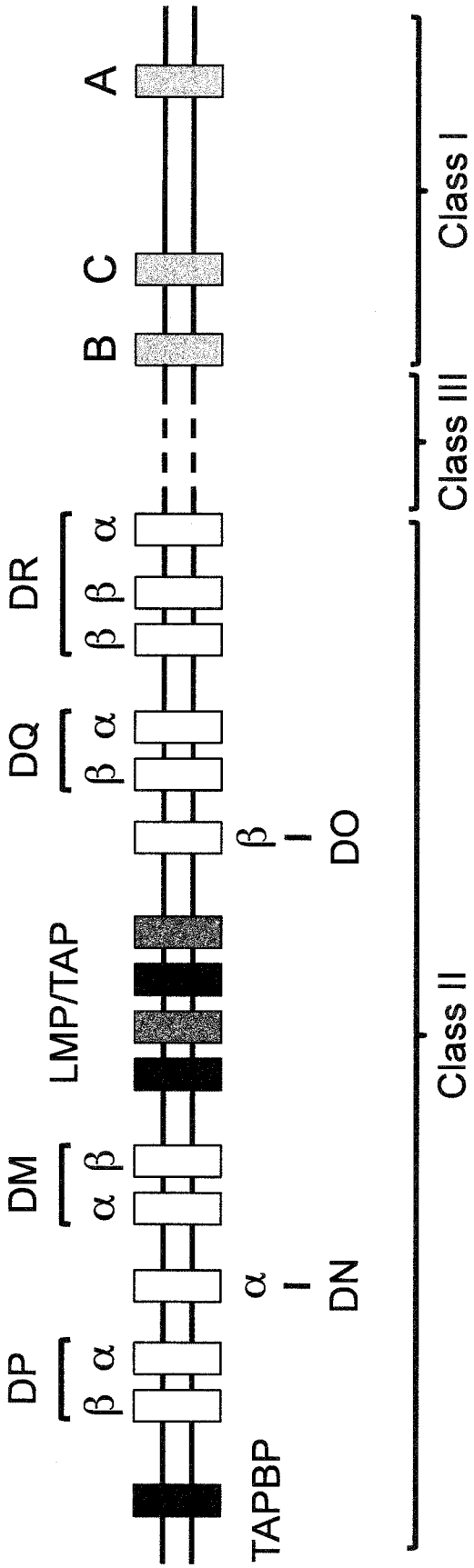
DP
β α
TAPBP
DM
α β
α
I
DN
LMP/TAP
DQ
β α
β
I
DO
DR
β β α
B C A
Class II
Class III
Class I

FIG. 2

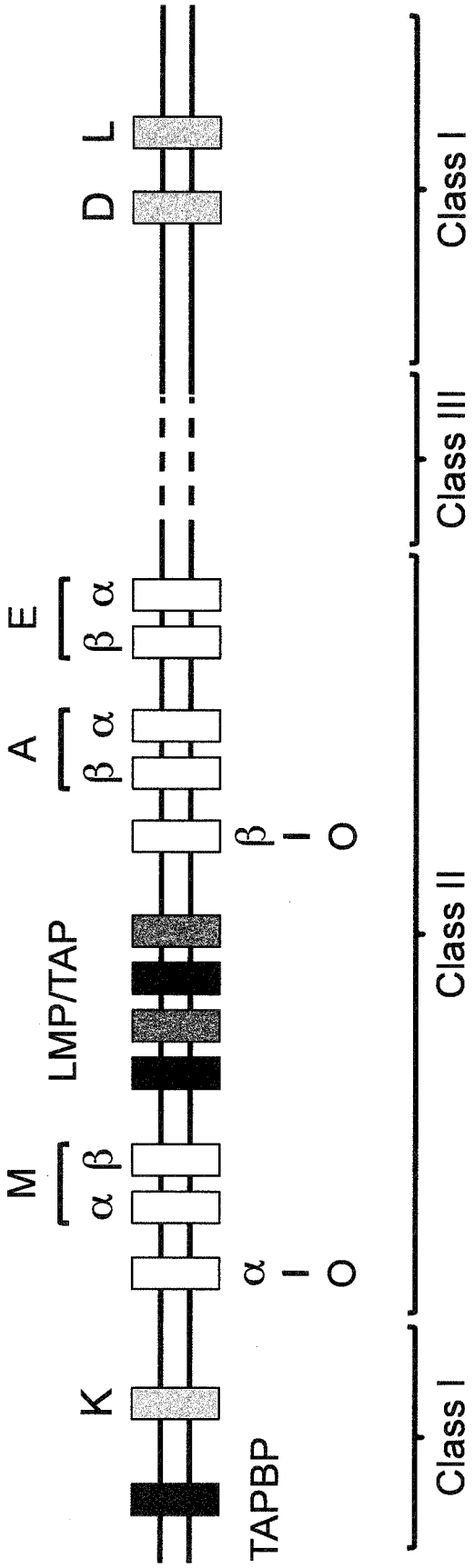
TAPBP
K
M
α β
LMP/TAP
α
I
O
A
β α
β
I
O
E
β α
D
L
Class I
Class II
Class III
Class I

FIG. 3

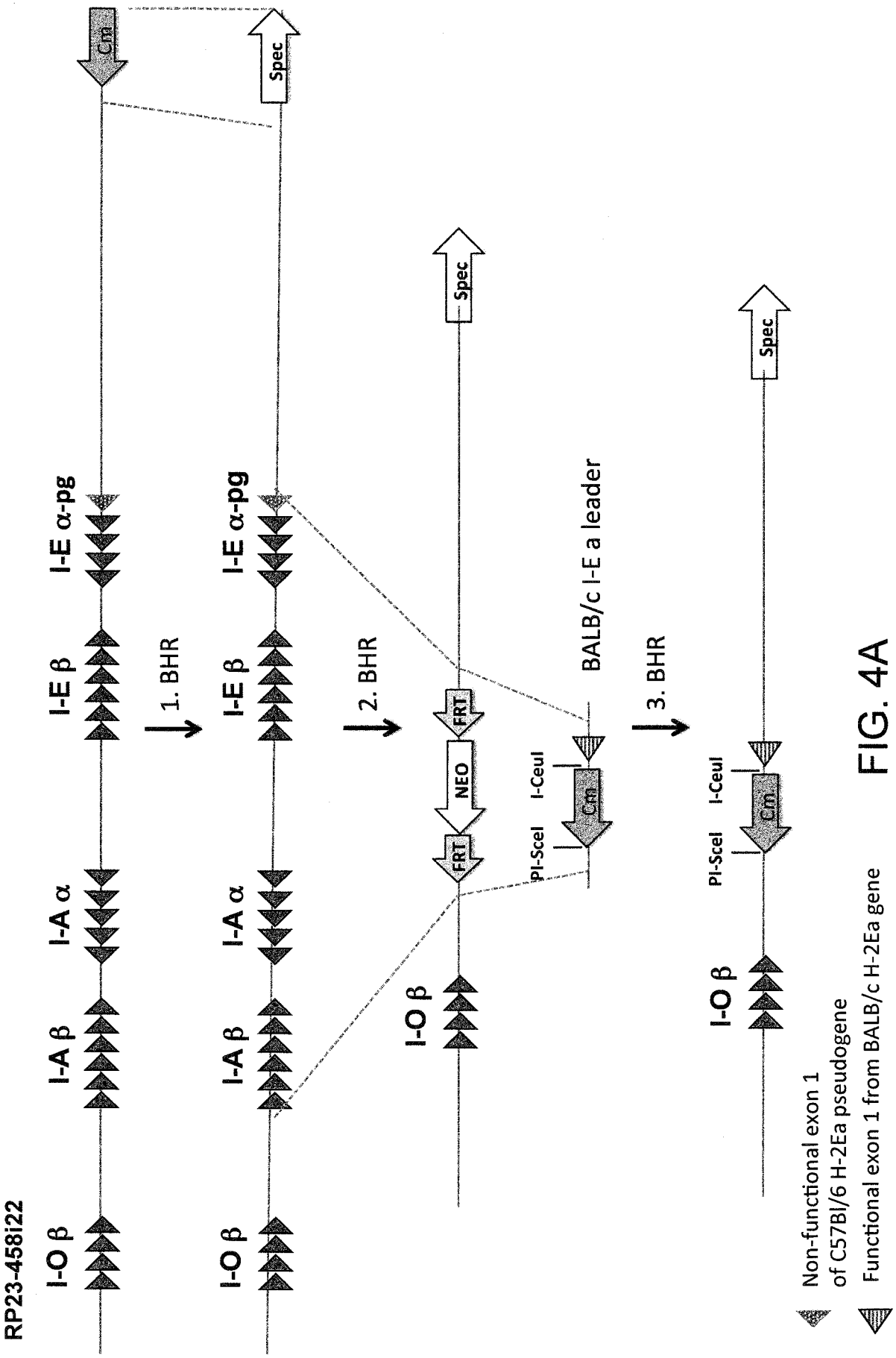
RP23-458i22
I-O β
I-A β
I-A α
I-E β
I-E α-pg
Cm
Spec
1. BHR
2. BHR
3. BHR
FRT
NEO
BALB/c I-E a leader
I-CeuI
PI-SceI
Non-functional exon 1 of C57Bl/6 H-2Ea pseudogene
Functional exon 1 from BALB/c H-2Ea gene

FIG. 4A

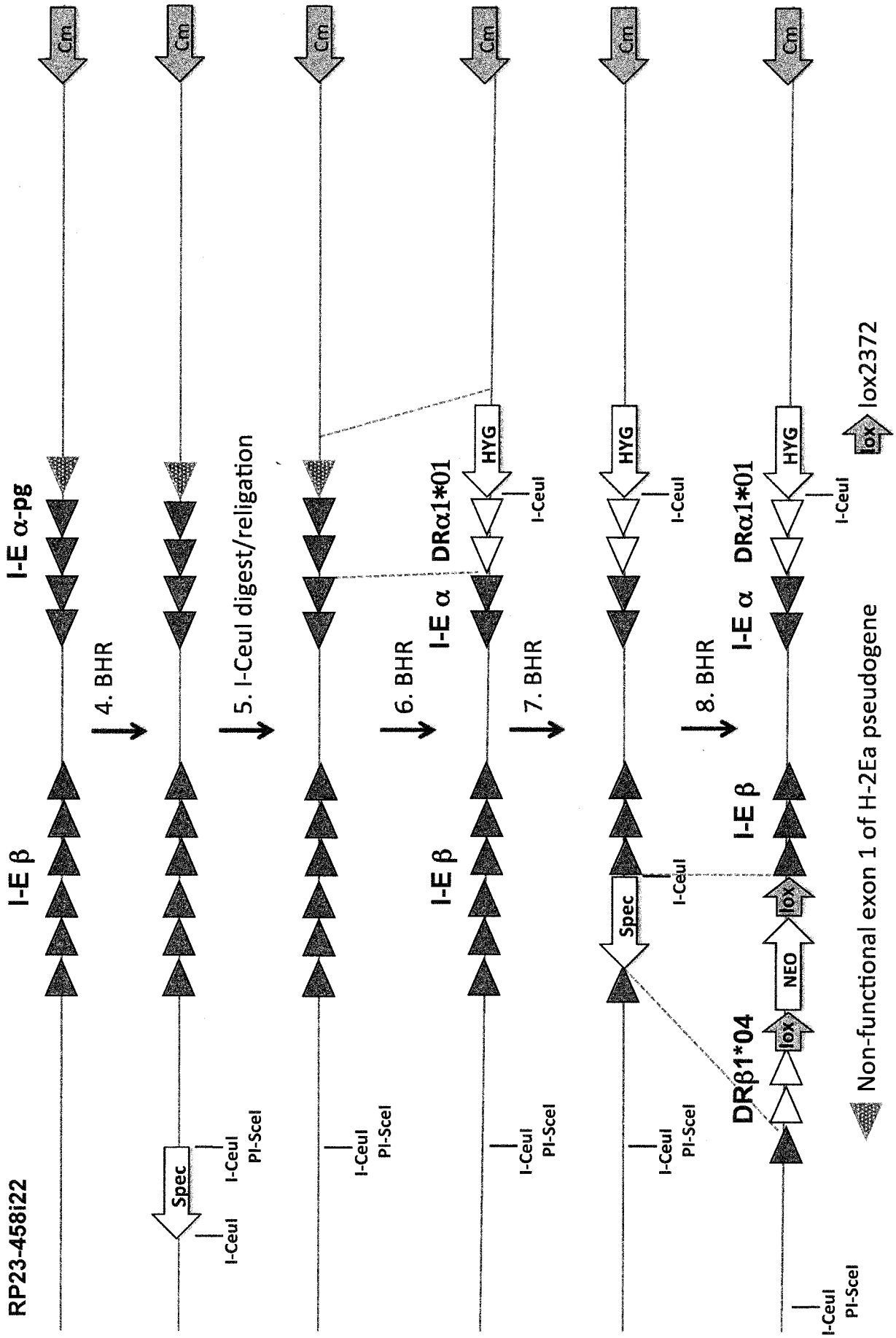
RP23-458i22
I-E β
I-E α-pg
Cm
4. BHR
Spec
I-CeuI
PI-SceI
5. I-CeuI digest/religation
6. BHR
I-E β
I-E α
DRα1*01
HYG
7. BHR
8. BHR
DRβ1*04
NEO
lox
lox2372
Non-functional exon 1 of H-2Ea pseudogene

FIG. 4B

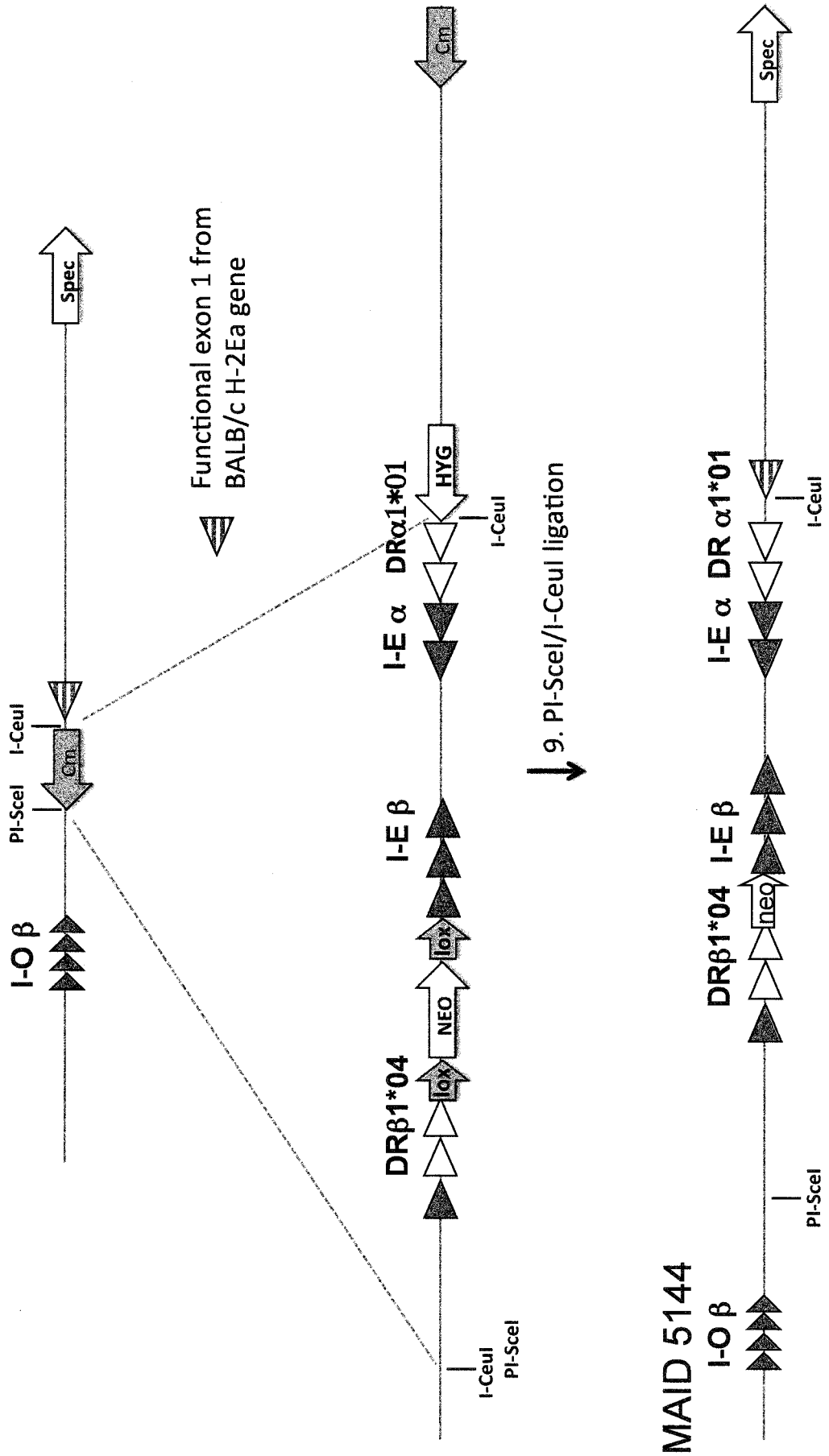
Spec
Functional exon 1 from
BALB/c H-2Ea gene
I-Ceul
Cm
PI-Scel
I-O β
Cm
HYG
DRα1*01
I-Ceul
I-E α
I-E β
Iox
NEO
Iox
DRβ1*04
I-Ceul
PI-Scel
9. PI-Scel/I-Ceul ligation
Spec
I-Ceul
I-E α
DR α1*01
I-E β
neo
DRβ1*04
PI-Scel
MAID 5144
I-O β

FIG. 4C

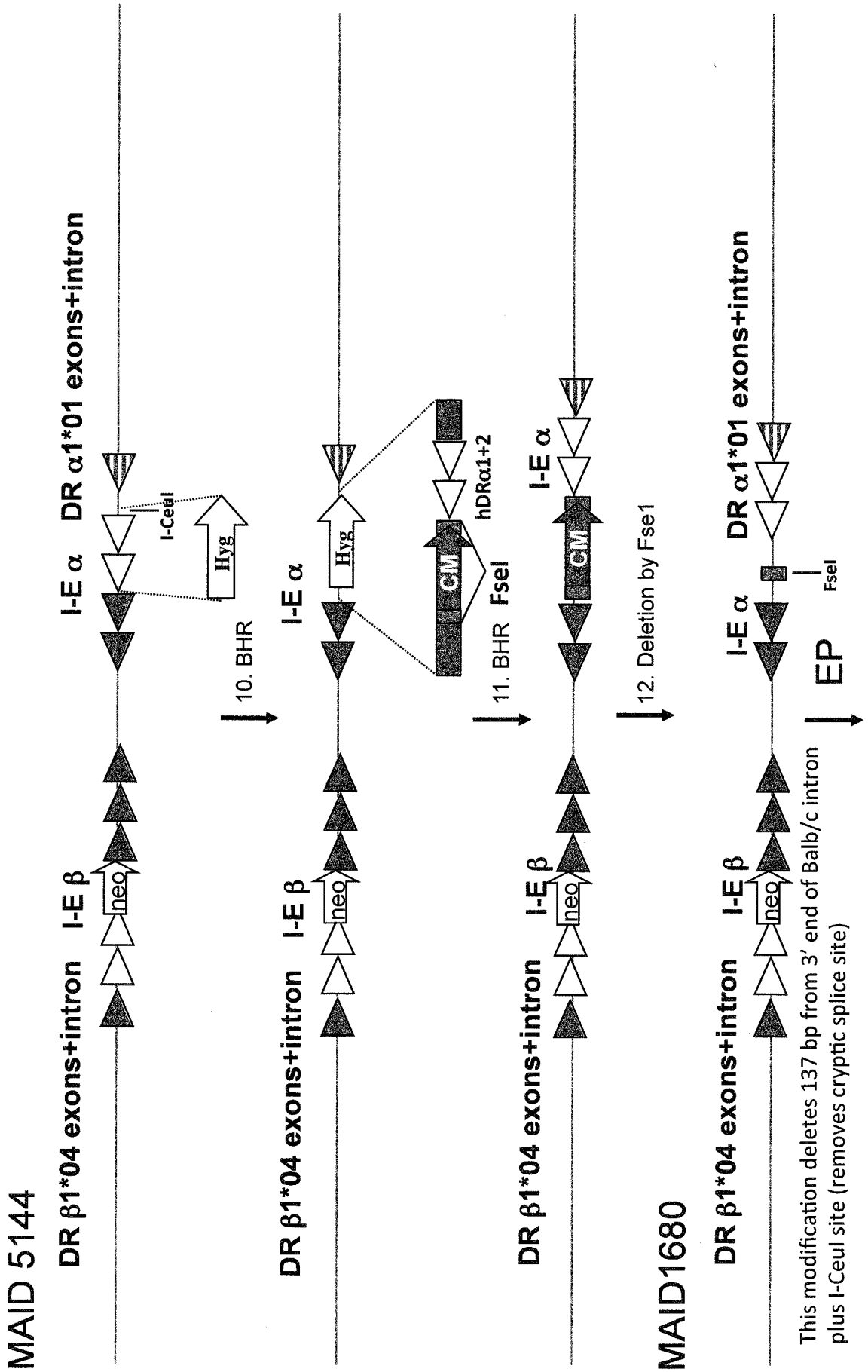
MAID 5144
DR β1*04 exons+intron
I-E β
neo
I-E α
DR α1*01 exons+intron
I-CeuI
Hyg
10. BHR
DR β1*04 exons+intron
I-E β
neo
I-E α
Hyg
CM
hDRα1+2
FseI
11. BHR
DR β1*04 exons+intron
I-E β
neo
I-E α
CM
12. Deletion by Fse1
MAID1680
DR β1*04 exons+intron
I-E β
neo
I-E α
DR α1*01 exons+intron
FseI
EP
This modification deletes 137 bp from 3' end of Balb/c intron plus I-CeuI site (removes cryptic splice site)

FIG. 4D

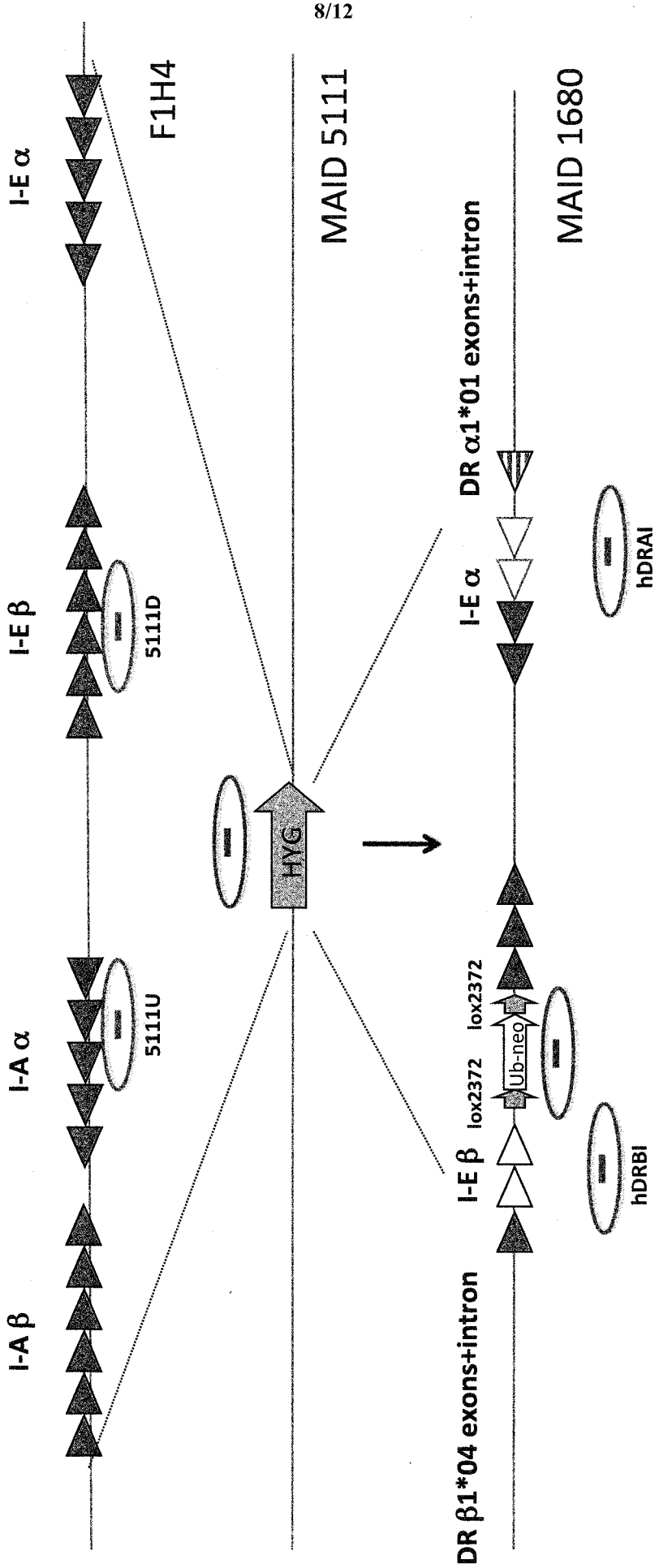
F1H4
MAID 5111
MAID 1680
I-E α
I-E β
I-A α
I-A β
5111D
5111U
HYG
DR α1*01 exons+intron
I-E α
hDRAI
lox2372
Ub-neo
lox2372
I-E β
hDRBI
DR β1*04 exons+intron

FIG. 5

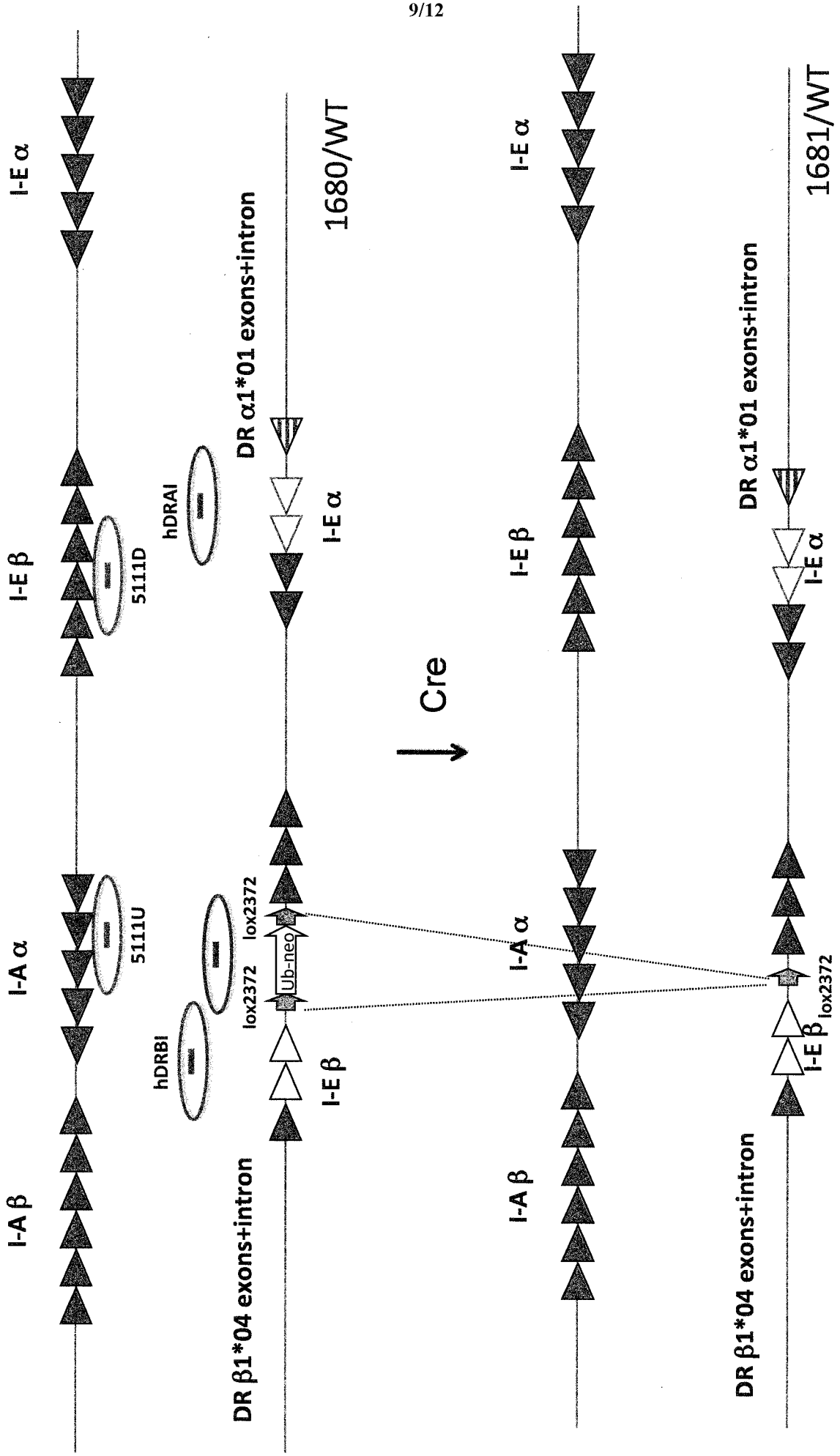
I-E α
I-E β
5111D
hDRAI
I-A α
5111U
hDRBI
I-A β
DR α1*01 exons+intron
1680/WT
I-E α
lox2372
Ub-neo
lox2372
I-E β
DR β1*04 exons+intron
Cre
I-E α
I-E β
I-A α
I-A β
1681/WT
DR α1*01 exons+intron
I-E α
lox2372
I-E β
DR β1*04 exons+intron

FIG. 6

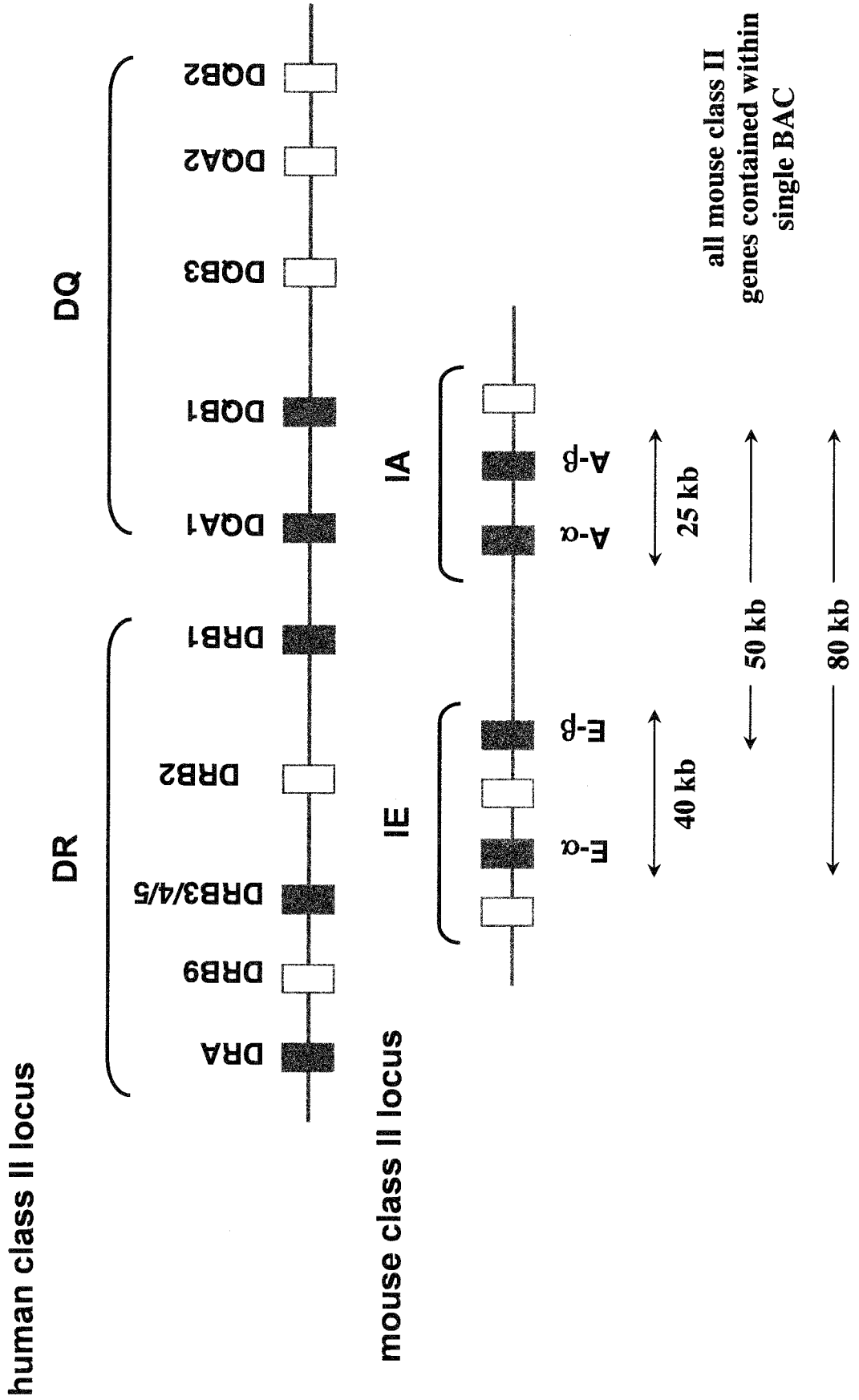
human class II locus
DR
DRA
DRB9
DRB3/4/5
DRB2
DRB1
DQ
DQA1
DQB1
DQB3
DQA2
DQB2
mouse class II locus
IE
E-α
E-β
IA
A-α
A-β
40 kb
25 kb
50 kb
80 kb
all mouse class II genes contained within single BAC

FIG. 7

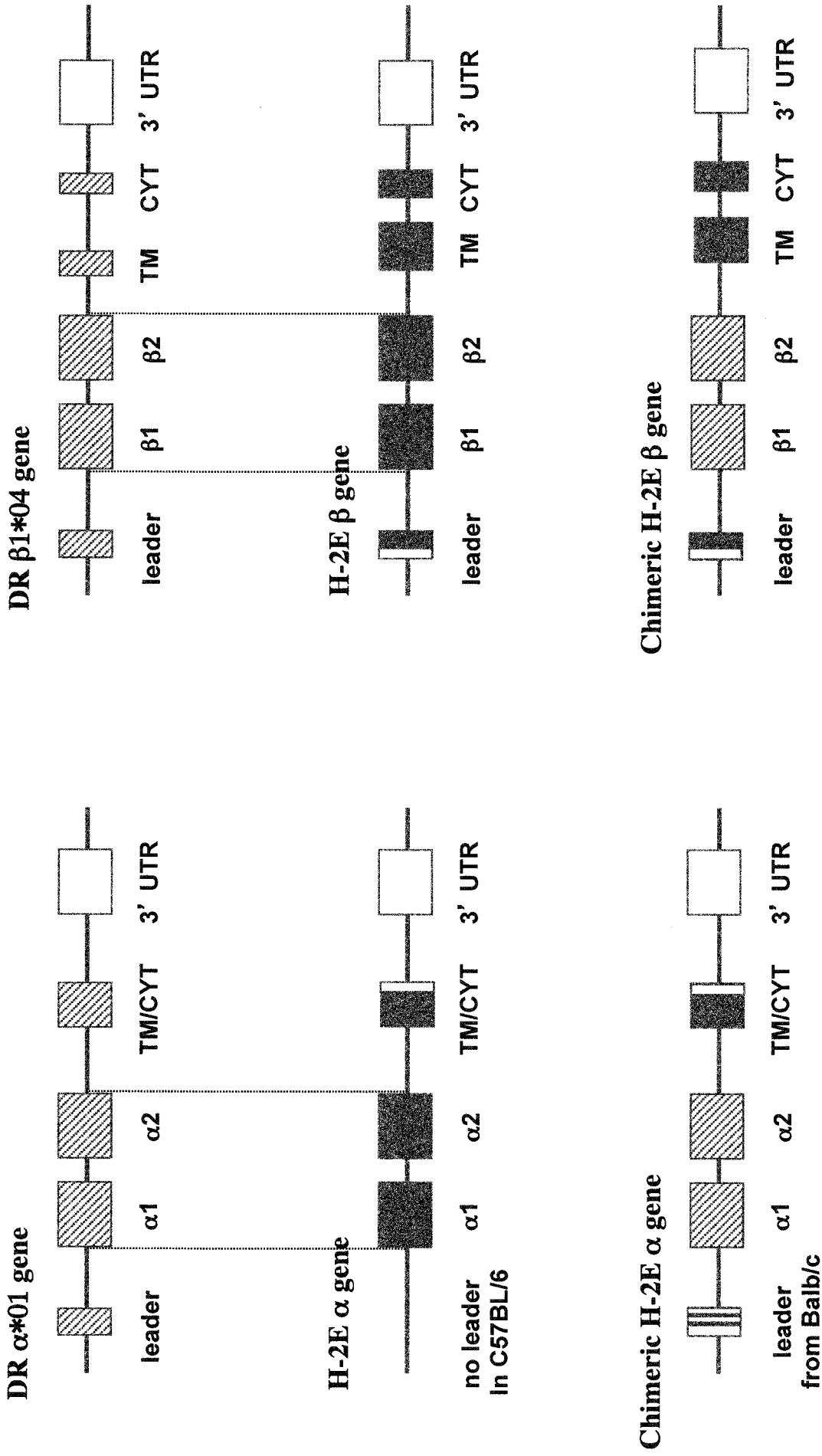
DR β1*04 gene
leader
β1
β2
TM
CYT
3' UTR
H-2E β gene
leader
β1
β2
TM
CYT
3' UTR
Chimeric H-2E β gene
leader
β1
β2
TM
CYT
3' UTR
DR α*01 gene
leader
α1
α2
TM/CYT
3' UTR
H-2E α gene
no leader
In C57BL/6
α1
α2
TM/CYT
3' UTR
Chimeric H-2E α gene
leader
from Balb/c
α1
α2
TM/CYT
3' UTR

FIG. 8

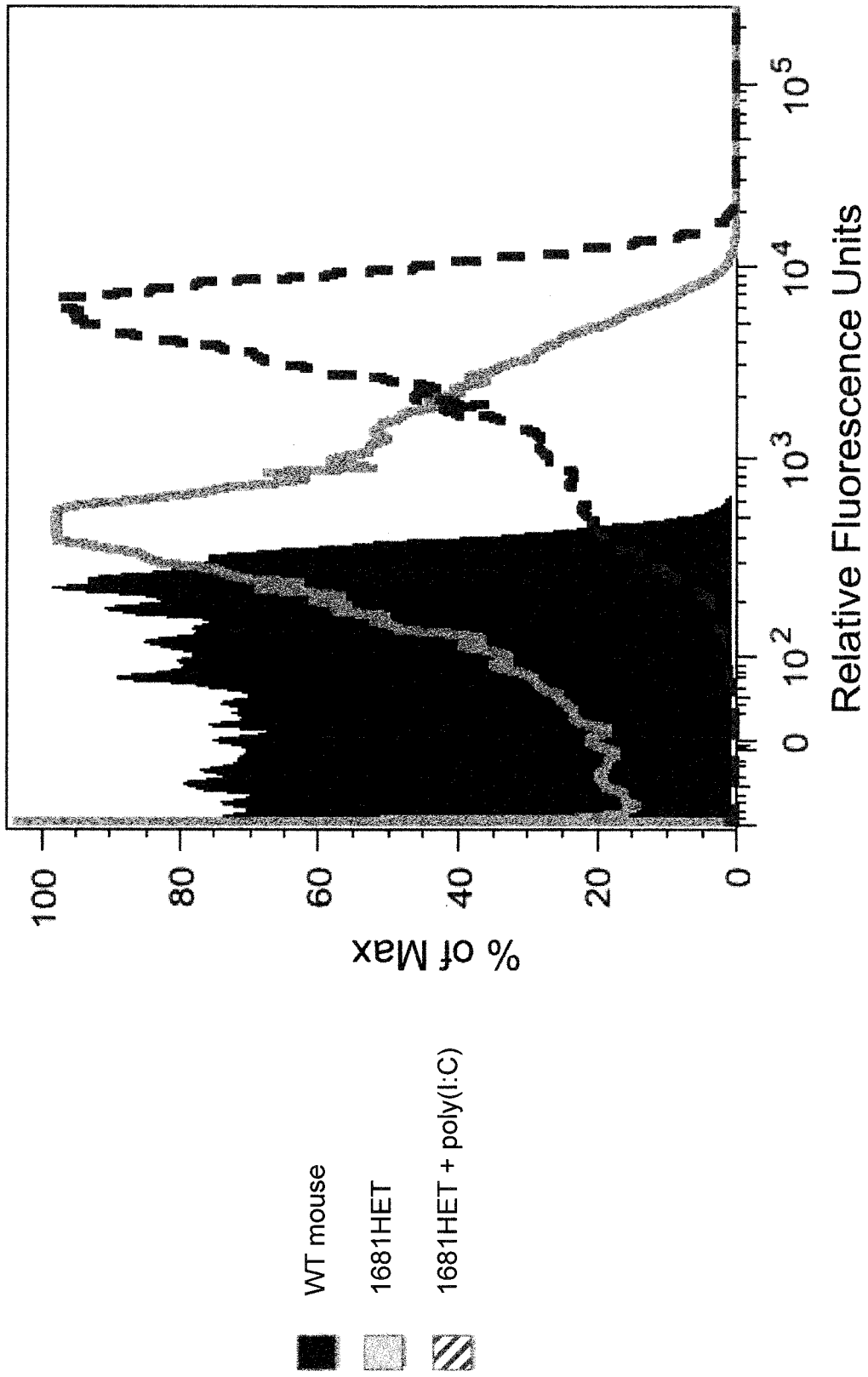
100
80
60
40
20
0
% of Max
0
10^2
10^3
10^4
10^5
Relative Fluorescence Units
WT mouse
1681HET
1681HET + poly(I:C)

FIG. 9

SEQUENCE LISTING

<110> Regeneron Pharmaceuticals, Inc.

<120> GENETICALLY MODIFIED MAJOR HISTOCOMPATIBILITY COMPLEX MICE

<130> 1210A-WO

<140> To be assigned
<141> Filed herewith

<150> 61/552,584
<151> 2011-10-28

<160> 26

<170> FastSEQ for Windows Version 4.0

<210> 1
<211> 19
<212> DNA
<213> Artificial Sequence

<220>
<223> Synthetic

<400> 1
cagaacgcca ggctgtaac 19

<210> 2
<211> 20
<212> DNA
<213> Artificial Sequence

<220>
<223> Synthetic

<400> 2
ggagagcagg gtcagtcaac 20

<210> 3
<211> 24
<212> DNA
<213> Artificial Sequence

<220>
<223> Synthetic

<400> 3
caccgccact cacagctcct taca 24

<210> 4
<211> 22
<212> DNA
<213> Artificial Sequence

<220>
<223> Synthetic

<400> 4
gtgggcacca tcttcatcat tc 22

<210> 5
<211> 22
<212> DNA
<213> Artificial Sequence

<220>
<223> Synthetic

<400> 5
cttcctttcc agggtgtgac tc 22

<210> 6
<211> 23
<212> DNA
<213> Artificial Sequence

<220>
<223> Synthetic

<400> 6
aggcctgcga tcaggtggca cct 23

<210> 7
<211> 17
<212> DNA
<213> Artificial Sequence

<220>
<223> Synthetic

<400> 7
tgcggccgat cttagcc 17

<210> 8
<211> 18
<212> DNA
<213> Artificial Sequence

<220>
<223> Synthetic

<400> 8
ttgaccgatt ccttgcgg 18

<210> 9
<211> 21
<212> DNA
<213> Artificial Sequence

<220>
<223> Synthetic

<400> 9
acgagcgggt tcggcccatt c 21

<210> 10
<211> 140
<212> DNA
<213> Artificial Sequence

<220>
<223> Synthetic

<400> 10
tttgtaaaca aagtctaccc agagacagat gacagacttc agctccaatg ctgattggtt 60
cctcacttgg gaccaaccct ctcgagtacc gttcgtataa tgtatgctat acgaagttat 120
atgcatccgg gtaggggagg 140

<210> 11
<211> 140
<212> DNA
<213> Artificial Sequence

<220>
<223> Synthetic

<400> 11
cctcgacctg cagccctagg ataacttcgt ataatgtatg ctatacgaac ggtagagctc 60
cacaggcatt tgggtgggca gggatggacg gtgactggga caatcgggat ggaagagcat 120
agaatgggag ttagggaaga 140

<210> 12
<211> 110
<212> DNA
<213> Artificial Sequence

<220>
<223> Synthetic

<400> 12
tgctgattgg ttcctcactt gggaccaacc ctaagcttta tctatgtcgg gtgcggagaa 60
agaggtaatg aaatggcaca aggagatcac acacccaaac caaactcgcc 110

<210> 13
<211> 96
<212> DNA
<213> Artificial Sequence

<220>
<223> Synthetic

<400> 13
cacatcagtg aggctagaat aaattaaaat cgctaatatg aaaatgggga tttgtacctc 60
tgagtgtgaa ggctgggaag actgctttca agggac 96

<210> 14
<211> 150
<212> DNA
<213> Artificial Sequence

<220>
<223> Synthetic

<400> 14
tccatcactt cactgggtag cacagctgta actgtccagc ctgggtaccg agctcggatc 60
cactagtaac ggccgccagt gtgctggaat tcgcccttga tcgagctccc tgggctgcag 120
gtggtgggcg ttgcgggtgg ggccggttaa 150

<210> 15
<211> 80
<212> DNA
<213> Artificial Sequence

<220>
<223> Synthetic

<400> 15
atctccatca gaagggcacc ggtataactt cgtataaggt atcctatacg aagttatatg 60
catggcctcc gcgccgggtt 80

<210> 16
<211> 90
<212> DNA
<213> Artificial Sequence

<220>
<223> Synthetic

<400> 16
ataacttcgt ataaggtatc ctatacgaag ttatctcgag tggcttacag gtaggtgcgt 60
gaagcttcta caagcacagt tgccccctgg 90

<210> 17
<211> 90
<212> DNA
<213> Artificial Sequence

<220>
<223> Synthetic

<400> 17
ctgtttcttc cctaactccc attctatgct cttccatccc gaccgcggcc caatctctct 60
ccactacttc ctgcctacat gtatgtaggt 90

<210> 18
<211> 80
<212> DNA
<213> Artificial Sequence

<220>
<223> Synthetic

<400> 18
caaggtttcc tcctatgatg cttgtgtgaa actcggggcc ggccagcatt taacagtaca 60
gggatgggag cacagctcac 80

<210> 19
<211> 80
<212> DNA
<213> Artificial Sequence

<220>
<223> Synthetic

<400> 19
gaaagcagtc ttcccagcct tcacactcag aggtacaaat ccccattttc atattagcga 60
ttttaattta ttctagcctc 80

<210> 20
<211> 80
<212> DNA
<213> Artificial Sequence

<220>
<223> Synthetic

<400> 20
tcttccctaa ctcccattct atgctcttcc atcccgaccg cggcccaatc tctctccact 60
acttcctgcc tacatgtatg 80

<210> 21
<211> 21
<212> DNA
<213> Artificial Sequence

<220>
<223> Synthetic

<400> 21
ctggcggctt gaagaatttg g 21

<210> 22
<211> 24
<212> DNA
<213> Artificial Sequence

<220>
<223> Synthetic

<400> 22
catgatttcc aggttggctt tgtc 24

<210> 23
<211> 26
<212> DNA
<213> Artificial Sequence

<220>
<223> Synthetic

<400> 23
cgatttgcca gctttgaggc tcaagg 26

<210> 24
<211> 20
<212> DNA
<213> Artificial Sequence

<220>
<223> Synthetic

<400> 24
aggcttgggt gctccacttg 20

<210> 25
<211> 21
<212> DNA
<213> Artificial Sequence

<220>
<223> Synthetic

<400> 25
gaccctggtg atgctggaaa c 21

<210> 26
<211> 27
<212> DNA
<213> Artificial Sequence

<220>
<223> Synthetic

<400> 26
caggtgtaaa cctctccact ccgagga 27