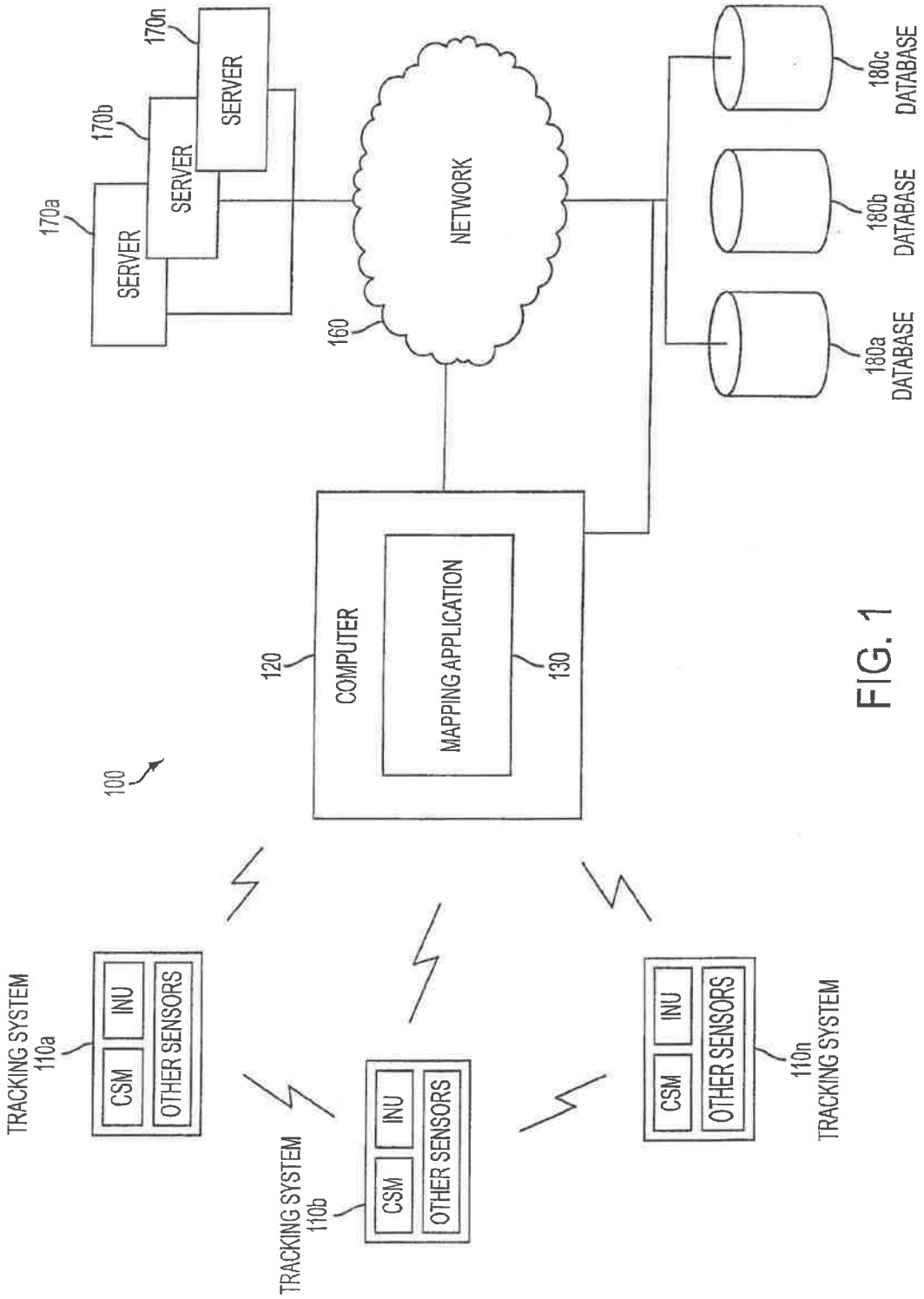
170n
SERVER
170b
SERVER
170a
SERVER
NETWORK
160
180c
DATABASE
180b
DATABASE
180a
DATABASE
120
COMPUTER
MAPPING APPLICATION
130
100
TRACKING SYSTEM
110a
CSM
INU
OTHER SENSORS
TRACKING SYSTEM
110b
CSM
INU
OTHER SENSORS
CSM
INU
OTHER SENSORS
110n
TRACKING SYSTEM

FIG. 1

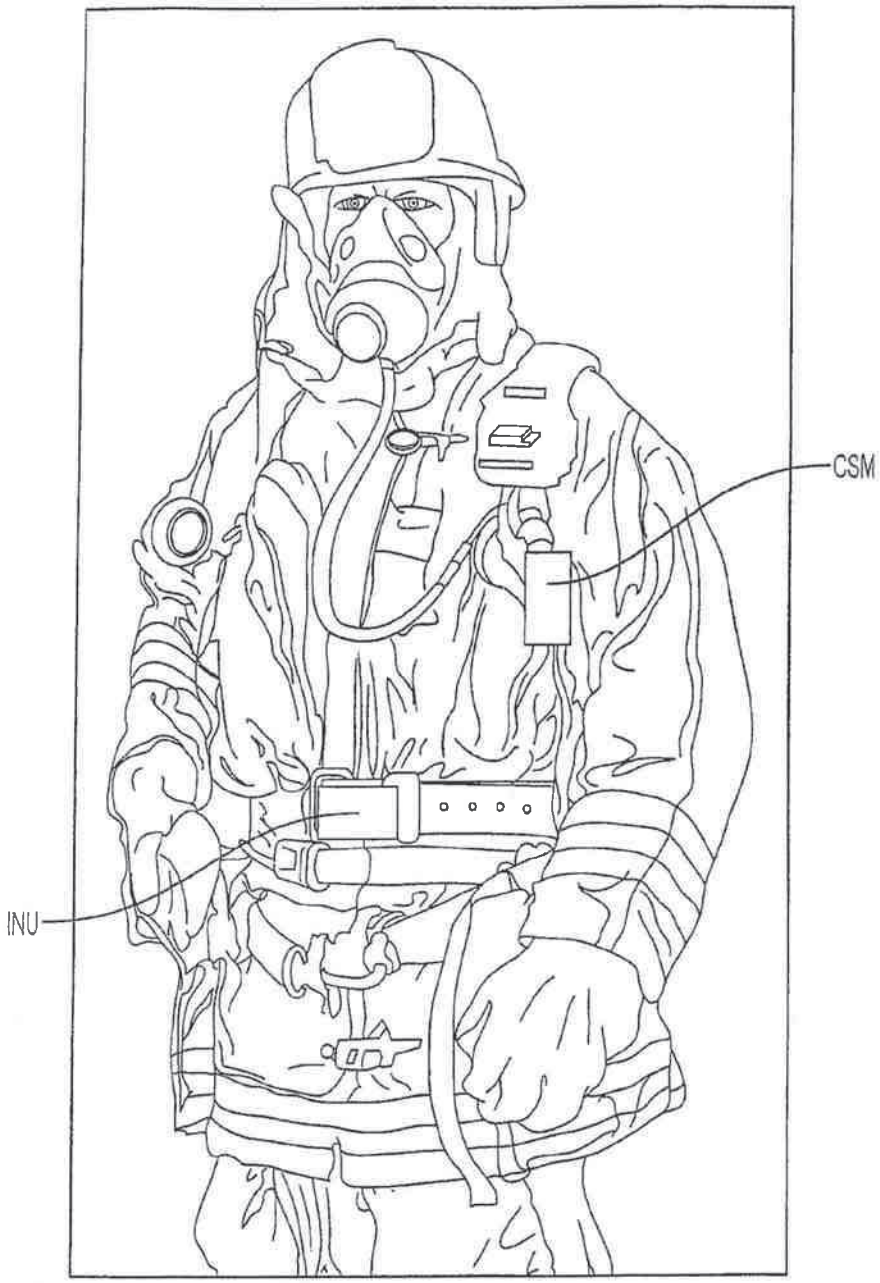

FIG. 2

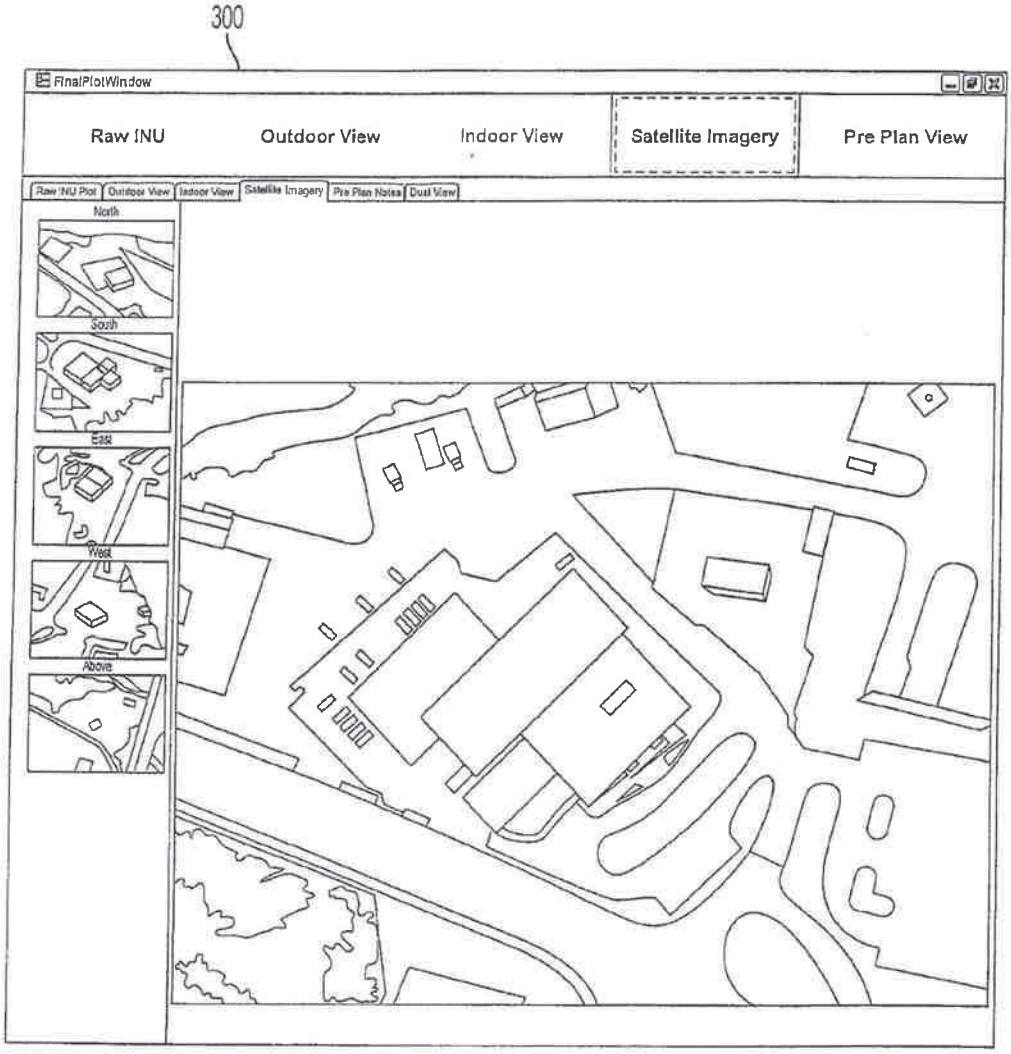
300
FinalPlotWindow
Raw INU
Outdoor View
Indoor View
Satellite Imagery
Pre Plan View
Raw INU Plot
Outdoor View
Indoor View
Satellite Imagery
Pre Plan Notes
Dual View
North
South
East
West
Above

FIG. 3

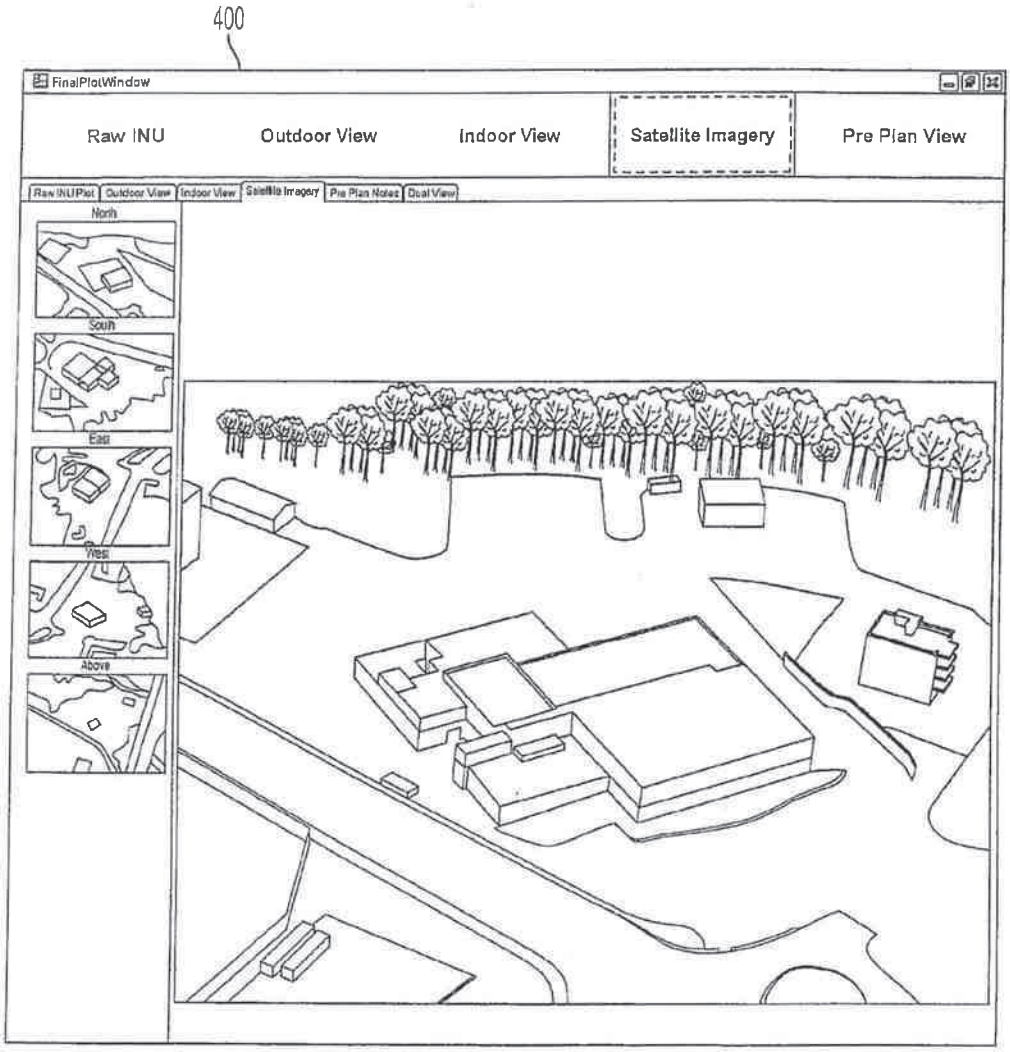
400
FinalPlotWindow
Raw INU
Outdoor View
Indoor View
Satellite Imagery
Pre Plan View
Raw INUPlot
Outdoor View
Indoor View
Satellite Imagery
Pre Plan Notes
Dual View
North
South
East
West
Above

FIG. 4

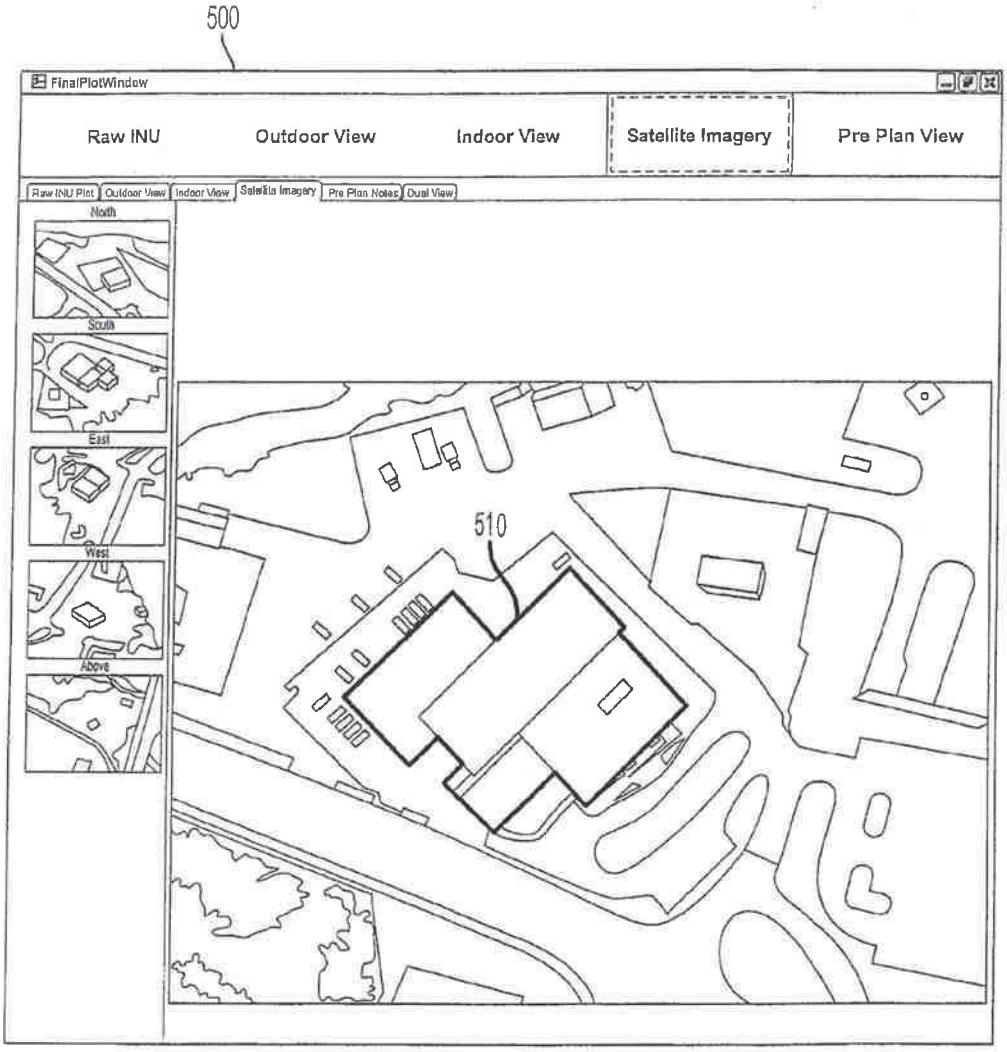
500
FinalPlotWindow
Raw INU
Outdoor View
Indoor View
Satellite Imagery
Pre Plan View
Raw INU Plot
Outdoor View
Indoor View
Satellite Imagery
Pre Plan Notes
Dual View
North
South
East
West
Above
510

FIG. 5

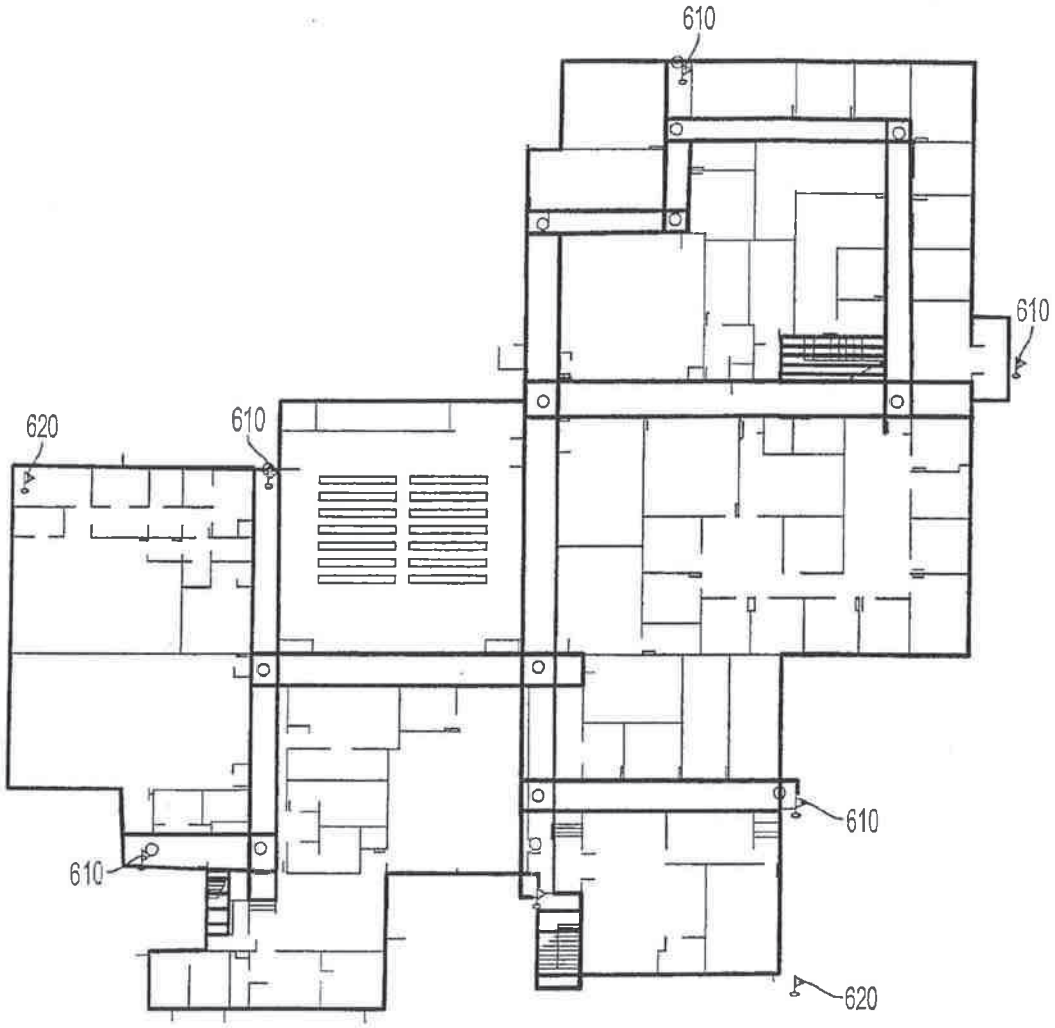

FIG. 6

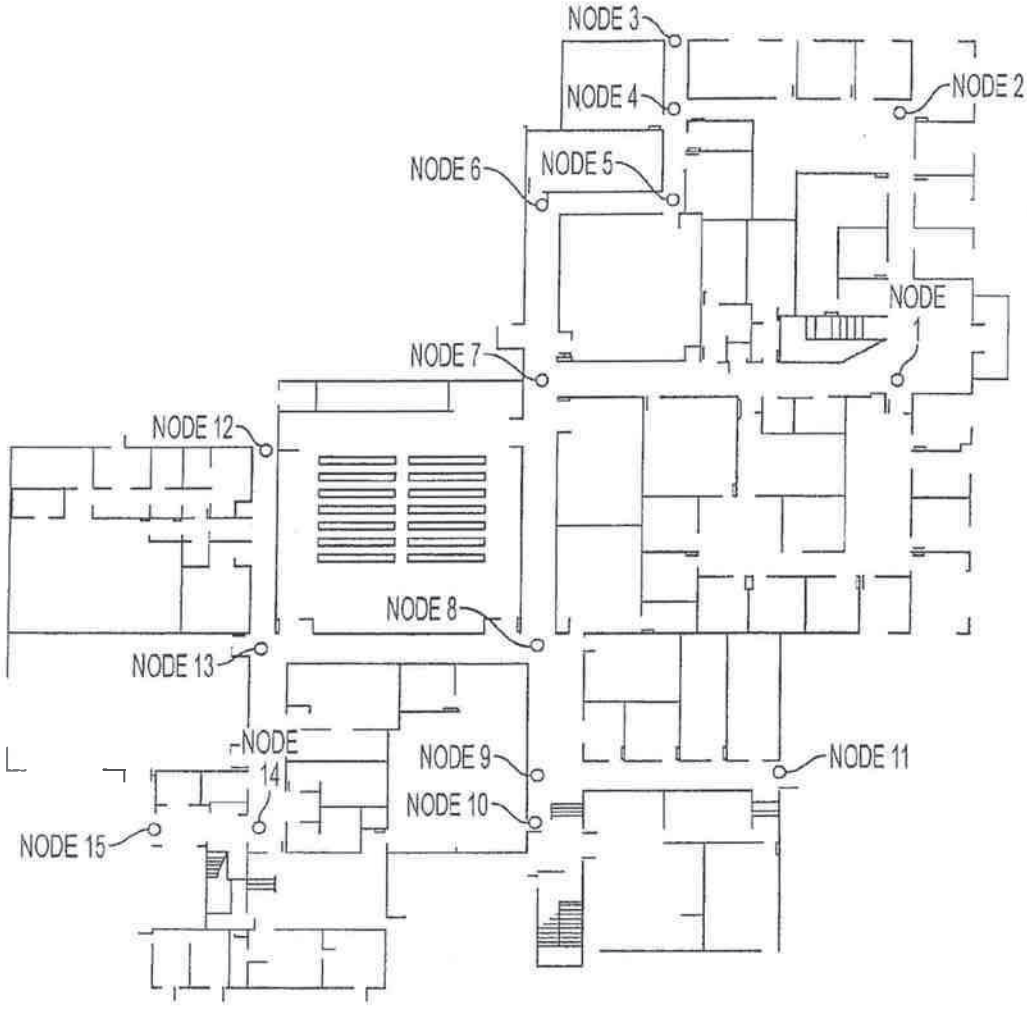
NODE 3
NODE 4
NODE 2
NODE 6
NODE 5
NODE
NODE 7
NODE 12
NODE 8
NODE 13
NODE
14
NODE 9
NODE 11
NODE 10
NODE 15

FIG. 7

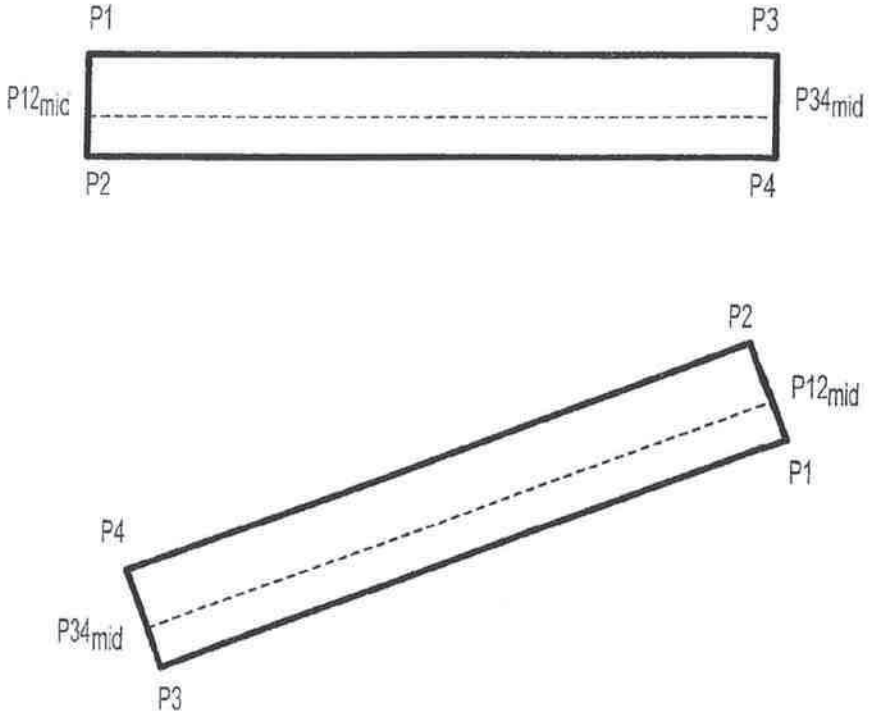

FIG. 8

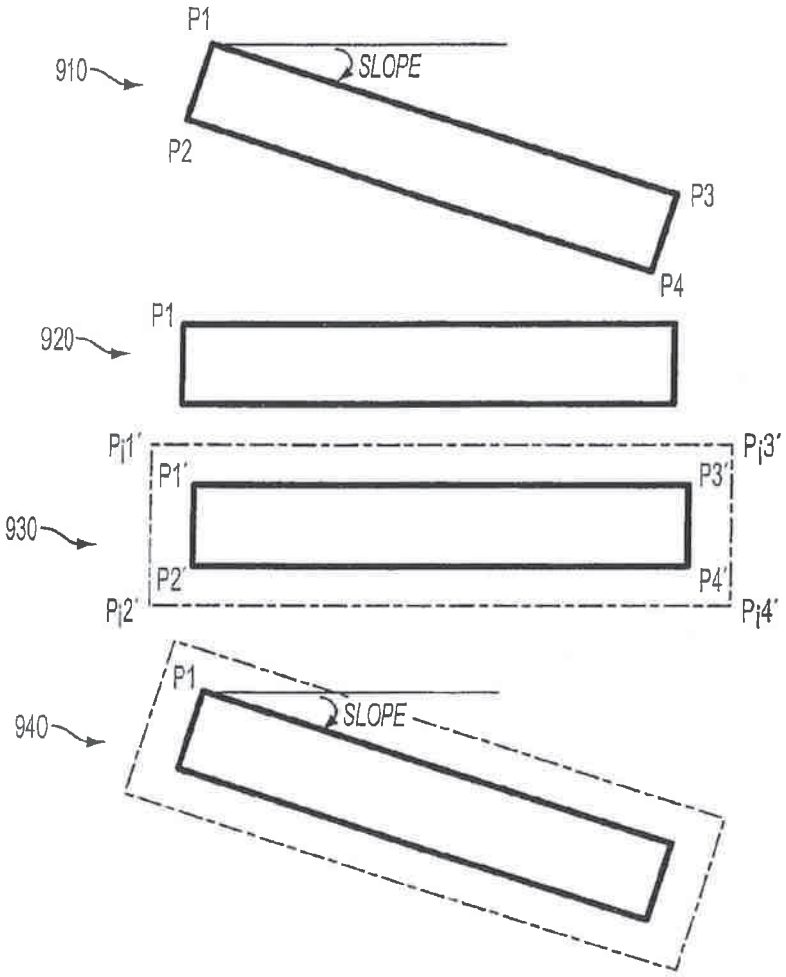
P1
910
SLOPE
P2
P3
P4
P1
920
Pi1'
P1'
P3'
Pi3'
930
P2'
P4'
Pi2'
Pi4'
P1
940
SLOPE

FIG. 9

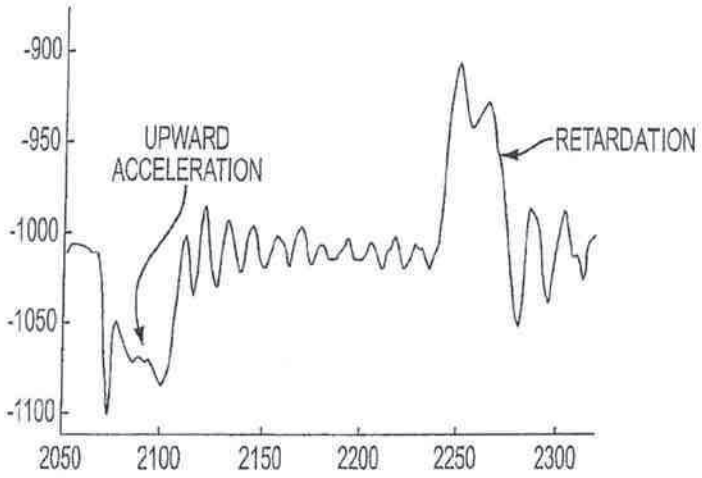

FIG. 10A

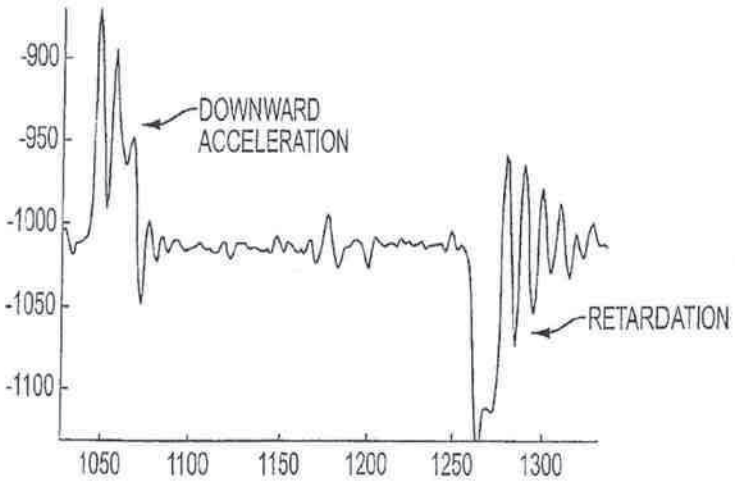

FIG. 10B

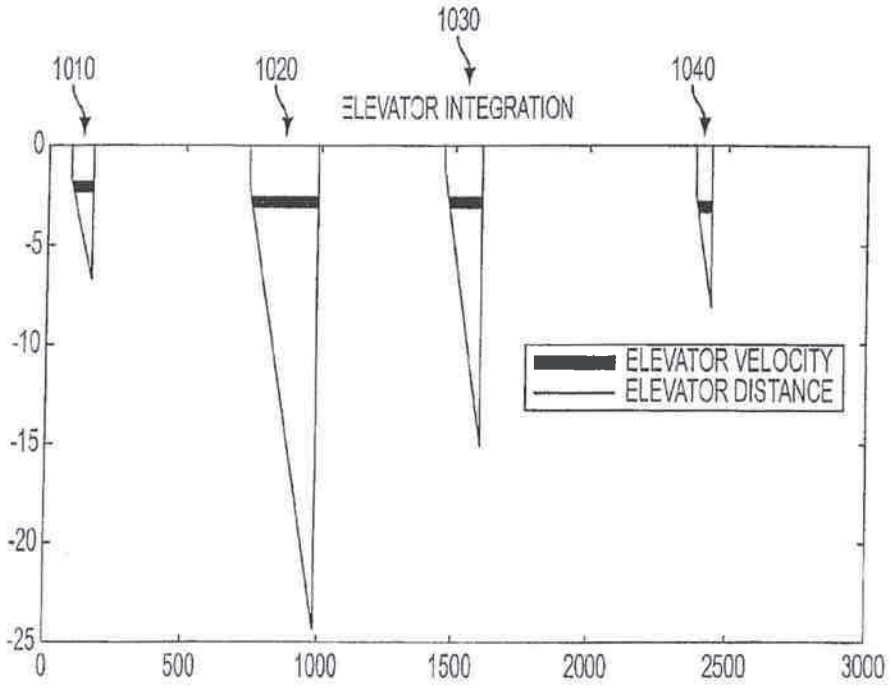
1030
1010
1020
1040
ELEVATOR INTEGRATION
0
-5
-10
-15
-20
-25
0
500
1000
1500
2000
2500
3000
ELEVATOR VELOCITY
ELEVATOR DISTANCE

FIG. 10C

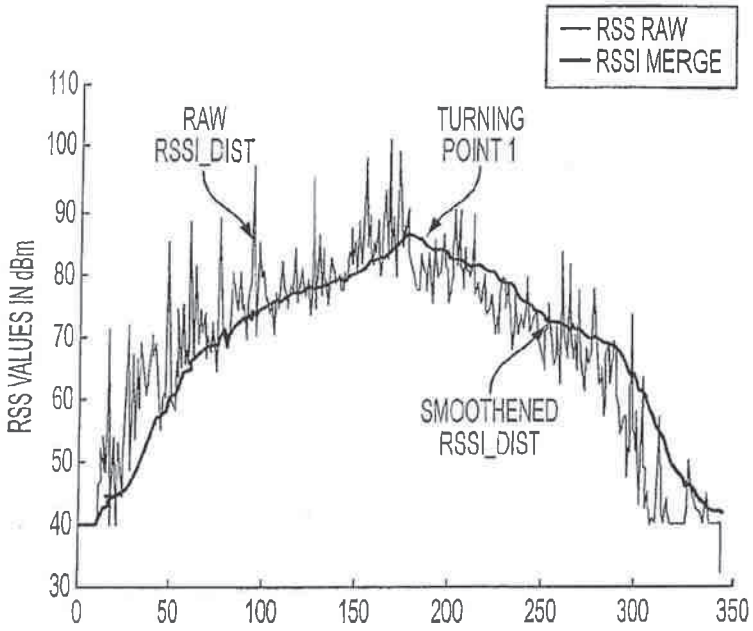

FIG. 11A

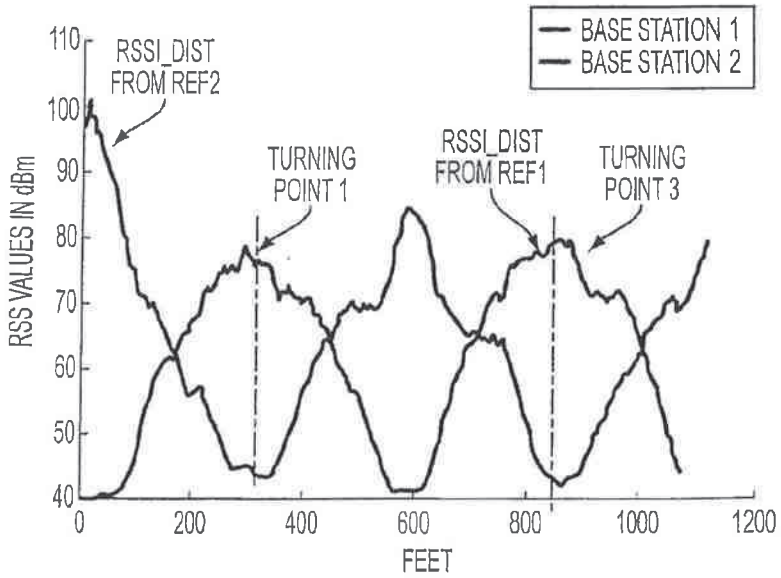

FIG. 11B

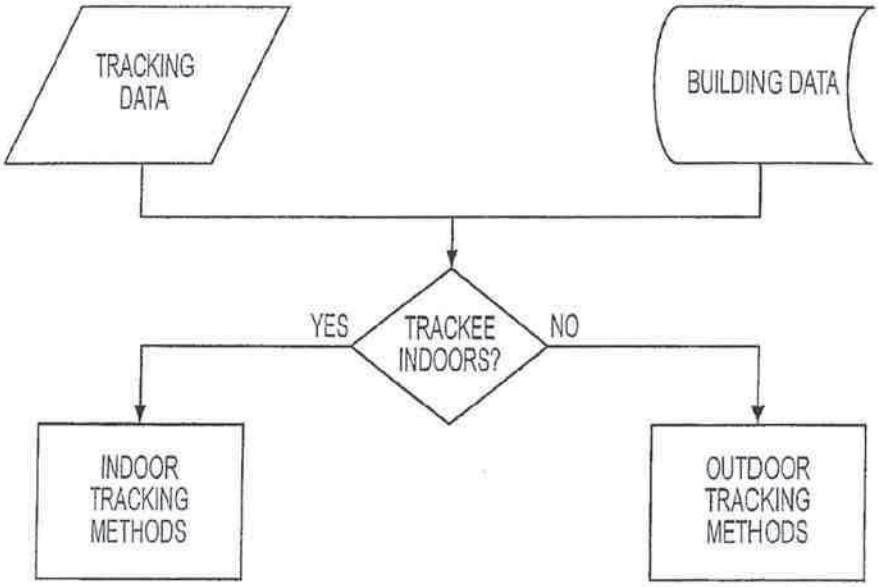
TRACKING DATA
BUILDING DATA
YES
TRACKEE INDOORS?
NO
INDOOR TRACKING METHODS
OUTDOOR TRACKING METHODS

FIG. 12

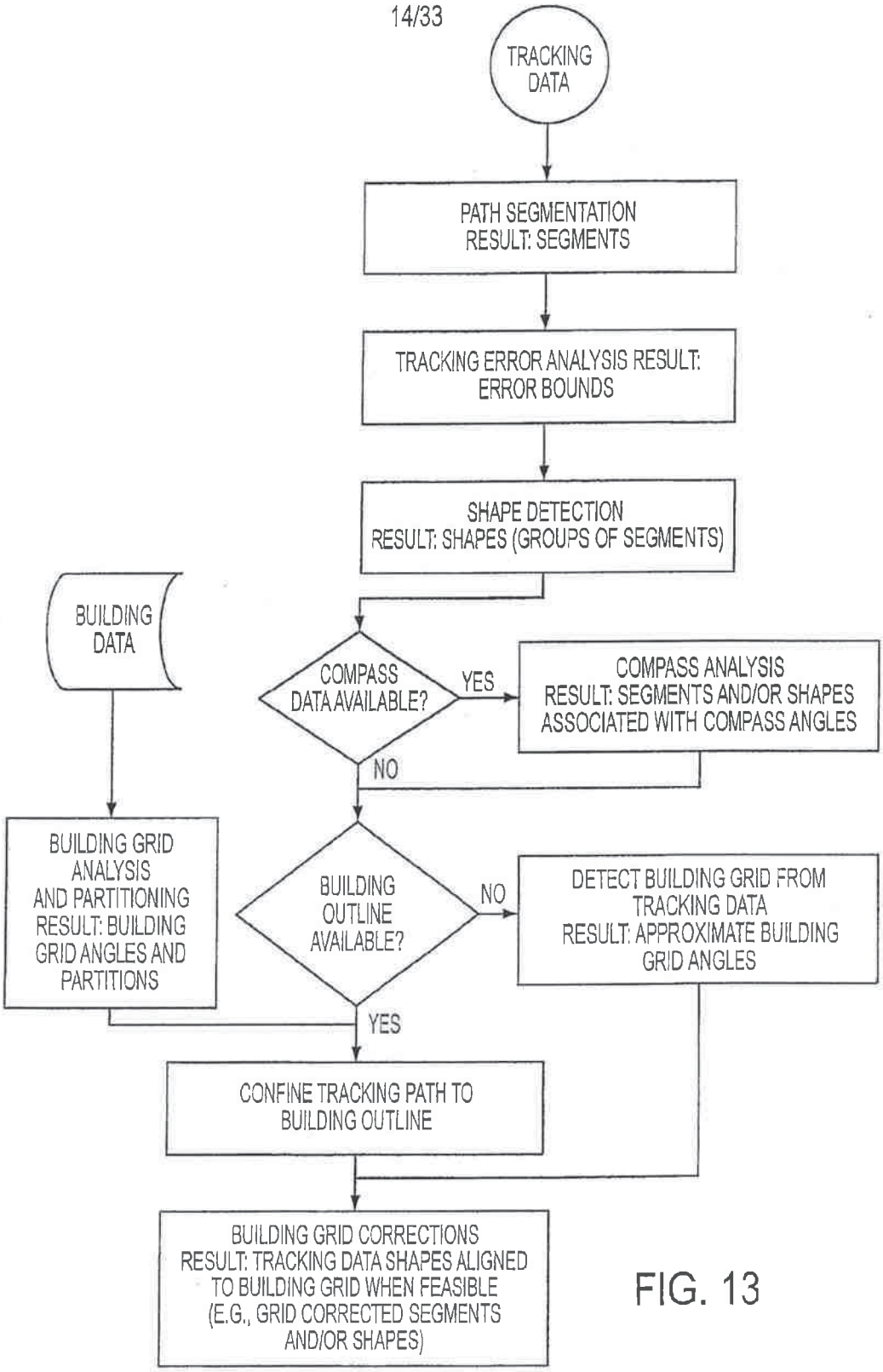
TRACKING DATA
PATH SEGMENTATION RESULT: SEGMENTS
TRACKING ERROR ANALYSIS RESULT: ERROR BOUNDS
SHAPE DETECTION RESULT: SHAPES (GROUPS OF SEGMENTS)
BUILDING DATA
COMPASS DATA AVAILABLE?
YES
COMPASS ANALYSIS RESULT: SEGMENTS AND/OR SHAPES ASSOCIATED WITH COMPASS ANGLES
NO
BUILDING GRID ANALYSIS AND PARTITIONING RESULT: BUILDING GRID ANGLES AND PARTITIONS
BUILDING OUTLINE AVAILABLE?
NO
DETECT BUILDING GRID FROM TRACKING DATA RESULT: APPROXIMATE BUILDING GRID ANGLES
YES
CONFINE TRACKING PATH TO BUILDING OUTLINE
BUILDING GRID CORRECTIONS RESULT: TRACKING DATA SHAPES ALIGNED TO BUILDING GRID WHEN FEASIBLE (E.G., GRID CORRECTED SEGMENTS AND/OR SHAPES)

FIG. 13

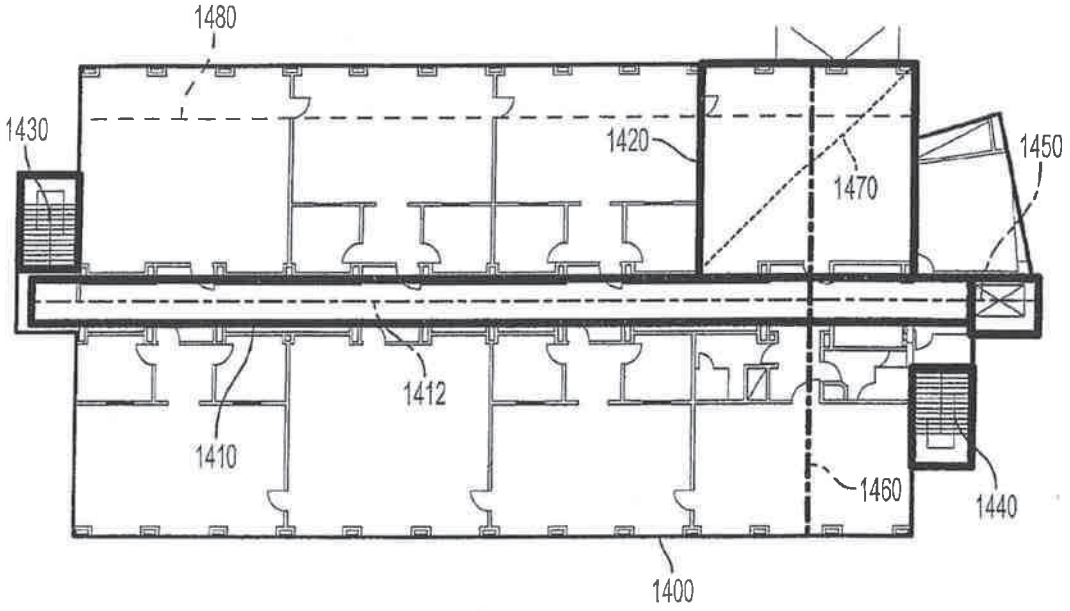

FIG. 14

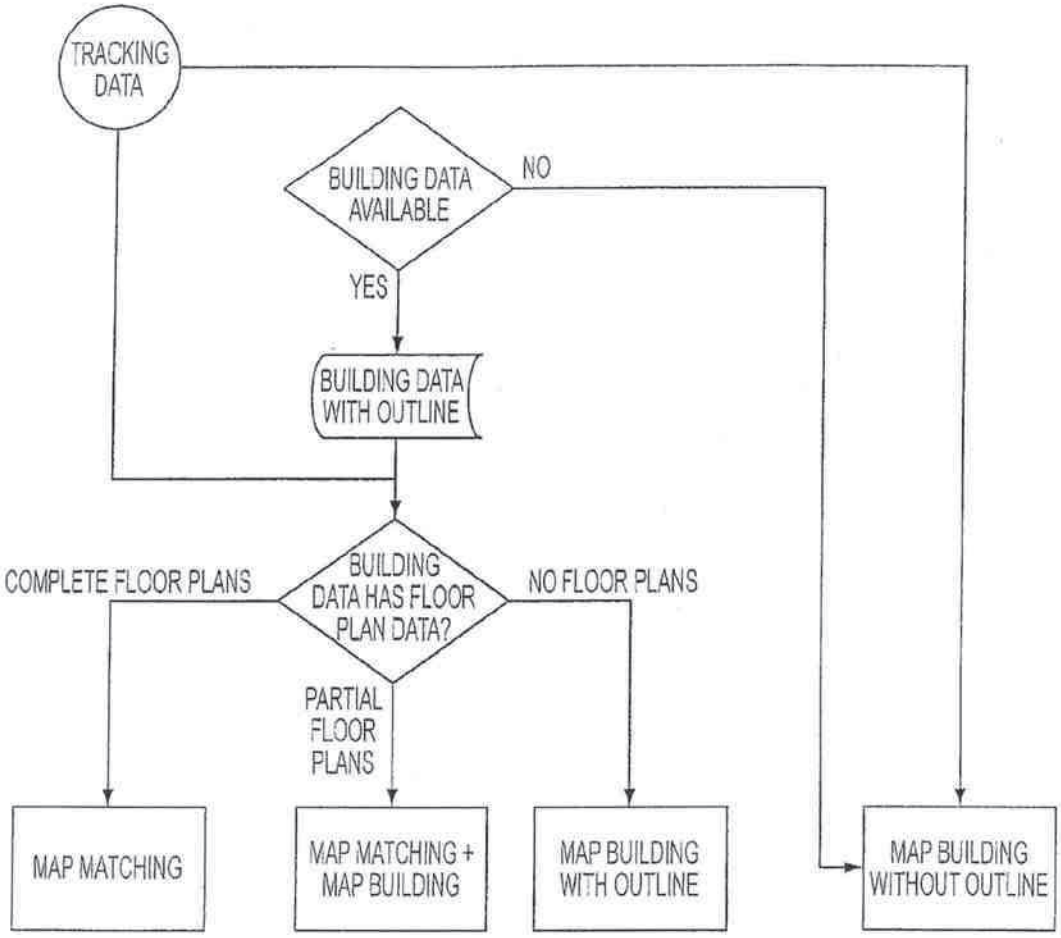
TRACKING DATA
BUILDING DATA AVAILABLE
NO
YES
BUILDING DATA WITH OUTLINE
BUILDING DATA HAS FLOOR PLAN DATA?
COMPLETE FLOOR PLANS
NO FLOOR PLANS
PARTIAL FLOOR PLANS
MAP MATCHING
MAP MATCHING + MAP BUILDING
MAP BUILDING WITH OUTLINE
MAP BUILDING WITHOUT OUTLINE

FIG. 15

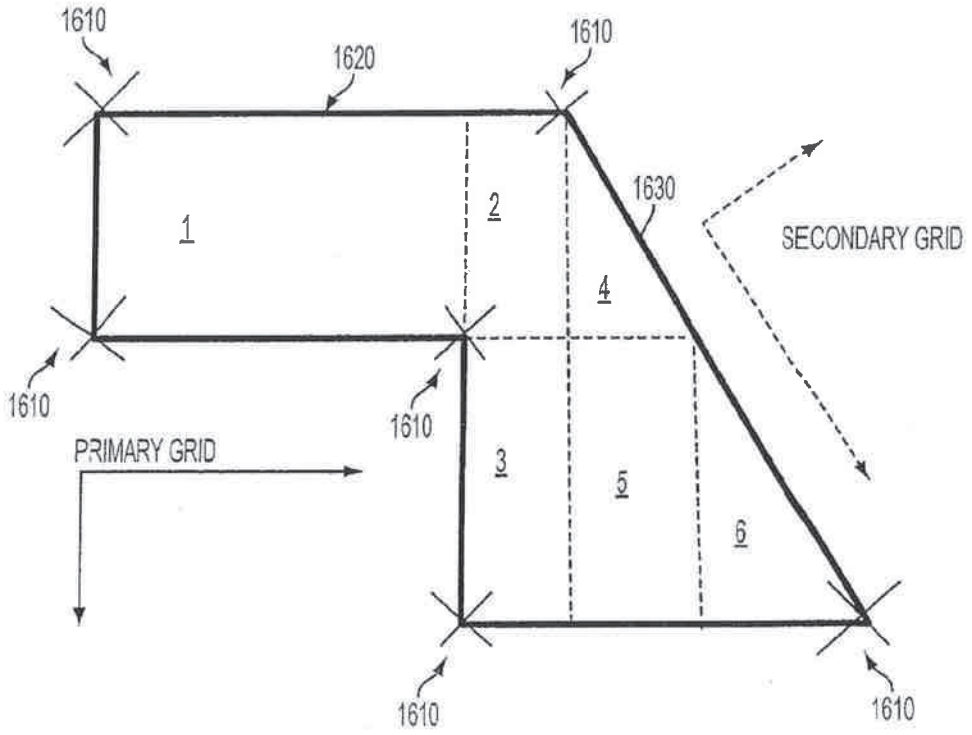
1610
1620
1610
1630
SECONDARY GRID
1
2
4
1610
1610
PRIMARY GRID
3
5
6
1610
1610

FIG. 16

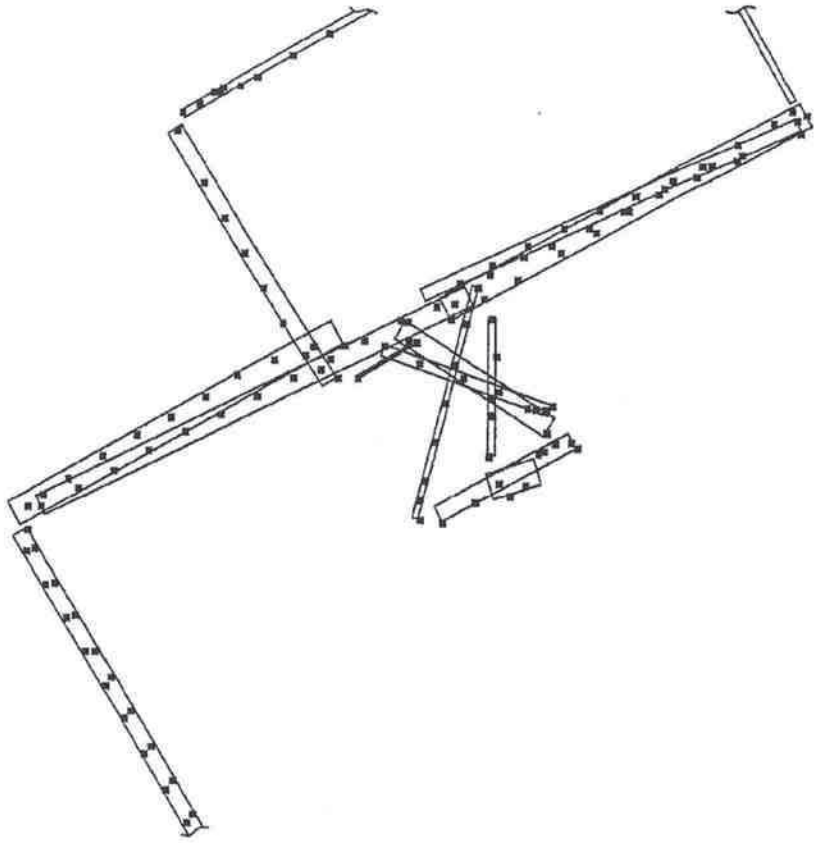

FIG. 17

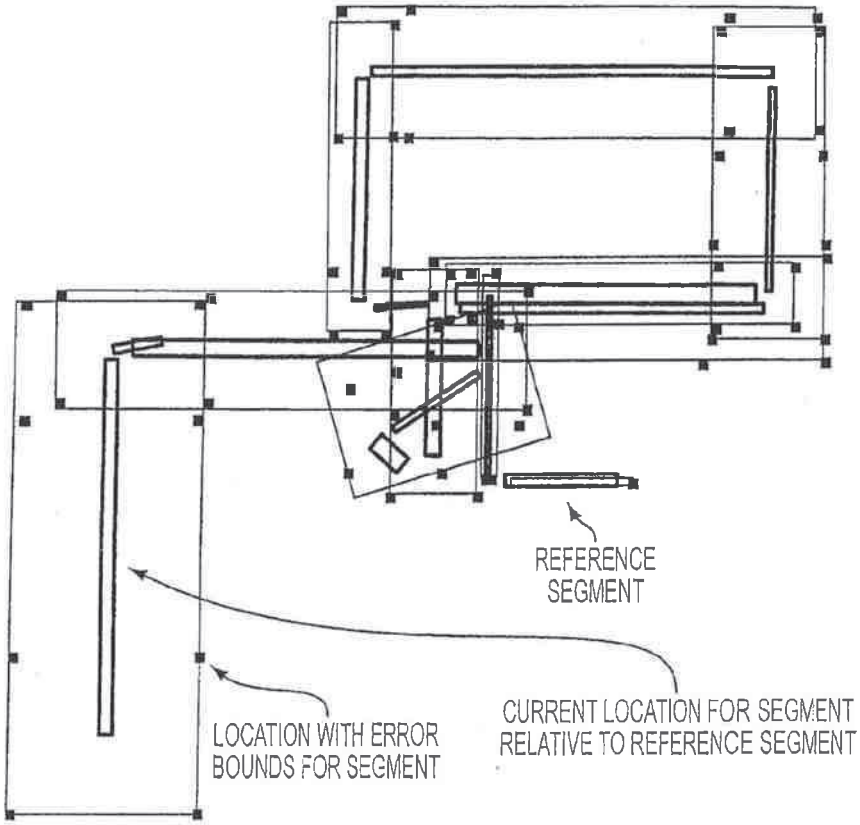
REFERENCE SEGMENT
CURRENT LOCATION FOR SEGMENT RELATIVE TO REFERENCE SEGMENT
LOCATION WITH ERROR BOUNDS FOR SEGMENT

FIG. 18

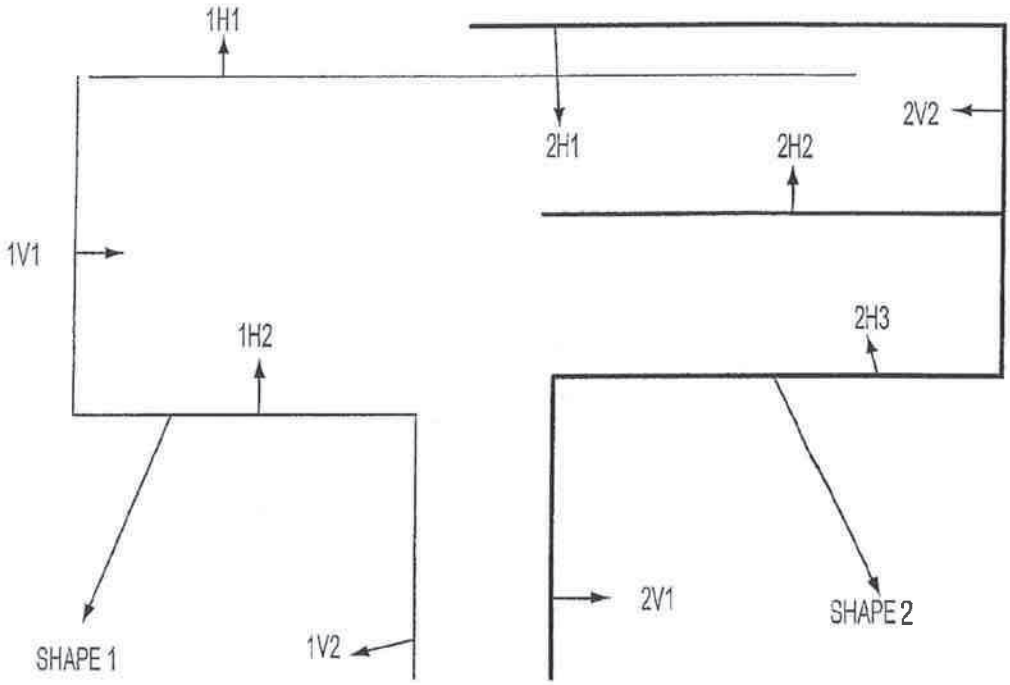

FIG. 19A

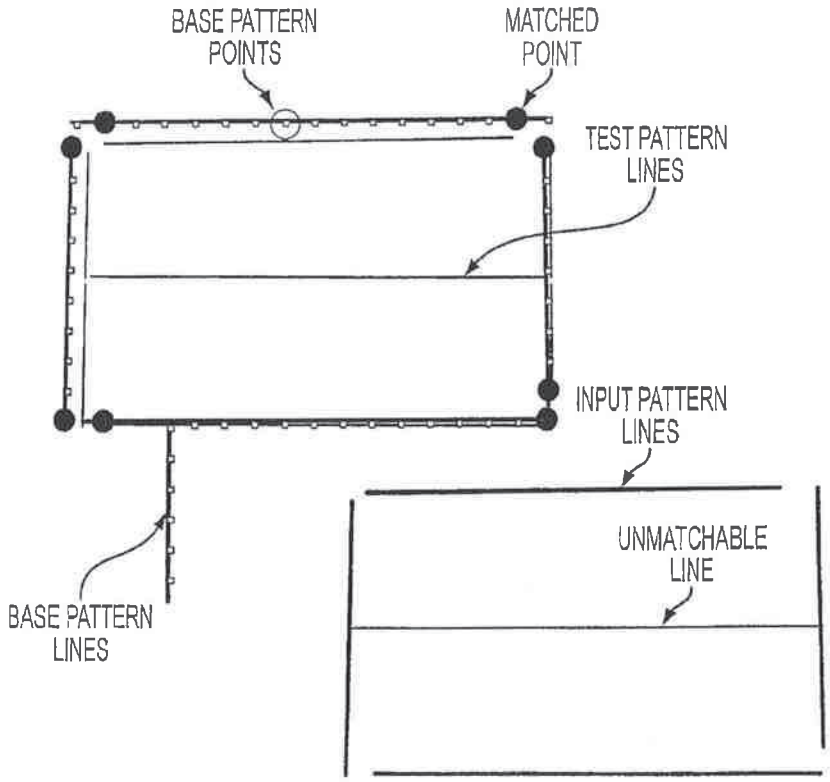
BASE PATTERN POINTS
MATCHED POINT
TEST PATTERN LINES
INPUT PATTERN LINES
UNMATCHABLE LINE
BASE PATTERN LINES

FIG. 19B

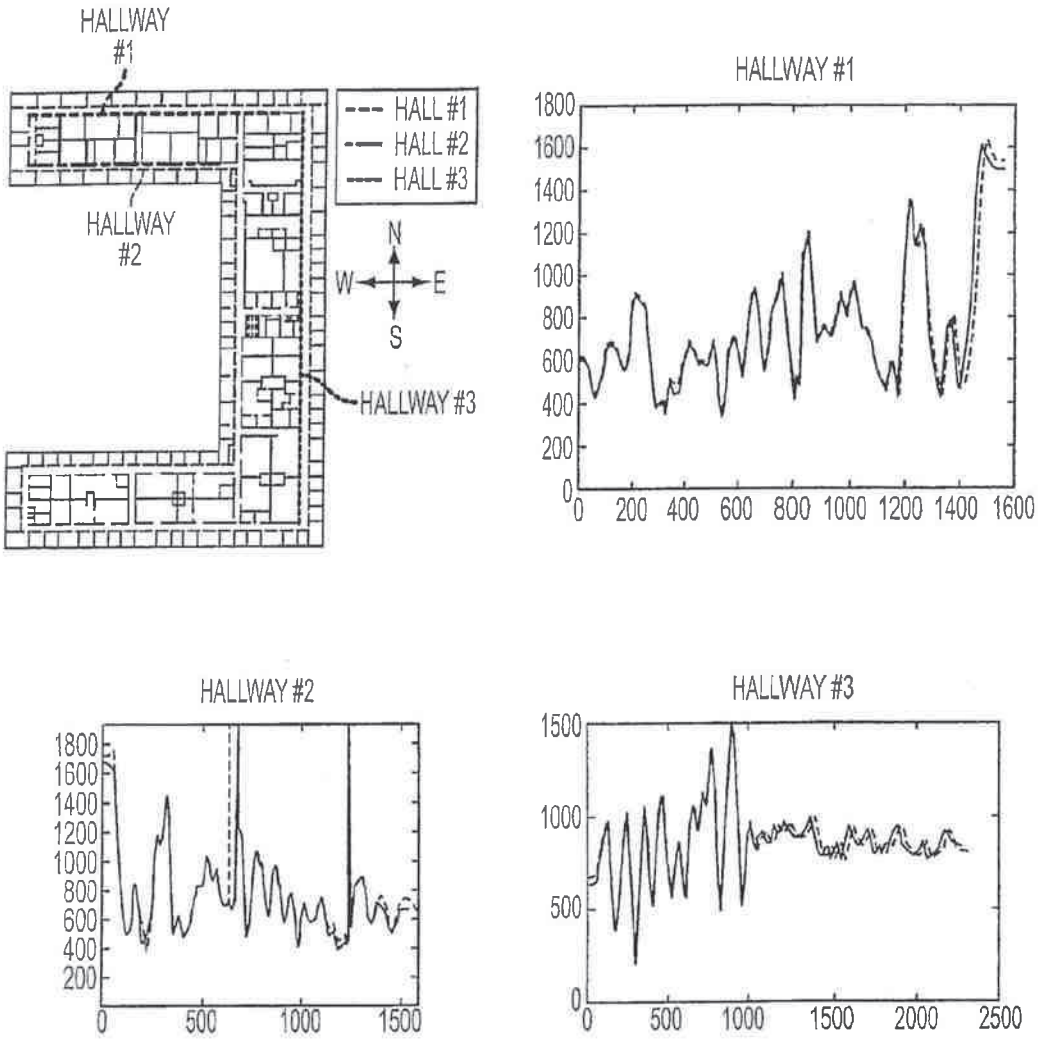
HALLWAY #1
HALLWAY #2
HALLWAY #3
HALL #1
HALL #2
HALL #3
N
W
E
S
HALLWAY #1
HALLWAY #2
HALLWAY #3

FIG. 20A

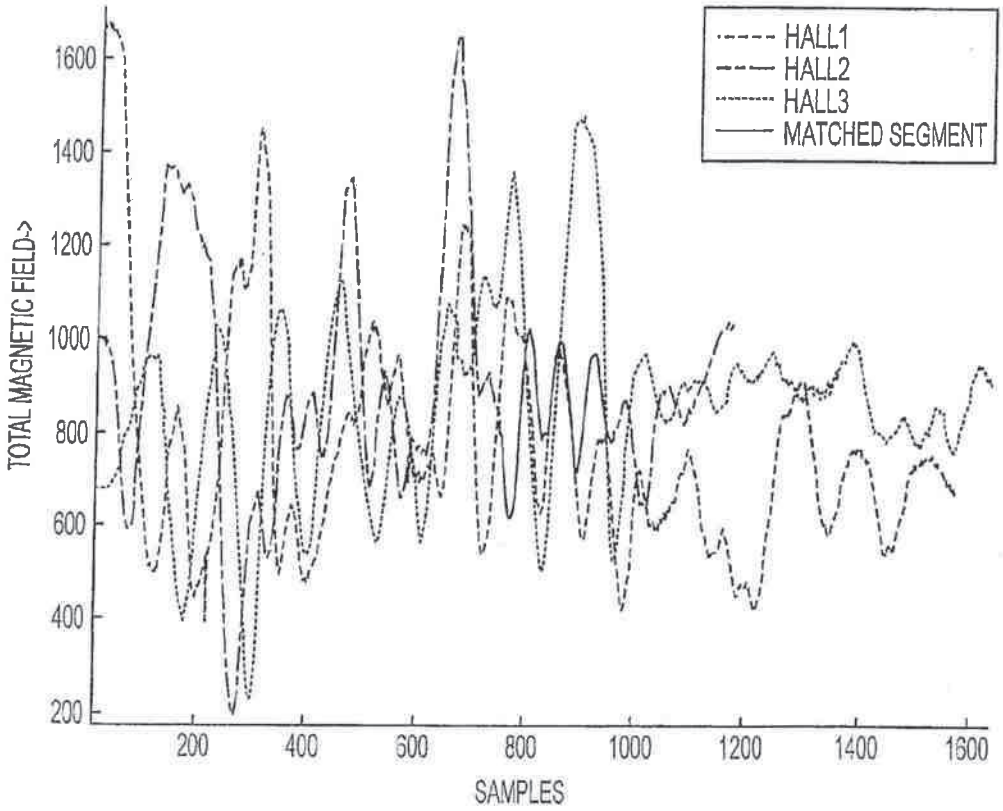
HALL1
HALL2
HALL3
MATCHED SEGMENT
TOTAL MAGNETIC FIELD->
SAMPLES
200
400
600
800
1000
1200
1400
1600

FIG. 20B

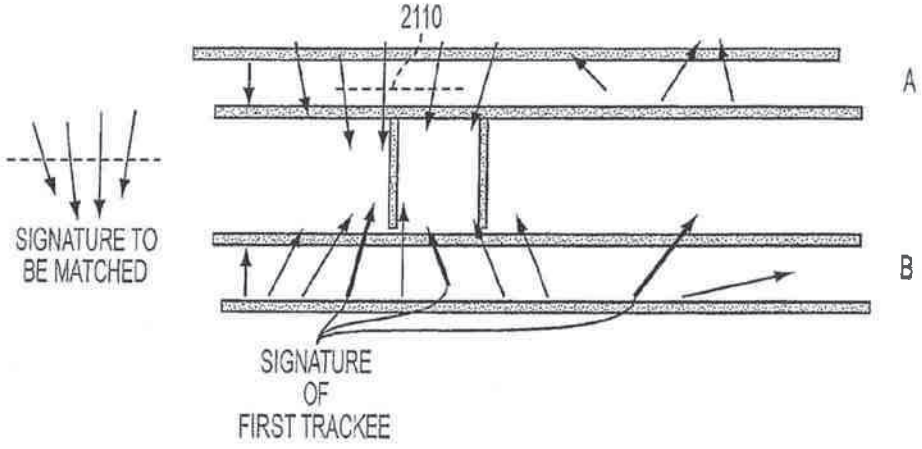

FIG. 21

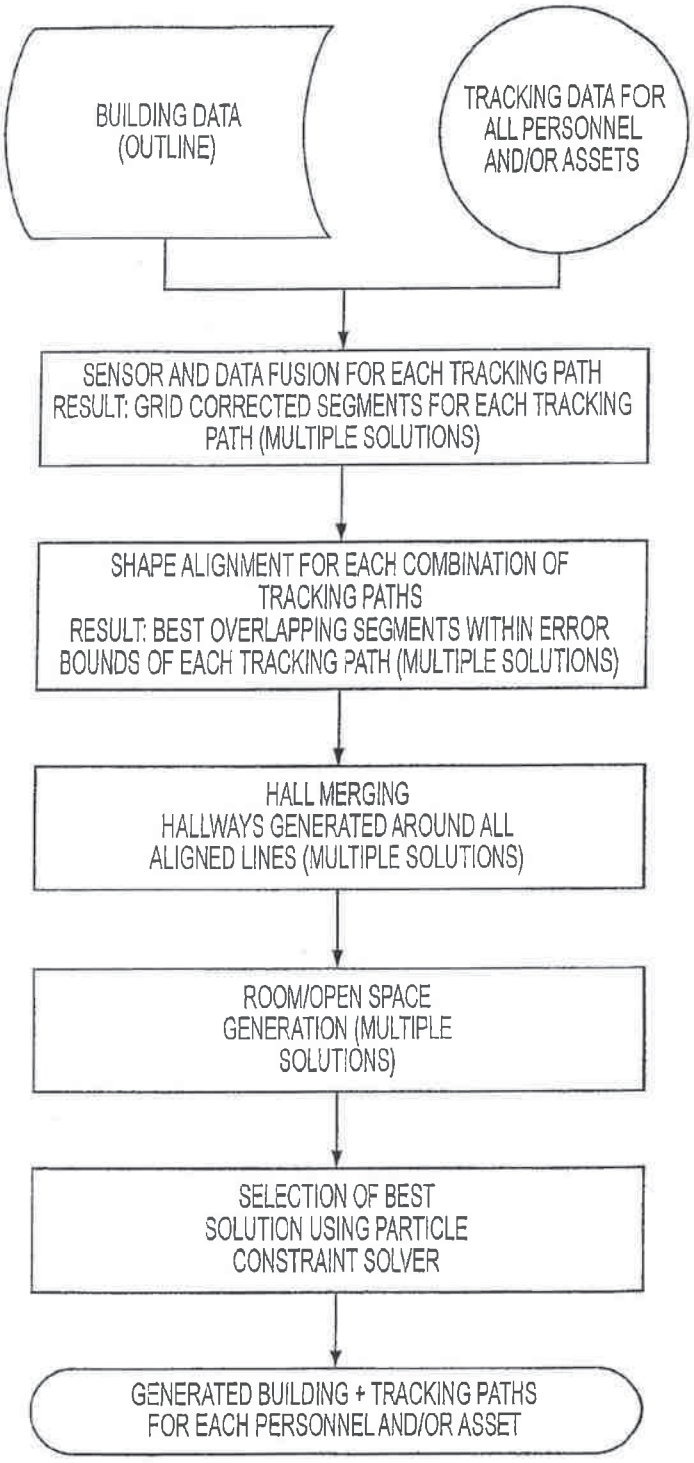
BUILDING DATA (OUTLINE)
TRACKING DATA FOR ALL PERSONNEL AND/OR ASSETS
SENSOR AND DATA FUSION FOR EACH TRACKING PATH RESULT: GRID CORRECTED SEGMENTS FOR EACH TRACKING PATH (MULTIPLE SOLUTIONS)
SHAPE ALIGNMENT FOR EACH COMBINATION OF TRACKING PATHS RESULT: BEST OVERLAPPING SEGMENTS WITHIN ERROR BOUNDS OF EACH TRACKING PATH (MULTIPLE SOLUTIONS)
HALL MERGING HALLWAYS GENERATED AROUND ALL ALIGNED LINES (MULTIPLE SOLUTIONS)
ROOM/OPEN SPACE GENERATION (MULTIPLE SOLUTIONS)
SELECTION OF BEST SOLUTION USING PARTICLE CONSTRAINT SOLVER
GENERATED BUILDING + TRACKING PATHS FOR EACH PERSONNEL AND/OR ASSET

FIG. 22

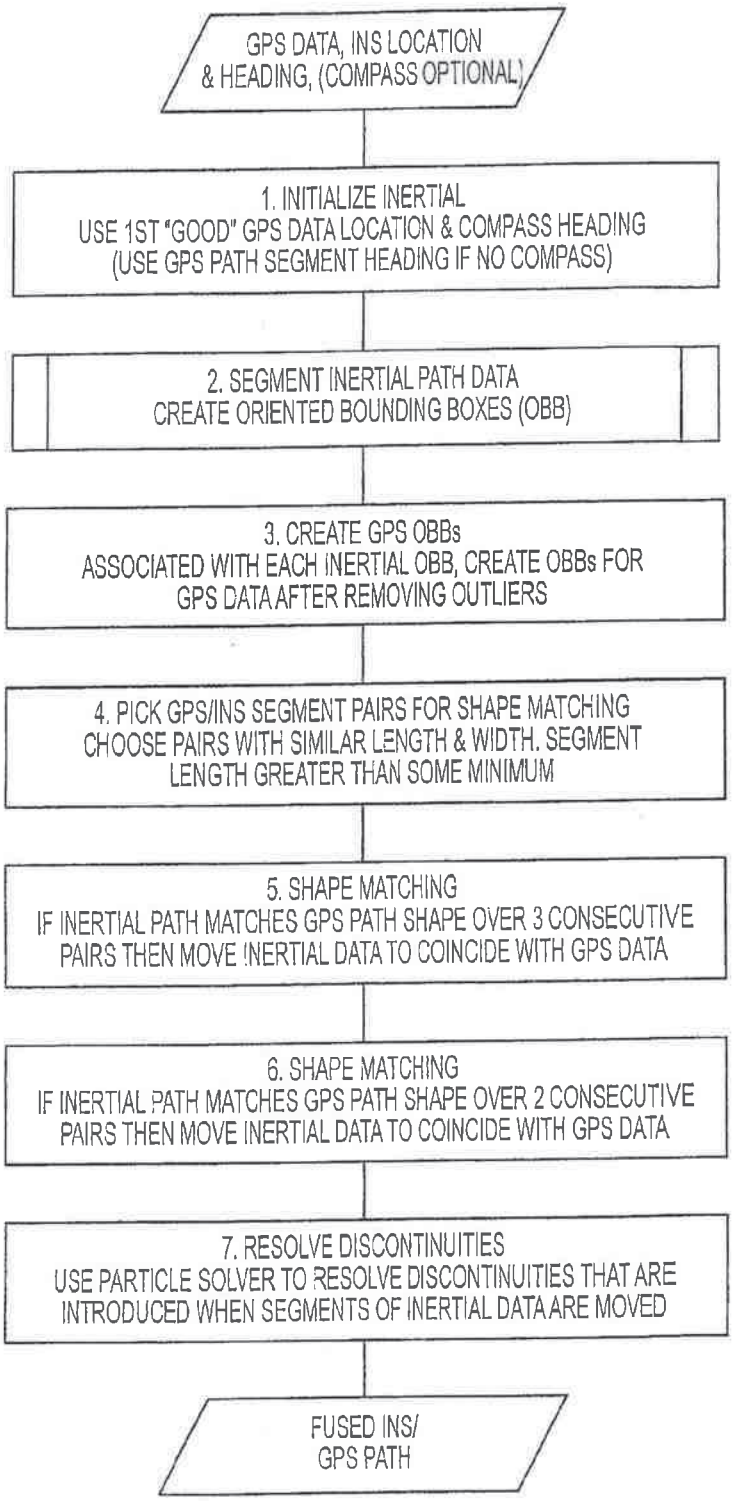

FIG. 23

REPLACEMENT SHEET

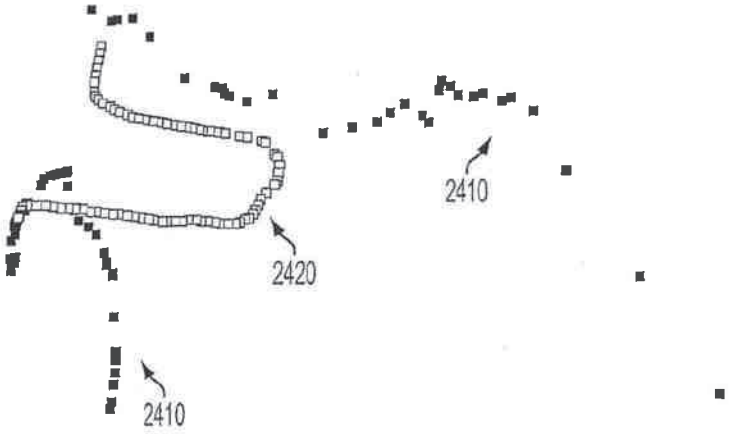

FIG. 24

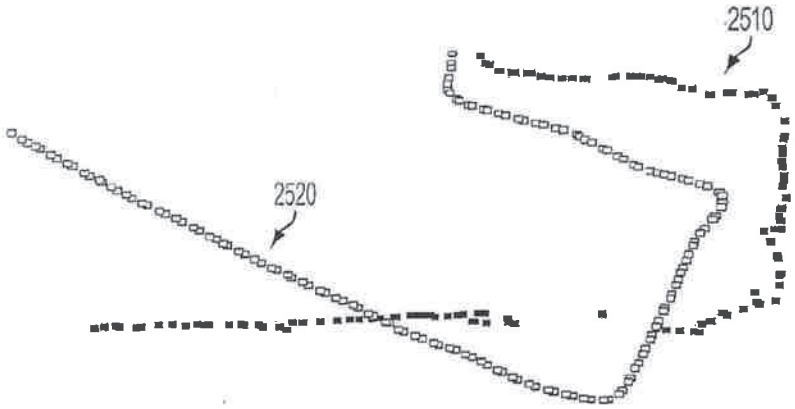

FIG. 25

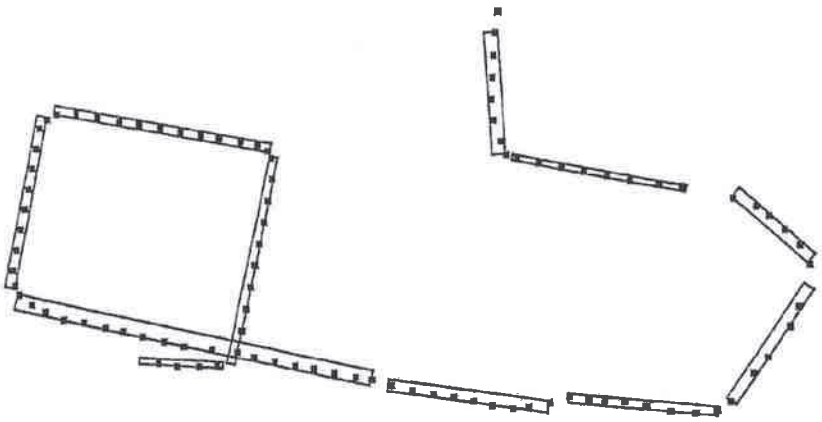

FIG. 26

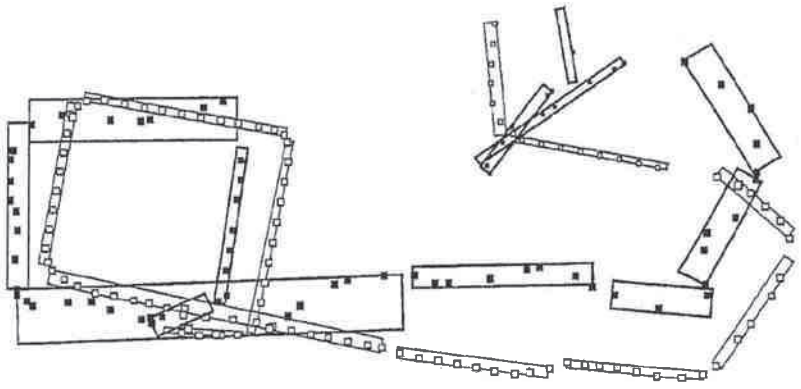

FIG. 27

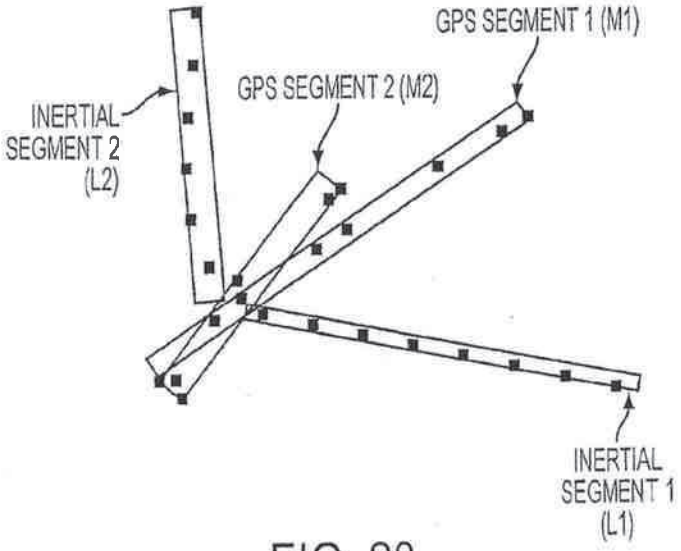
GPS SEGMENT 1 (M1)
GPS SEGMENT 2 (M2)
INERTIAL SEGMENT 2 (L2)
INERTIAL SEGMENT 1 (L1)

FIG. 28



FIG. 29

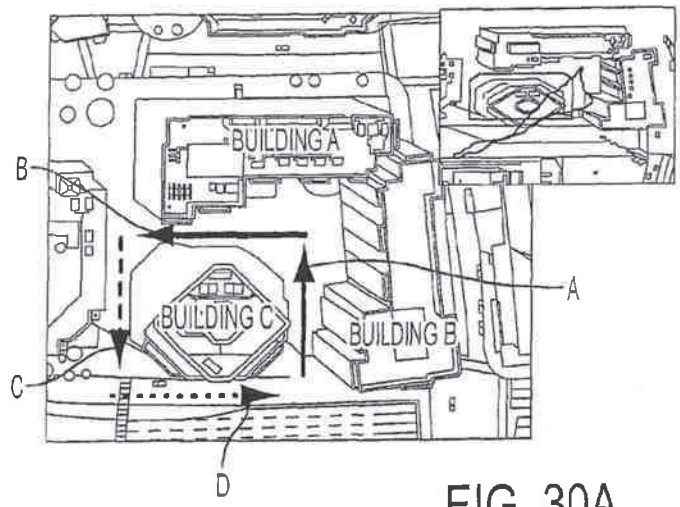

FIG. 30A

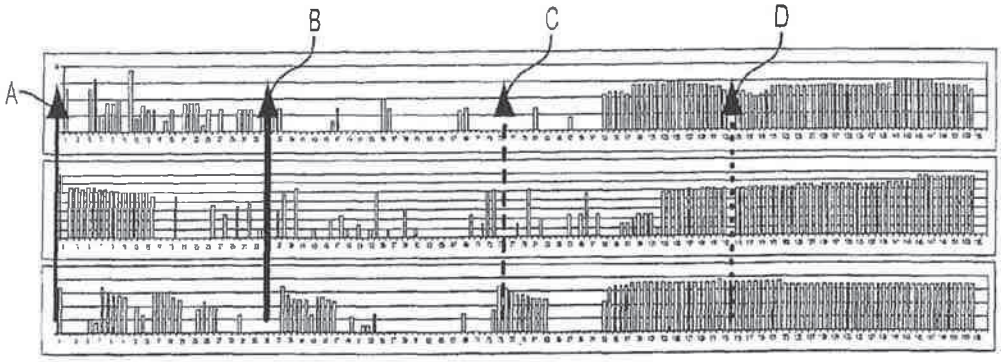

FIG. 30B

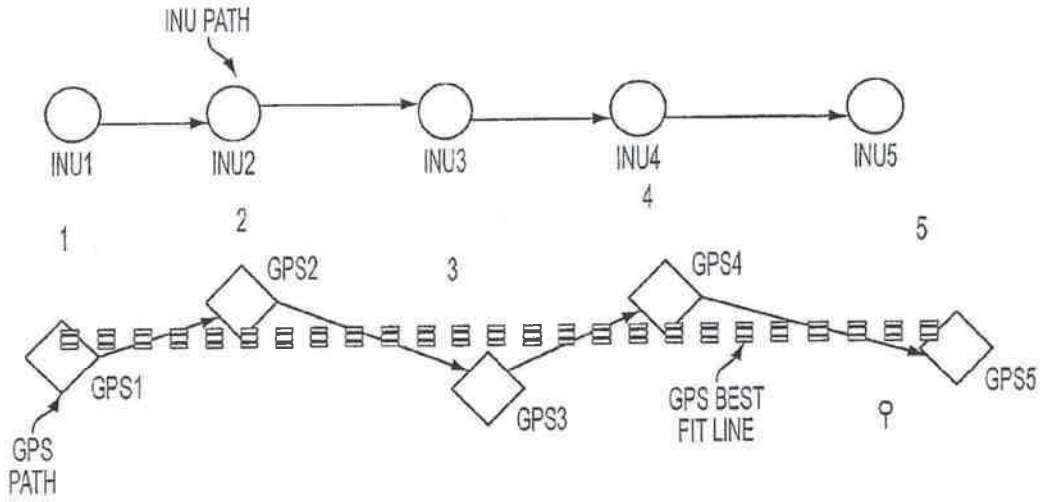
INU PATH
INU1
INU2
INU3
INU4
INU5
1
2
3
4
5
GPS2
GPS4
GPS1
GPS3
GPS5
GPS BEST FIT LINE
GPS PATH

FIG. 31