(12) INTERNATIONAL APPLICATION PUBLISHED UNDER THE PATENT COOPERATION TREATY (PCT)

(19) World Intellectual Property Organization
International Bureau

(43) International Publication Date
28 December 2000 (28.12.2000)

PCT

(10) International Publication Number
WO 00/79223 A2

(51) International Patent Classification[7]: G01F 11/22

(21) International Application Number: PCT/NL00/00427

(22) International Filing Date: 20 June 2000 (20.06.2000)

(25) Filing Language: English

(26) Publication Language: English

(30) Priority Data:

1012395	21 June 1999 (21.06.1999)	NL
1013392	26 October 1999 (26.10.1999)	NL
1013393	26 October 1999 (26.10.1999)	NL

(71) Applicant *(for all designated States except US)*: SARA LEE/DE N.V. [NL/NL]; Keulsekade 143, NL-3532 AA Utrecht (NL).

(72) Inventors; and

(75) Inventors/Applicants *(for US only)*: BRAMER, Albertus, Maria [NL/NL]; Schaarland 10, NL-5663 JR Geldrop (NL). D'HOND, Paul, Isodore [NL/NL]; Berlijnseplein 47, NL-3332 SB Zwijndrecht (NL).

(74) Agent: PRINS, A., W.; Vereenigde, Nieuwe Parklaan 97, NL-2587 BN The Hague (NL).

(81) Designated States *(national)*: AE, AG, AL, AM, AT, AU, AZ, BA, BB, BG, BR, BY, BZ, CA, CH, CN, CR, CU, CZ, DE, DK, DM, DZ, EE, ES, FI, GB, GD, GE, GH, GM, HR, HU, ID, IL, IN, IS, JP, KE, KG, KP, KR, KZ, LC, LK, LR, LS, LT, LU, LV, MA, MD, MG, MK, MN, MW, MX, MZ, NO, NZ, PL, PT, RO, RU, SD, SE, SG, SI, SK, SL, TJ, TM, TR, TT, TZ, UA, UG, US, UZ, VN, YU, ZA, ZW.

(84) Designated States *(regional)*: ARIPO patent (GH, GM, KE, LS, MW, MZ, SD, SL, SZ, TZ, UG, ZW), Eurasian

[Continued on next page]

(54) Title: DOSING DEVICE ADAPTED FOR DISPENSING A CONCENTRATE FROM A HOLDER IN A METERED MANNER

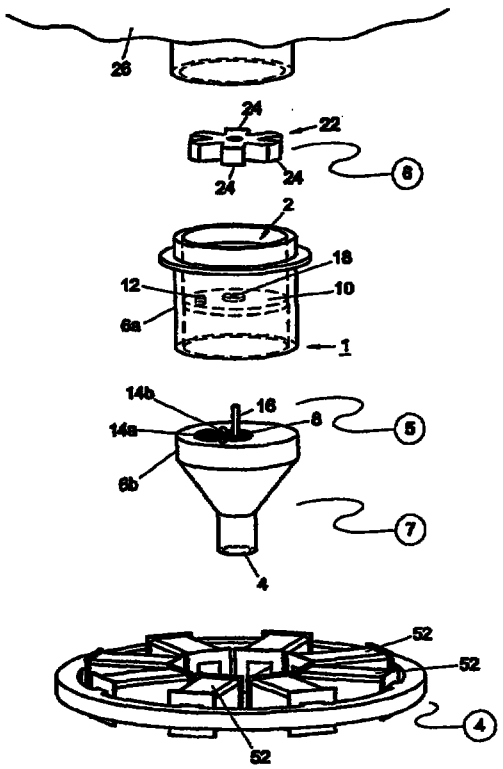

(57) Abstract: The invention relates to a dosing device comprising a housing comprising at least one inlet, at least one outlet, and a liquid flow path extending from the inlet to the outlet. The dosing device is adapted for dispensing in a metered manner a viscous concentrate from a holder. The concentrate in diluted condition forms a beverage suitable for consumption. The dosing device is adapted to be connected, in use, to a storage space of the holder. According to the invention, the dosing device comprises a gear pump to be included in the liquid flow path, which gear pump can be driven in particular by a rotor located upstream of the gear pump, by means of changing magnetic fields.

WO 00/79223 A2



patent (AM, AZ, BY, KG, KZ, MD, RU, TJ, TM), European patent (AT, BE, CH, CY, DE, DK, ES, FI, FR, GB, GR, IE, IT, LU, MC, NL, PT, SE), OAPI patent (BF, BJ, CF, CG, CI, CM, GA, GN, GW, ML, MR, NE, SN, TD, TG).

Published:

— *Without international search report and to be republished upon receipt of that report.*

For two-letter codes and other abbreviations, refer to the "Guidance Notes on Codes and Abbreviations" appearing at the beginning of each regular issue of the PCT Gazette.