WO 2026/186974 PCT/KR2025/013951

[도1]

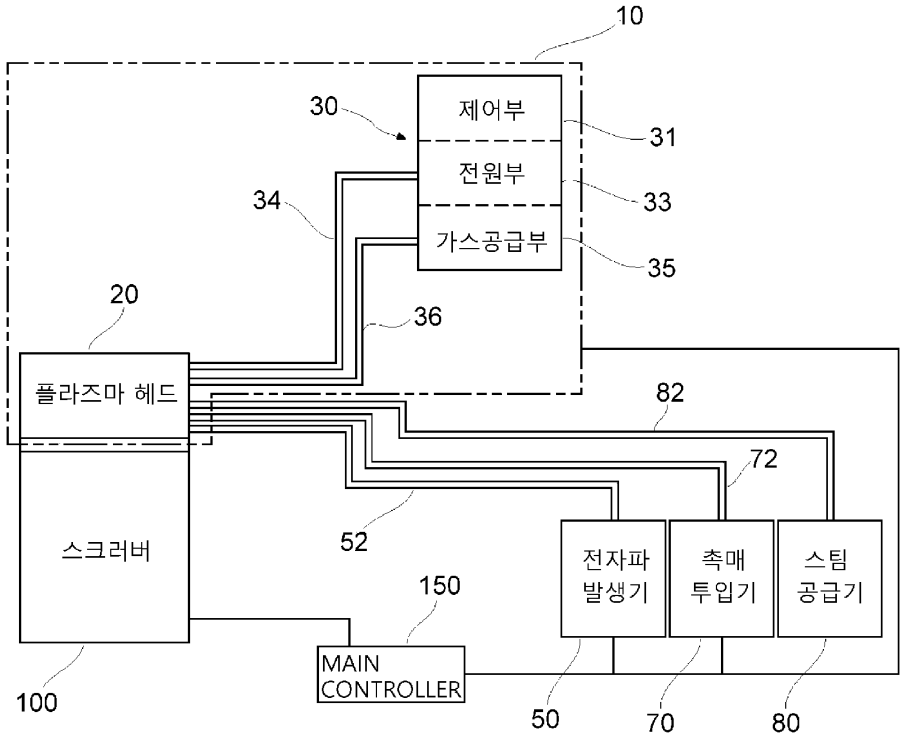

[도2]

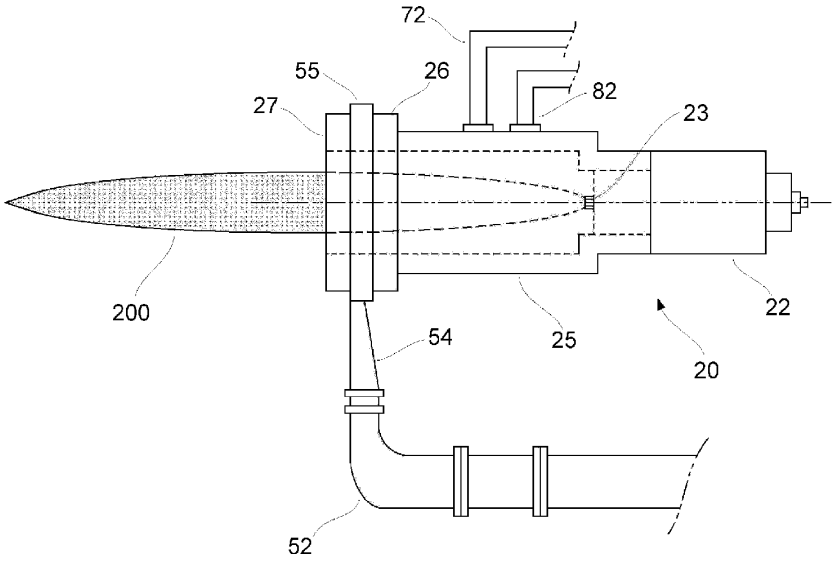

[도3]

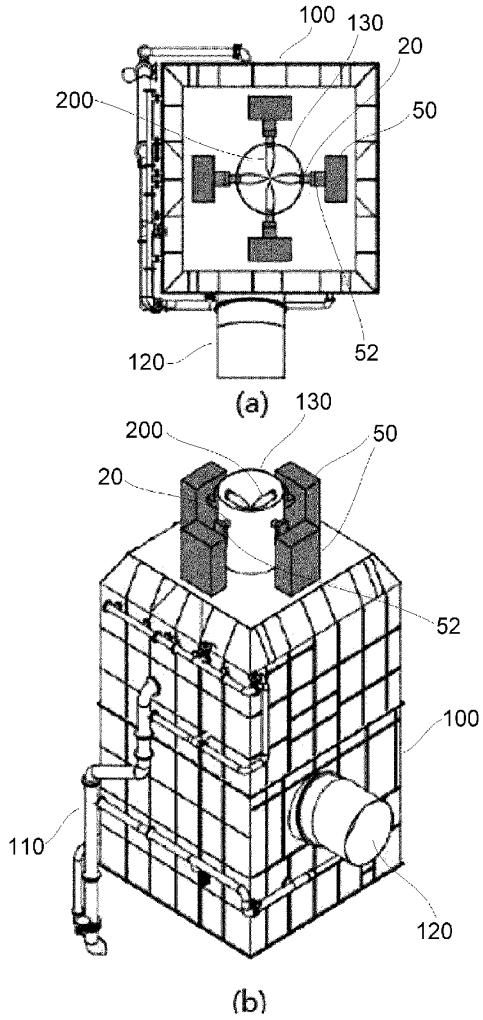

[도4]

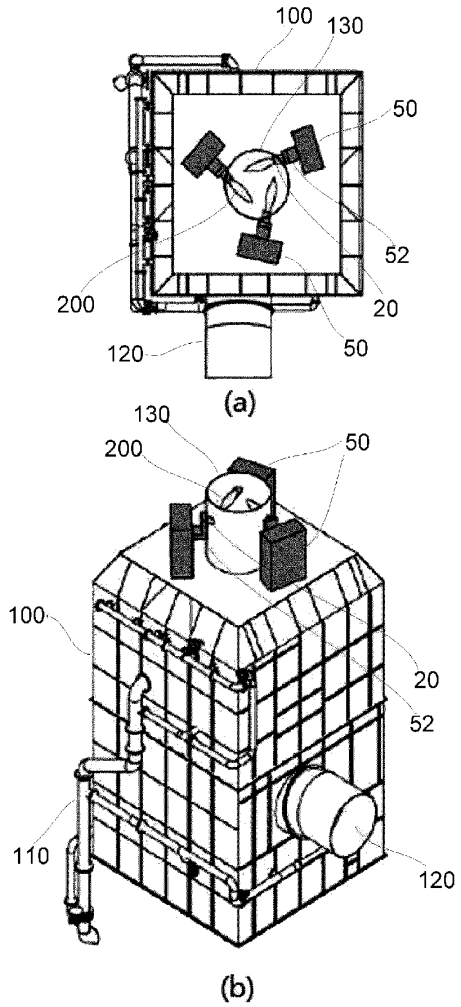
100
130
50
52
200
20
120
50
(a)
130
200
50
100
20
52
110
120
(b)

[도5]

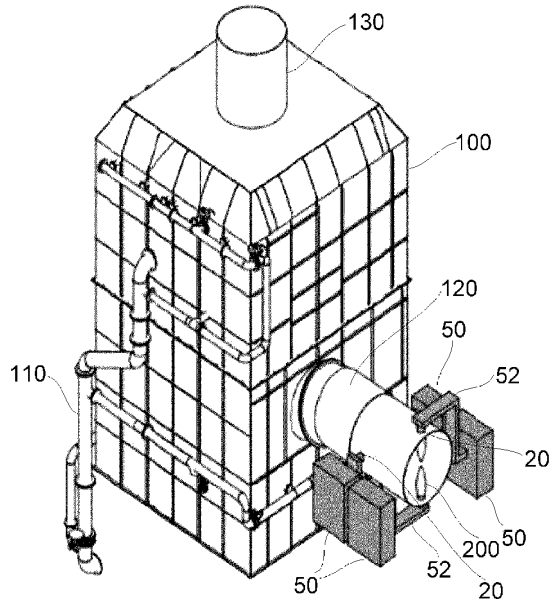
130
100
120
50
110
52
20
200
50
50
52
20

[도6]

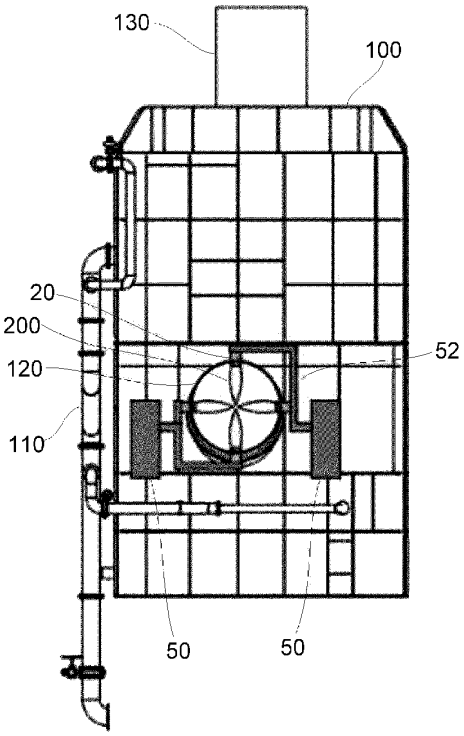

[도7]

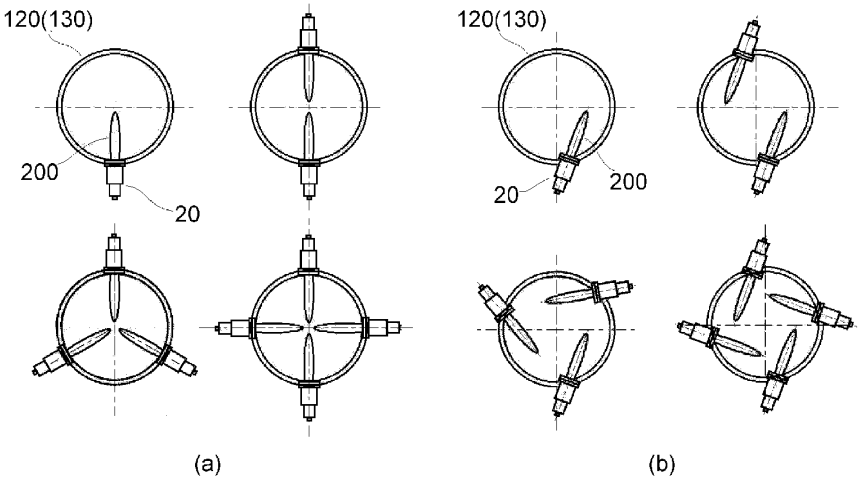

[도8]

