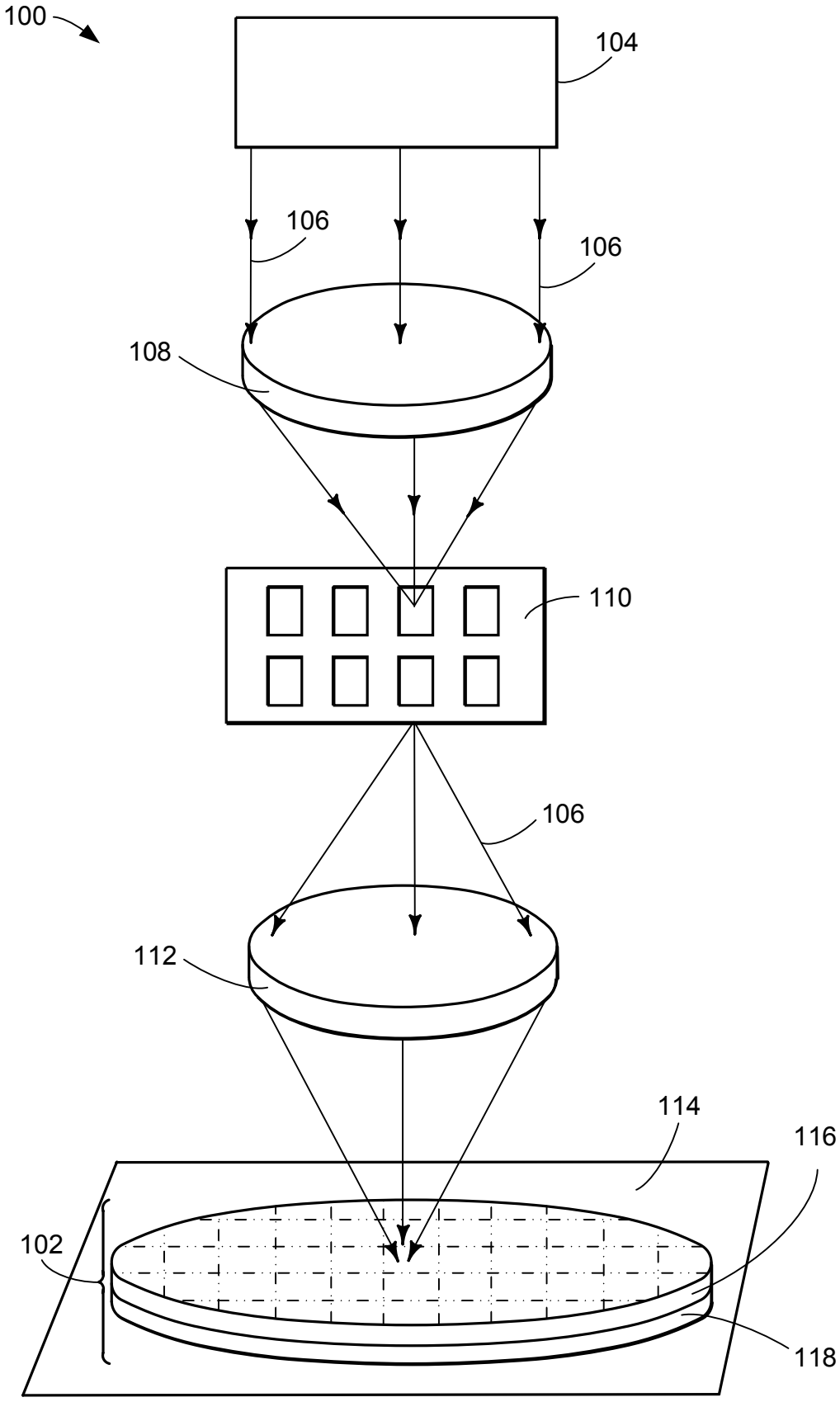

FIG. 1

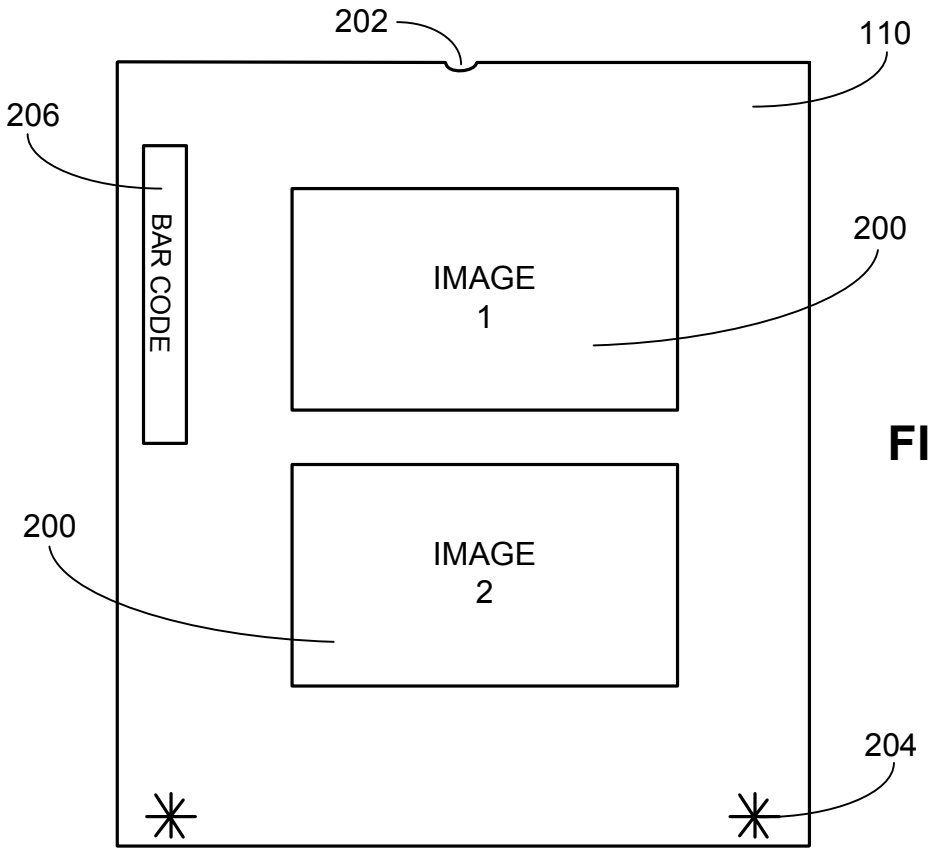
202
110
206
BAR CODE
IMAGE
1
200
200
IMAGE
2
204

FIG. 2

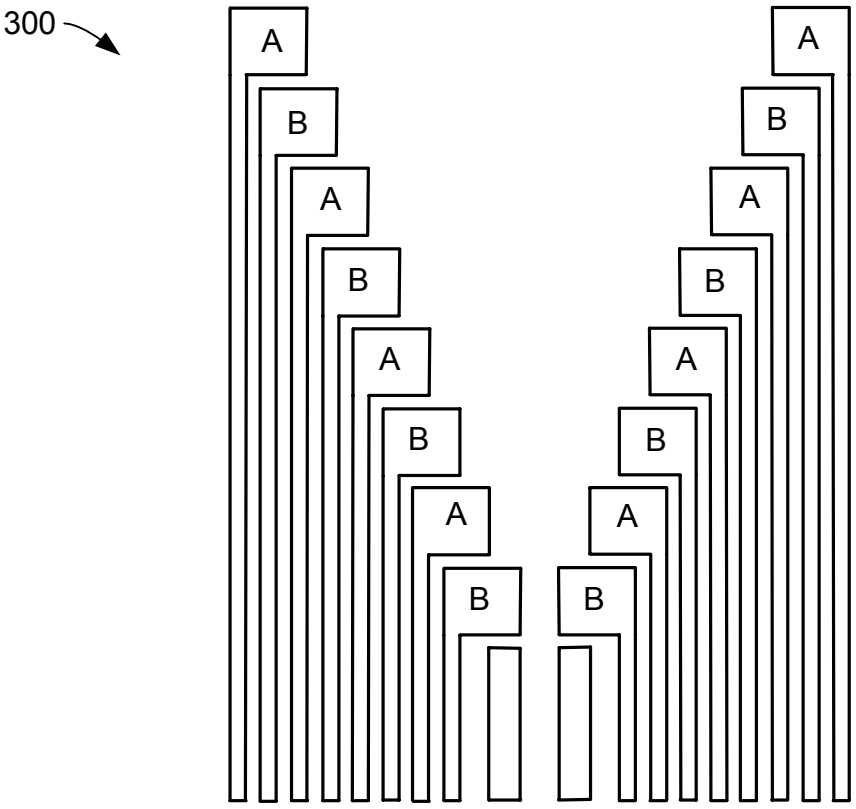
300
A
B
A
B
A
B
A
B
A
B
A
B
A
B
A
B
A
B
A
B

FIG. 3

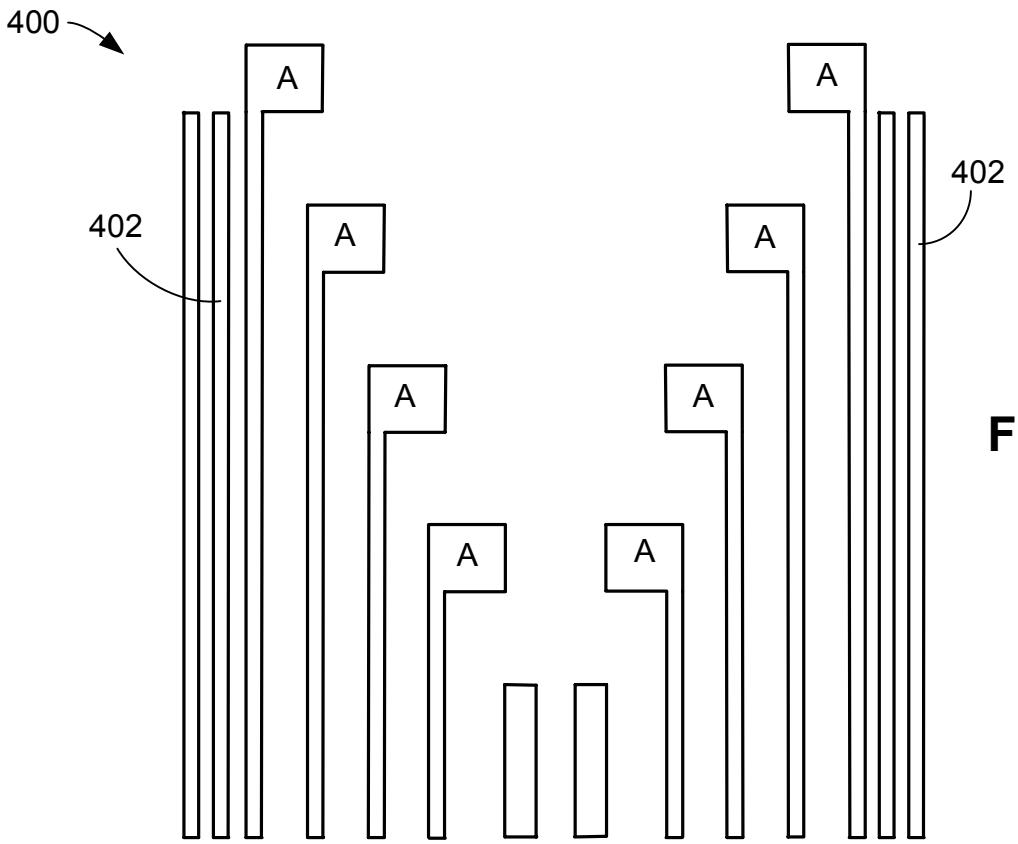

FIG. 4

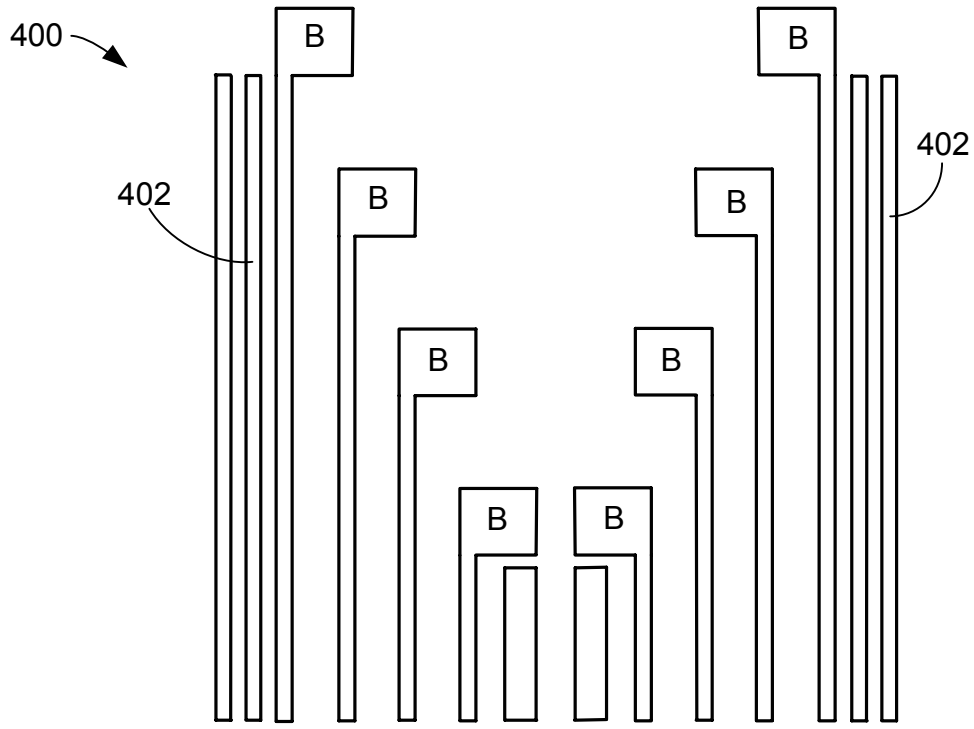

FIG. 5

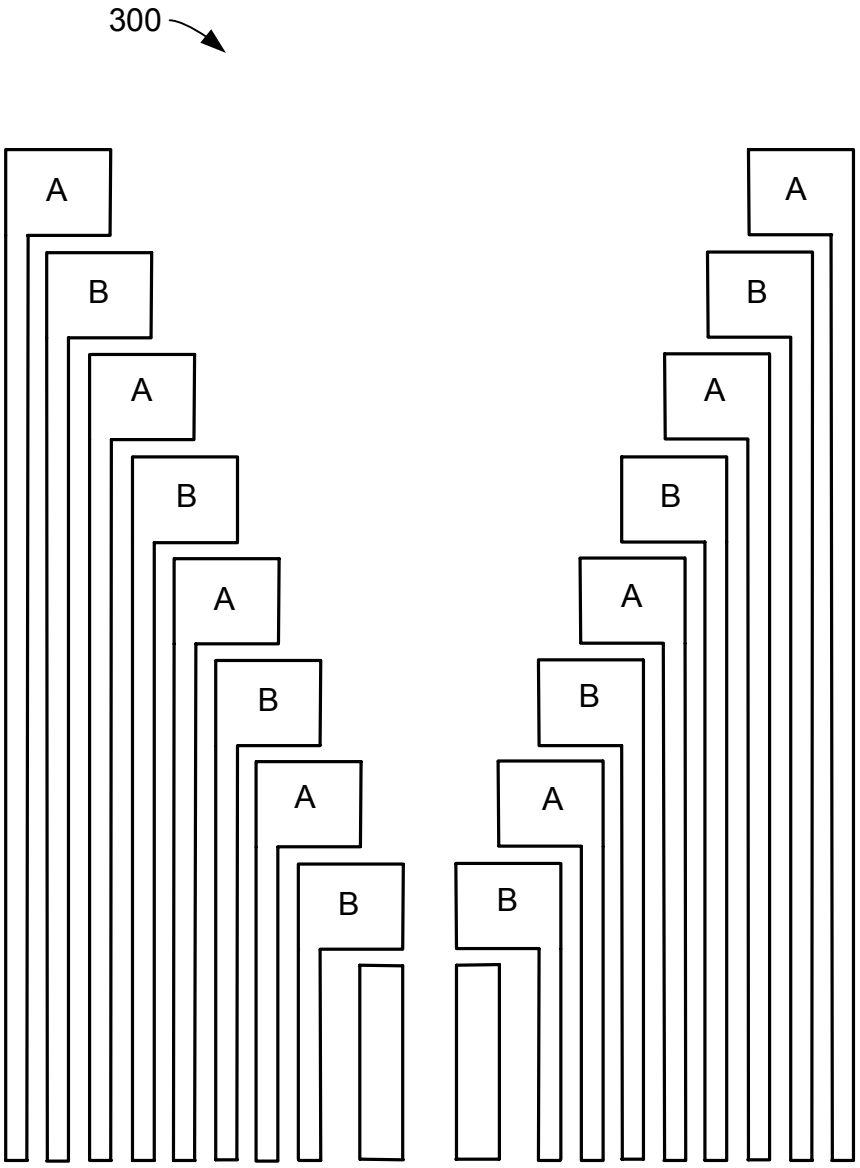

FIG. 6

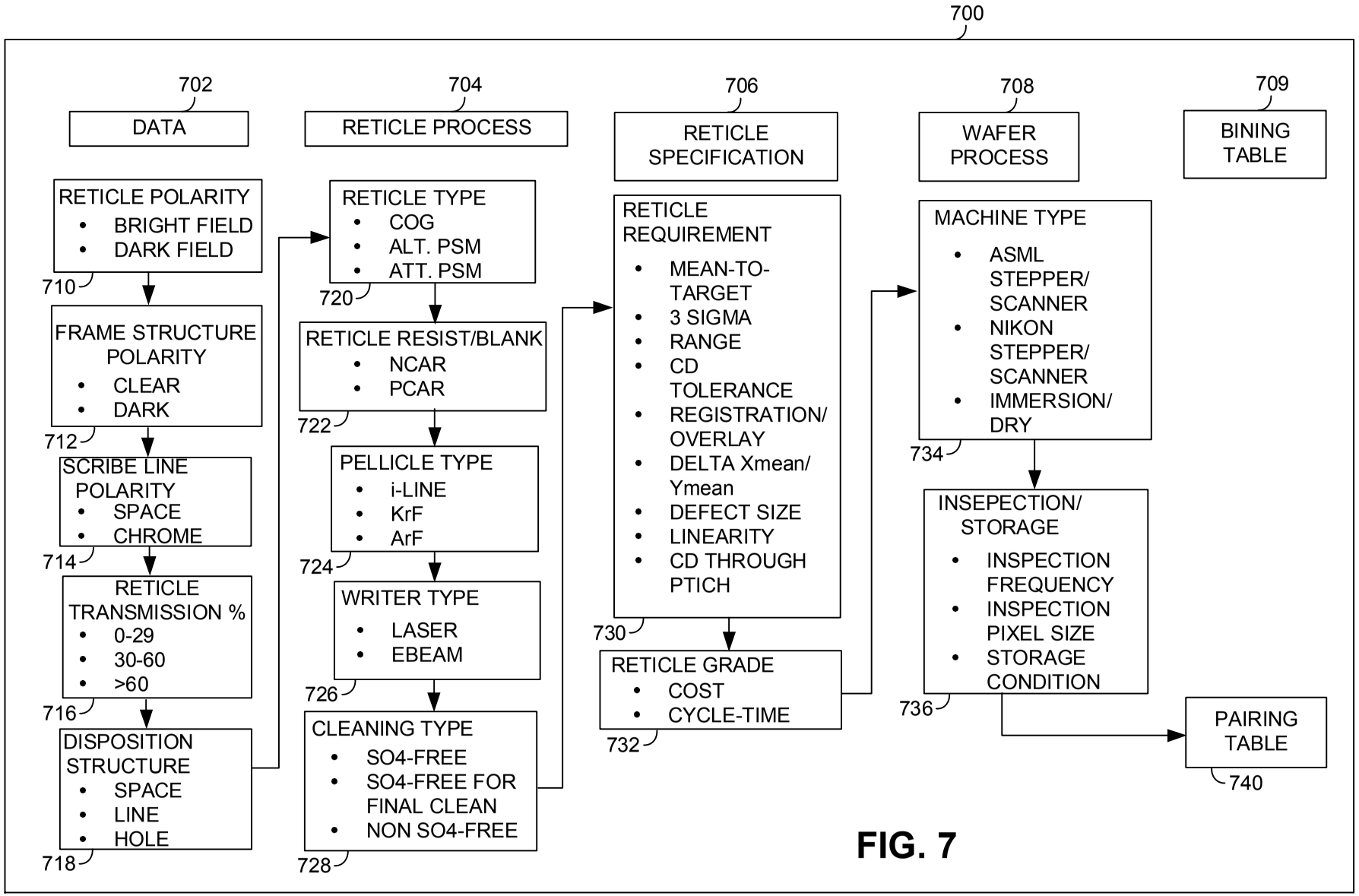
700
702
DATA
704
RETICLE PROCESS
706
RETICLE SPECIFICATION
708
WAFER PROCESS
709
BINING TABLE
RETICLE POLARITY
• BRIGHT FIELD
• DARK FIELD
710
FRAME STRUCTURE POLARITY
• CLEAR
• DARK
712
SCRIBE LINE POLARITY
• SPACE
• CHROME
714
RETICLE TRANSMISSION %
• 0-29
• 30-60
• >60
716
DISPOSITION STRUCTURE
• SPACE
• LINE
• HOLE
718
RETICLE TYPE
• COG
• ALT. PSM
• ATT. PSM
720
RETICLE RESIST/BLANK
• NCAR
• PCAR
722
PELLICLE TYPE
• i-LINE
• KrF
• ArF
724
WRITER TYPE
• LASER
• EBEAM
726
CLEANING TYPE
• SO4-FREE
• SO4-FREE FOR FINAL CLEAN
• NON SO4-FREE
728
RETICLE REQUIREMENT
• MEAN-TO-TARGET
• 3 SIGMA
• RANGE
• CD TOLERANCE
• REGISTRATION/ OVERLAY
• DELTA Xmean/ Ymean
• DEFECT SIZE
• LINEARITY
• CD THROUGH PTICH
730
RETICLE GRADE
• COST
• CYCLE-TIME
732
MACHINE TYPE
• ASML STEPPER/ SCANNER
• NIKON STEPPER/ SCANNER
• IMMERSION/ DRY
734
INSEPECTION/ STORAGE
• INSPECTION FREQUENCY
• INSPECTION PIXEL SIZE
• STORAGE CONDITION
736
PAIRING TABLE
740

FIG. 7

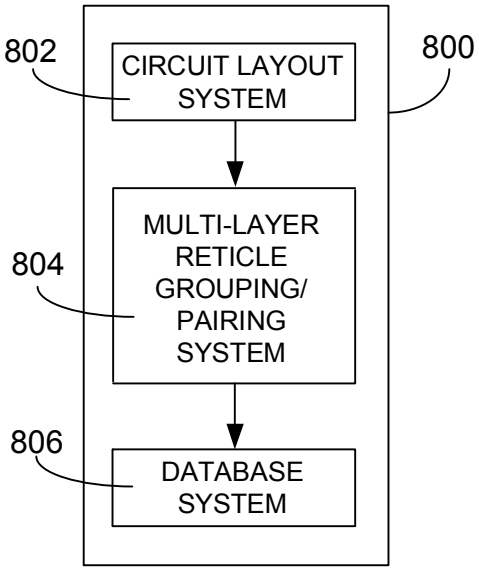

FIG. 8

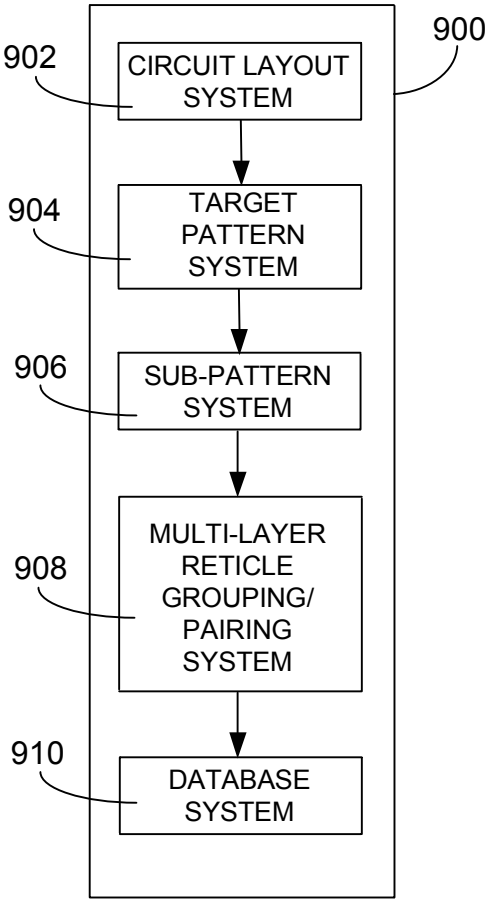

FIG. 9

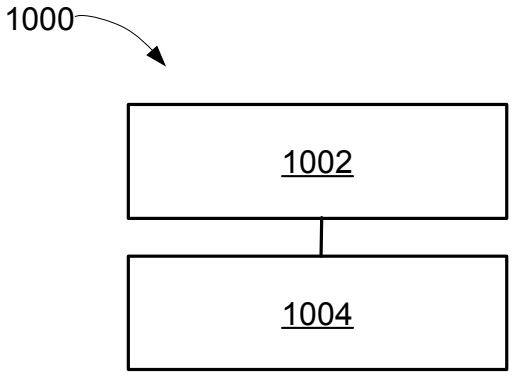

FIG. 10