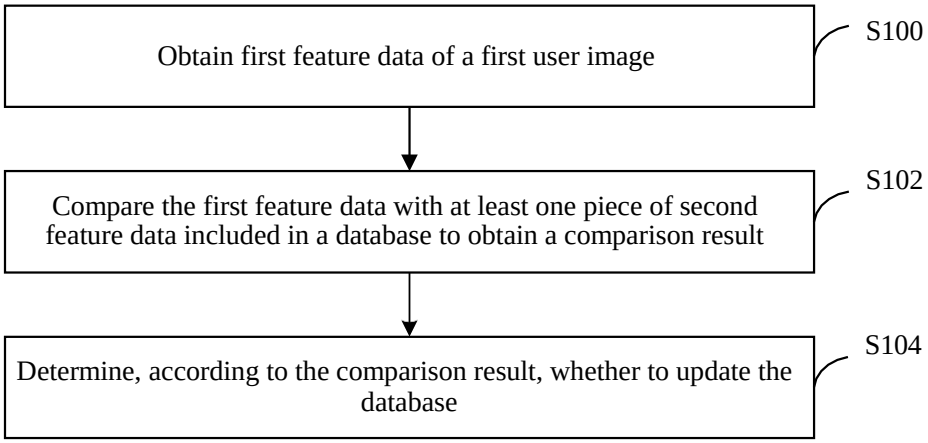

FIG. 1

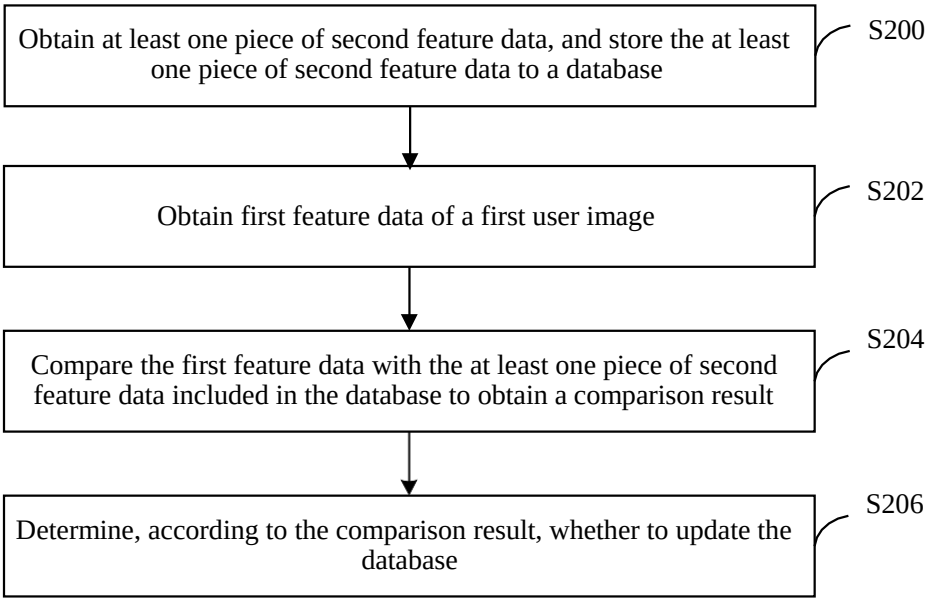

FIG. 2

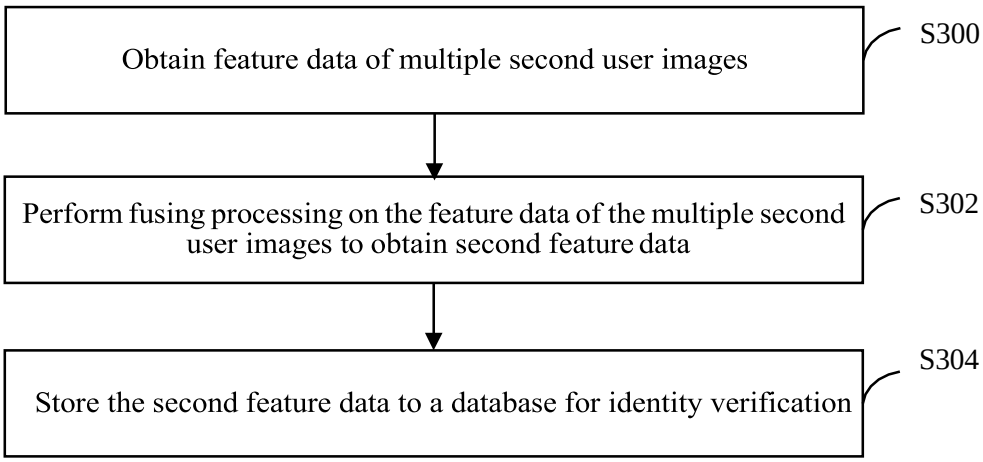

FIG. 3

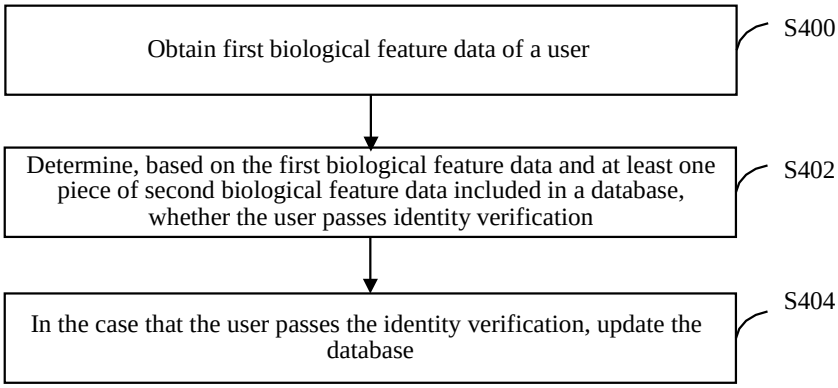

FIG. 4

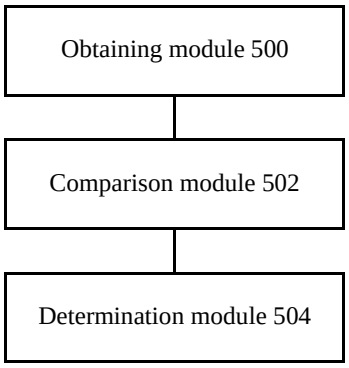

FIG. 5

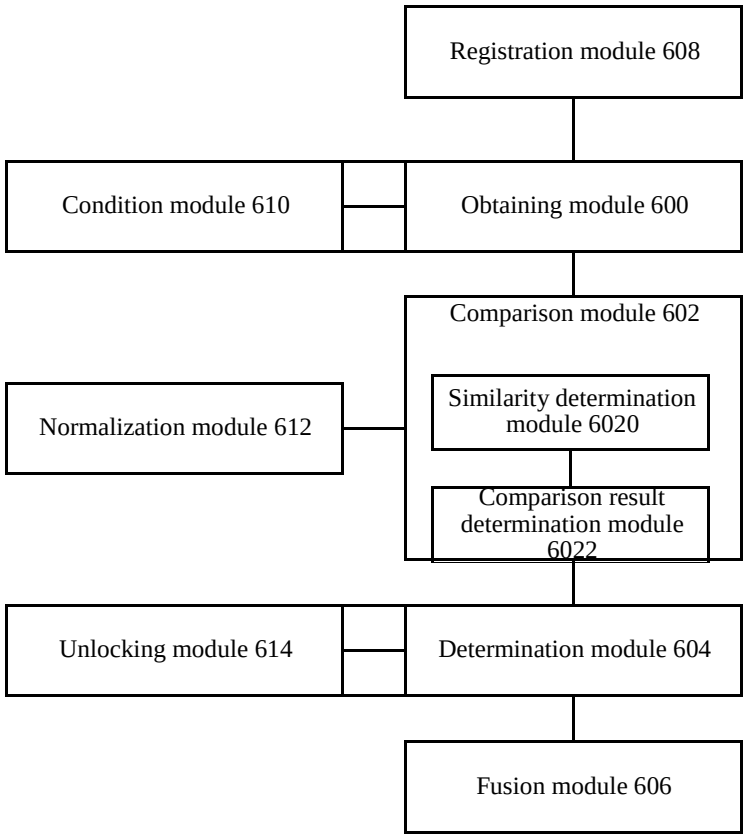

FIG. 6

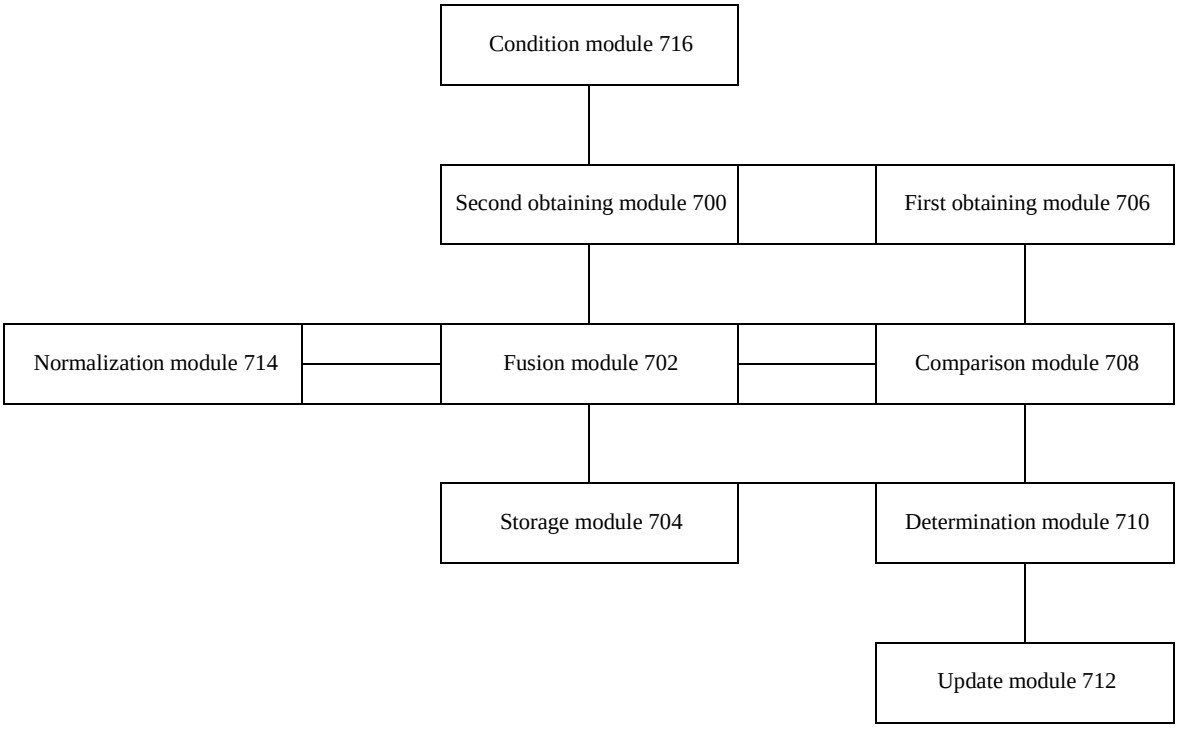
Condition module 716
Second obtaining module 700
First obtaining module 706
Normalization module 714
Fusion module 702
Comparison module 708
Storage module 704
Determination module 710
Update module 712

FIG. 7

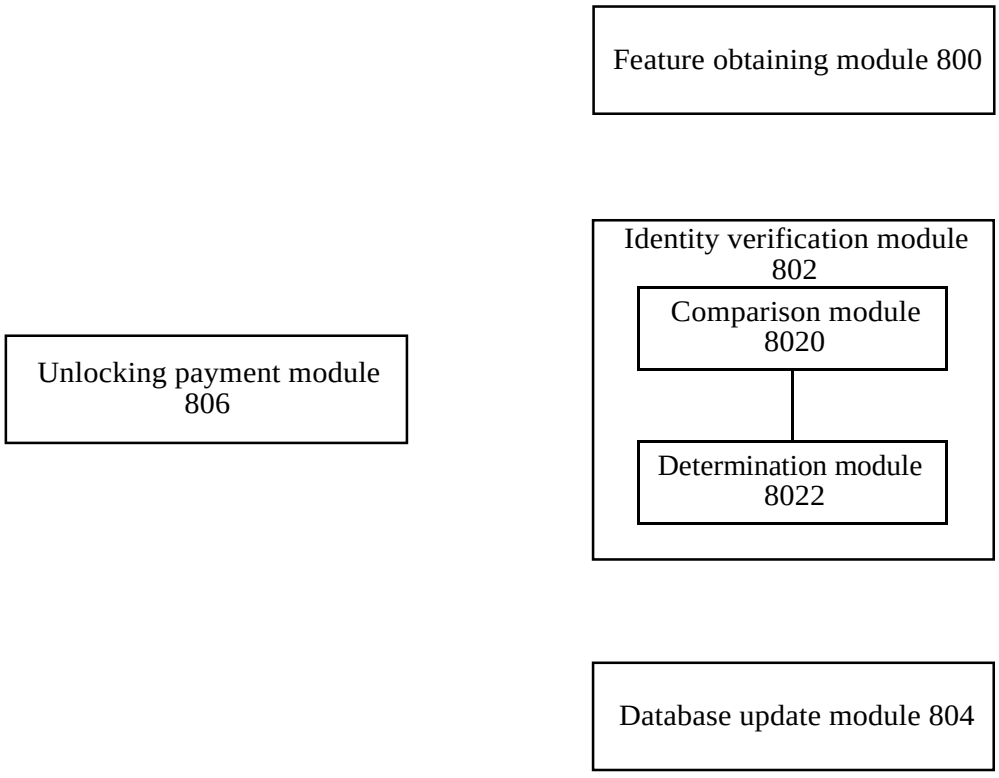
Feature obtaining module 800
Identity verification module 802
Comparison module 8020
Determination module 8022
Unlocking payment module 806
Database update module 804

FIG. 8

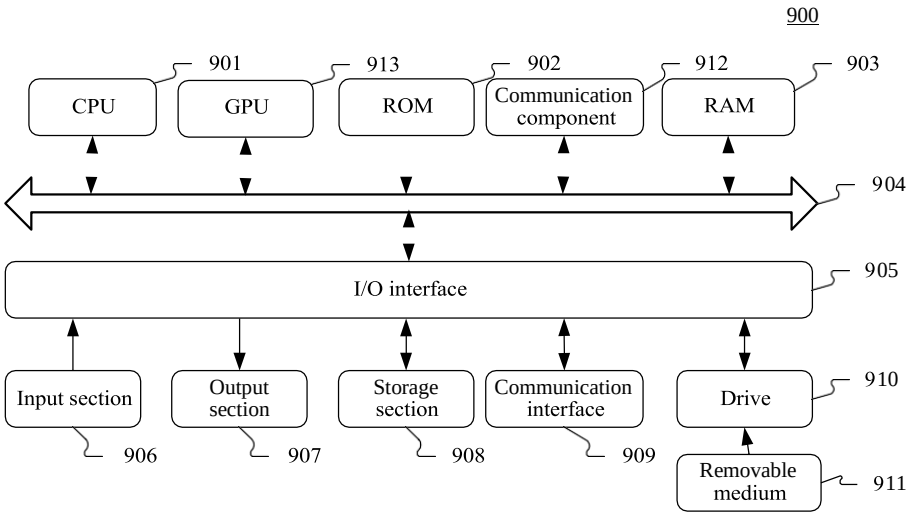

FIG. 9

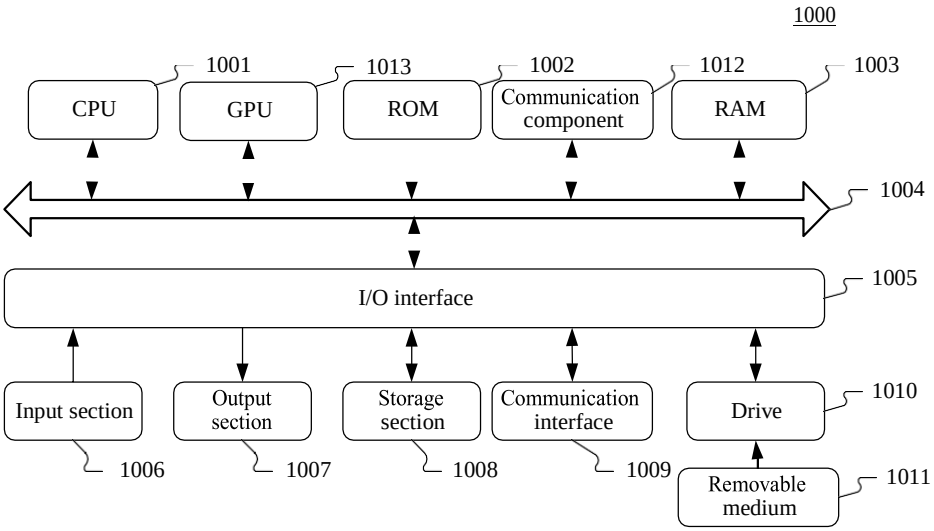

FIG. 10

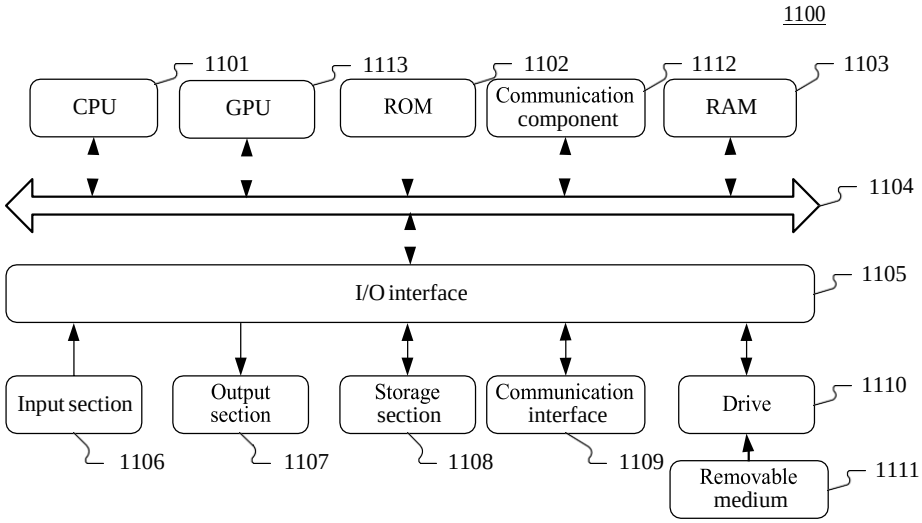

FIG. 11