(12) INTERNATIONAL APPLICATION PUBLISHED UNDER THE PATENT COOPERATION TREATY (PCT)

(19) World Intellectual Property Organization
International Bureau

(43) International Publication Date
21 November 2013 (21.11.2013)

WIPO | PCT

(10) International Publication Number
WO 2013/171738 A1

(51) International Patent Classification:
H04N 5/33 (2006.01) *H04N 5/349* (2011.01)

(21) International Application Number:
PCT/IL2013/050380

(22) International Filing Date:
5 May 2013 (05.05.2013)

(25) Filing Language: English

(26) Publication Language: English

(30) Priority Data:
219773 13 May 2012 (13.05.2012) IL

(71) Applicant: **ELBIT SYSTEMS ELECTRO-OPTICS ELOP LTD.** [IL/IL]; Advanced Technology Park, Kiryat Weizmann, P.O.B 1165, 76111 Rehovot (IL).

(72) Inventors: **NACHUM, Avishay**; 5 Chen Blvd., 76452 Rehovot (IL). **BINDER, Shalom**; 46 Hapardes Harishon St., 7520928 Rishon Le Zion (IL). **FREIMAN, Dov**; 46 Haganah St., 76100 Rehovot (IL).

(74) Agent: **ELIEZRI INTELLECTUAL PROPERTY, PATENT ATTORNEYS & LAW OFFICE**; 6 Meitav St., Neta House, Bldg. A, 6789805 Tel Aviv (IL).

(81) Designated States *(unless otherwise indicated, for every kind of national protection available)*: AE, AG, AL, AM, AO, AT, AU, AZ, BA, BB, BG, BH, BN, BR, BW, BY, BZ, CA, CH, CL, CN, CO, CR, CU, CZ, DE, DK, DM, DO, DZ, EC, EE, EG, ES, FI, GB, GD, GE, GH, GM, GT, HN, HR, HU, ID, IL, IN, IS, JP, KE, KG, KM, KN, KP, KR, KZ, LA, LC, LK, LR, LS, LT, LU, LY, MA, MD, ME, MG, MK, MN, MW, MX, MY, MZ, NA, NG, NI, NO, NZ, OM, PA, PE, PG, PH, PL, PT, QA, RO, RS, RU, RW, SC, SD, SE, SG, SK, SL, SM, ST, SV, SY, TH, TJ, TM, TN, TR, TT, TZ, UA, UG, US, UZ, VC, VN, ZA, ZM, ZW.

(84) Designated States *(unless otherwise indicated, for every kind of regional protection available)*: ARIPO (BW, GH, GM, KE, LR, LS, MW, MZ, NA, RW, SD, SL, SZ, TZ, UG, ZM, ZW), Eurasian (AM, AZ, BY, KG, KZ, RU, TJ, TM), European (AL, AT, BE, BG, CH, CY, CZ, DE, DK, EE, ES, FI, FR, GB, GR, HR, HU, IE, IS, IT, LT, LU, LV, MC, MK, MT, NL, NO, PL, PT, RO, RS, SE, SI, SK, SM, TR), OAPI (BF, BJ, CF, CG, CI, CM, GA, GN, GQ, GW, ML, MR, NE, SN, TD, TG).

Declarations under Rule 4.17:

— *of inventorship (Rule 4.17(iv))*

Published:

— *with international search report (Art. 21(3))*

(54) Title: INFRARED DETECTOR WITH INCREASED IMAGE RESOLUTION

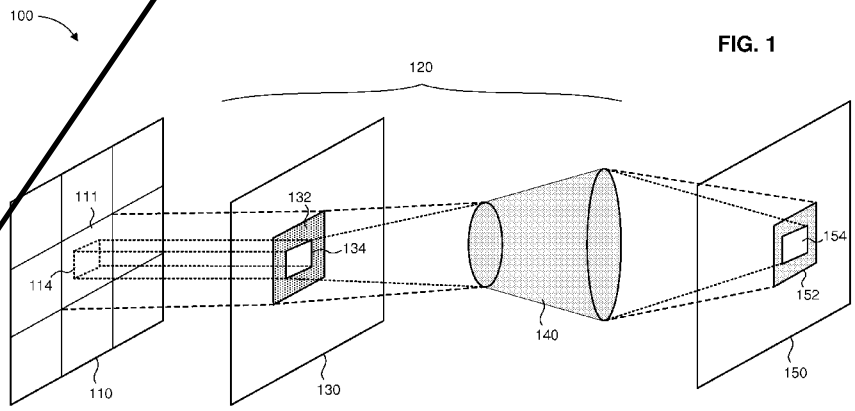

FIG. 1

(57) Abstract: Apparatus for increasing resolution of cryogenically cooled vacuum-sealed infrared imaging detector. A two-dimensional detector array of photosensitive pixels is successively exposed to an image scene, acquiring multiple imaging samples. A masking filter, disposed between the detector array and image scene focal plane, is maintained at a fixed position with respect to the detector array, and reduces the region of pixels collecting incident radiation for each imaging sample such that only a portion of each pixel area of the image scene is imaged onto the corresponding detector array pixel. Shifting means successively shifts the optical path of the image scene relative to the masking filter, by a shifting increment or fill-factor reduction amount equal to a fraction of the array pixel width, to image different sub-pixel regions in each imaging sample. A processor reconstructs an image frame having a resolution greater than the intrinsic detector resolution by the fill-factor reduction amount.

WO 2013/171738 A1

ABSTRACT

INFRARED DETECTOR WITH INCREASED IMAGE RESOLUTION

Apparatus for increasing resolution of cryogenically cooled vacuum-sealed infrared imaging detector. A two-dimensional detector array of photosensitive pixels is successively exposed to an image scene, acquiring multiple imaging samples. A masking filter, disposed between the detector array and image scene, is maintained at a fixed position with respect to the detector array, and masks part of the active region of the detector array pixels by a fill factor reduction amount. Shifting means successively shifts the optical path of the image scene relative to the masking filter to image different sub-pixel regions in each imaging sample, by successively repositioning an optical element, disposed between the masking filter and image scene, relative to the masking filter and detector array. The shifting increment corresponds to the fill-factor reduction amount. A processor reconstructs an image frame having a resolution greater than the intrinsic detector resolution by the fill-factor reduction amount.

Figure 1