(12) INTERNATIONAL APPLICATION PUBLISHED UNDER THE PATENT COOPERATION TREATY (PCT)

(19) World Intellectual Property Organization
International Bureau

(43) International Publication Date
11 February 2010 (11.02.2010)

PCT

(10) International Publication Number
WO 2010/017033 A3

(51) **International Patent Classification**:
F25B 49/02 (2006.01) *F25B 31/00* (2006.01)

(21) **International Application Number**:
PCT/US2009/051408

(22) **International Filing Date**:
22 July 2009 (22.07.2009)

(25) **Filing Language**: English

(26) **Publication Language**: English

(30) **Priority Data**:
61/087,016 7 August 2008 (07.08.2008) US

(71) **Applicant** *(for all designated States except US)*: **CARRIER CORPORATION** [US/US]; One Carrier Place, Farmington, CT 06034-4015 (US).

(72) **Inventors; and**

(75) **Inventors/Applicants** *(for US only)*: **LIFSON, Alexander** [US/US]; c/o Carrier Corporation, One Carrier Place, Farmington, CT 06034-4015 (US). **TARAS, Michael, F.** [US/US]; c/o Carrier Corporation, One Carrier Place, Farmington, CT 06034-4015 (US).

(74) **Agents**: **ENGEL, Martha, J.** et al.; Kinney & Lange PA, 312 S 3rd Street, Minneapolis, MN 55415-1028 (US).

(81) **Designated States** *(unless otherwise indicated, for every kind of national protection available)*: AE, AG, AL, AM, AO, AT, AU, AZ, BA, BB, BG, BH, BR, BW, BY, BZ, CA, CH, CL, CN, CO, CR, CU, CZ, DE, DK, DM, DO, DZ, EC, EE, EG, ES, FI, GB, GD, GE, GH, GM, GT, HN, HR, HU, ID, IL, IN, IS, JP, KE, KG, KM, KN, KP, KR, KZ, LA, LC, LK, LR, LS, LT, LU, LY, MA, MD, ME, MG, MK, MN, MW, MX, MY, MZ, NA, NG, NI, NO, NZ, OM, PE, PG, PH, PL, PT, RO, RS, RU, SC, SD, SE, SG, SK, SL, SM, ST, SV, SY, TJ, TM, TN, TR, TT, TZ, UA, UG, US, UZ, VC, VN, ZA, ZM, ZW.

(84) **Designated States** *(unless otherwise indicated, for every kind of regional protection available)*: ARIPO (BW, GH, GM, KE, LS, MW, MZ, NA, SD, SL, SZ, TZ, UG, ZM, ZW), Eurasian (AM, AZ, BY, KG, KZ, MD, RU, TJ, TM), European (AT, BE, BG, CH, CY, CZ, DE, DK, EE,

[Continued on next page]

(54) **Title**: DISCRETE FREQUENCY OPERATION FOR UNIT CAPACITY CONTROL

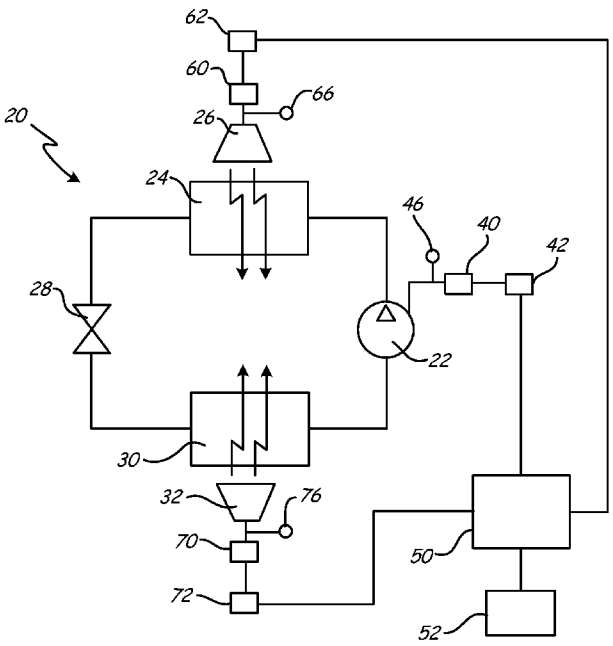

Fig. 1

(57) **Abstract**: A variable speed electric drive for use in refrigerant systems (20) includes an electric motor (40) for driving an associated component (22) at a variable speed that is a function of an operating frequency of the motor (40); and a control (42) for supplying alternating discrete drive frequencies to the electric motor to provide a continuously variable speed drive of the associated component (22). The control (42) cycles the drive frequency to the electric motor (40) among the at least two discrete frequencies so that the variable average resultant speed at which the associated component (22) is driven is a function of a combination of the selected at least two discrete frequencies.

WO 2010/017033 A3

ES, FI, FR, GB, GR, HR, HU, IE, IS, IT, LT, LU, LV, MC, MK, MT, NL, NO, PL, PT, RO, SE, SI, SK, SM, TR), OAPI (BF, BJ, CF, CG, CI, CM, GA, GN, GQ, GW, ML, MR, NE, SN, TD, TG).

Declarations under Rule 4.17:

— *of inventorship (Rule 4.17(iv))*

Published:

— *with international search report (Art. 21(3))*

— *before the expiration of the time limit for amending the claims and to be republished in the event of receipt of amendments (Rule 48.2(h))*

(88) Date of publication of the international search report:
29 April 2010