CABLE TROUGH SYSTEM

Technical Field

The present application pertains to a cable trough system designed for the secure housing and management of various types of cables, including high-tension cables, within an elongate, modular structure comprising cuboid members. Each cuboid member includes a top and bottom casing, forming a hollow cavity accessible through front and back openings. The system incorporates an improved belting solution, consisting of fabric, polymer, or metal bands secured by bridging components, which help to maintain the structural integrity of the trough under conditions of increased internal pressure. Additionally, the system integrates bracket pairs for securing adjacent cuboid members, supports for pipes, and cushioning components to absorb impacts. The cable trough is further enhanced with thermal-resistant, water-resistant, and flame-resistant materials to ensure durability and safety under standard and challenging conditions.

Background

Cable trough systems are commonly employed in industrial and infrastructural settings to organize and protect cables, including high-tension cables. These systems generally consist of cuboid members arranged in series, with belts used to secure the members together and maintain structural stability. Traditionally, these belts are fastened using buckles, which have long been the preferred solution for ensuring the system remains intact.

However, the use of buckles in these systems presents several significant drawbacks. One primary concern is the need to remove the entire belt for installation, replacement, or maintenance. This process is both time-consuming and complex, particularly in large-scale systems or environments with limited access. The removal of the belt means disassembling significant portions of the system, increasing downtime and labor costs. Furthermore, the buckle mechanism is susceptible to wear and tear over time. In environments subject to vibration or frequent use, the repeated force exerted on the buckle can cause the mechanism to degrade, potentially compromising the system's overall reliability.

Additionally, the traditional buckle-based belt system can lead to inefficiencies during maintenance. When the belt needs to be re-tensioned or replaced, proper tension must be applied uniformly across the entire length of the belt. This process requires significant effort and precision, as improper tensioning can lead to misalignment or ineffective securing of the system. Even small variations in tension can affect the integrity of the cable trough, making the system prone to failure. The need for technicians to carefully adjust the belt tension during installation and maintenance further complicates the overall upkeep of the system.

Moreover, over time, the buckle system can cause uneven tension distribution along the belt. As the buckle loosens or degrades due to mechanical stress, vibrations, or environmental conditions, the tension across the belt becomes inconsistent. This misalignment can lead to failure in securing the cuboid members, undermining the stability of the entire system. The buckle mechanism can also be

susceptible to damage from external factors such as impacts or exposure to extreme temperatures, which can cause failure of the fastening system and necessitate repairs or replacements.

The drawbacks associated with buckled belt systems, including the need for belt removal during maintenance, susceptibility to wear, inefficiencies in tensioning, and vulnerability to external factors, highlight the need for a more reliable, efficient, and durable fastening solution for cable trough systems. The present invention seeks to address these limitations by introducing a more effective and user-friendly system for securing cuboid members, thereby improving both ease of maintenance, replacement and system longevity.

Summary

In an aspect, there is provided a cable trough system comprising: a plurality of cuboid members, each cuboid member comprising a top casing and a bottom casing joined to form an elongate body encompassing a hollow cavity that is accessible from a front opening and a back opening respectively located at a front end and a back end of the cuboid member, each of the first plurality of cuboid members connected in tandem with each other such that the back opening of one cuboid member resides adjacent to the front opening of a next cuboid member at an interface or joint where two adjacent cuboid members are coupled; a plurality of top bracket and bottom bracket pairs, wherein for each top bracket and bottom bracket pair the top bracket and bottom bracket is respectively secured or fastened to a joint where edges of the top casing and edges of the

bottom casing of two adjacent cuboid members meet; a plurality of belts and corresponding bridging components, each belt positioned on a cuboid member and comprising a fabric and/or an explosive force absorbent/resilient/ resistant polymer fiber band, or metal band having both ends connected by a bridging component, each bridging component holding both ends of its corresponding belt in tension for securing the belt around a cuboid member and securing the top casing to the bottom casing thereof, wherein each belt and its corresponding bridging component is configured to restrain a cuboid member in the occurrence of a fire, or explosive incident within the hollow cavity wherein the increased air pressure reaches or exceeds a predetermined level, threshold, or value.

Advantageously, the cable trough system's modular design, comprising interconnected cuboid members, provides significant flexibility and ease of installation. Each cuboid member is individually designed, enabling the system to be easily customized and scaled to accommodate specific spatial requirements. This modularity allows for simple expansion or reconfiguration of the system, ensuring it can be adapted to meet evolving needs, such as increased cable capacity or alterations in layout, without requiring substantial modifications or downtime. This feature enhances the system's versatility, making it suitable for a wide range of applications across varying environments, whether in new installations or retrofitting existing infrastructures. Further advantageously, the integration of belts and corresponding bridging components ensures a secure and reliable fastening system. This design allows for the even distribution of tension across the cuboid members, minimizing the risk of uneven load-bearing, misalignment, or wear. By securing the top and bottom

casings together with consistent force, the system significantly reduces the likelihood of operational failure, enhancing long-term durability and reliability. Yet further advantageously, the absence of traditional buckles in the fastening mechanism eliminates the need for time-consuming belt tensioning during maintenance procedures. Unlike conventional systems, where the entire belt must be removed and reinstalled, the current system facilitates simpler and more efficient maintenance processes. The design ensures that individual belts can be easily accessed and adjusted, without requiring the removal of the entire assembly. This reduces maintenance time and effort, lowering the risk of operational disruption. Additionally, by avoiding the use of buckle-based systems, the design minimizes potential issues related to improper tensioning or misalignment, which can compromise the performance and integrity of the system.

Moreover, the construction of the cuboid members and their associated fastening components enhances the system's overall robustness, ensuring that it can withstand varying operational conditions, including changes in temperature, environmental factors, and occasional pressure fluctuations within the cavity. The innovative combination of modularity, secure fastening, and ease of maintenance collectively contributes to a highly efficient and reliable cable management solution, suitable for a wide range of industrial, commercial, and infrastructural applications.

The cable trough system described in the first aspect can be adapted to suit a wide range of applications by selecting materials and configurations that align with specific operational and environmental requirements.

For example, the cuboid members may be constructed from durable materials such as high-strength aluminum, steel, or composite polymers. Aluminum offers a balance of strength and weight, making it suitable for applications where minimizing overall weight is important. Steel is ideal for environments that require higher strength and enhanced resistance to external impacts, while composite materials offer excellent resistance to chemicals, moisture, and temperature fluctuations, making them ideal for harsh or specialized environments. Fire-resistant or flame-retardant materials could also be employed, improving the system's safety in fire-prone areas by preventing ignition and limiting flame spread during incidents.

The top and bottom casings of the cuboid members could be coated with finishes like powder coating or anodizing to enhance their resistance to abrasion, UV radiation, and chemical exposure. This would provide additional protection, ensuring the system’s longevity and reducing maintenance needs.

The belts used to secure the cuboid members could be made from high-tensile-strength fibers such as nylon, polyester, or aramid, which are known for their durability, flexibility, and resistance to wear. In extreme temperature environments, heat-resistant polymers or metal bands could be used, offering stability even in high-pressure or explosive conditions.

The bridging components that secure the belts could be fabricated from corrosion-resistant metals like stainless steel or titanium, ensuring long-lasting strength and

resistance to degradation, even in challenging environments.

To further enhance the system's functionality, insulating or cushioning materials could be incorporated between the top casing and the belt. These materials would absorb impacts from air pressure fluctuations or external shocks, protecting the integrity of the system and extending its lifespan.

Advantageously, the incorporation of interlocking mechanisms like fasteners (e.g. threaded bolts coupled with threaded ends) within the bridging components may enhance both the structural stability and ease of assembly. These mechanisms provide secure and reliable connections between adjacent cuboid members, ensuring system cohesion under dynamic conditions. The use of such mechanisms may facilitate straightforward installation and disassembly, reducing the need for specialized tools or extensive manual labor. Furthermore, the interlocking mechanism (as versus a conventional belt with buckle design) may mitigate the risk of misalignment or improper fastening, thus contributing to uniform pressure distribution across the system and enhancing its overall mechanical resilience. This feature may ensure the integrity of the system under challenging operational conditions, minimizing the risk of failure due to connection loosening or instability.

The interlocking mechanism herein of the current application, which incorporates a bridging component with threaded fasteners, provides significant advantages over conventional belt systems employing buckle mechanisms. In

contrast with a buckle-based system, which relies on frictional engagement or pre-set notches and is susceptible to slippage or loosening under high tension, the belt interlocking mechanism of the present application ensures a mechanically locked connection through the use of one or more threaded fasteners. This configuration enhances the load-bearing capacity and reliability of the belt, making it particularly suited for applications requiring sustained tension and secure fastening.

In comparison to buckle mechanisms, which offer incremental adjustments and are generally easier to engage and disengage, the interlocking mechanism of the current application's cable trough system allows for precise and customizable tension adjustment. The threaded fasteners enable fine control over the applied force, ensuring uniform pressure distribution along the belt and minimizing stress concentrations that could compromise performance under heavy loads. Moreover, the bridging component's design facilitates even tension across the secured structure, further improving stability and durability.

A disadvantage of using a buckle-based belt in situations involving cuboid members of differing sizes is the inherent limitation of the buckle mechanism to adapt to varying dimensions. Buckle systems typically depend on fixed increments of adjustment, which may result in improper tensioning when used with cuboid members of non-uniform dimensions. This can lead to either insufficient tension, causing slippage or instability, or excessive tension, which may damage the belt or the secured structure. In contrast, the interlocking mechanism of the current application, with its threaded fasteners, can accommodate

such variations in size with precision, ensuring a secure and consistent fit regardless of dimensional differences.

The interlocking mechanism herein, of the cable trough system, therefore offers a robust and versatile solution for securing structures in demanding environments, delivering superior performance compared to traditional buckle-based systems, particularly in applications where cuboid members of varying sizes must be accommodated.

Further advantageously, the integration of knurled structures or protrusions on the bridging components may enhance frictional interaction with the corresponding belt, thereby improving tension retention under operational stress. These surface features may augment the effective contact area between the belt and the cuboid members, reducing the likelihood of slippage during high-tension conditions. The knurling or protrusion profiles may be engineered to progressively react to increased air pressure or mechanical force, ensuring that the belt remains adequately tensioned, even in the event of a sudden pressure surge or explosion. This responsive frictional mechanism may therefore provide an additional layer of safety and reliability, ensuring that the system remains intact under extreme conditions.

Yet further advantageously, the use of H-clips to secure the top and bottom casings of the cuboid members offers a robust yet efficient method of fastening. The H-clip design permits rapid assembly without the need for complex tools, providing a simple yet effective solution for coupling the top and bottom casings. This approach may ensure a uniform

and secure fastening, preventing the formation of gaps that could compromise the integrity of the system. The use of H-clips may also streamline the manufacturing process, minimizing production time and reducing the potential for installation errors, thereby enhancing the overall quality control and ease of use.

Advantageously, the inclusion of internal pipe supports within the cuboid members provides an effective means for securing and positioning pipes that carry liquid. These supports are designed to maintain consistent spacing between the pipes and the cuboid member walls, preventing interference between the pipes and other components within the cavity. By securing the pipes in place, the supports ensure that the system remains organized, reducing the risk of mechanical damage. Furthermore, the supports help to prevent the displacement of cables or other critical components, ensuring that the internal structure of the system remains stable and intact under operational conditions.

Advantageously, the inclusion of thermal-resistant and/or flame-resistant materials and/or heat-resistant sheets, can provide enhanced protection in extreme temperature conditions, such as during a fire or in high-heat environments. These materials are engineered to withstand higher temperatures, preventing damage to the cuboid members and other components in the cable trough system. The fire-resistant properties of these materials may also act to contain or delay the spread of fire, reducing the risk of catastrophic failure in the event of an incident. By offering a layer of protection against heat-related damage, these materials ensure the continued functionality

and safety of the system, even in challenging operating environments.

Advantageously, the modular design of the cable trough system provides exceptional flexibility, allowing the system to be easily adapted or expanded to meet evolving requirements. Additional cuboid members, whether straight or curved, can be incorporated into the system to accommodate changing cable management needs or alterations in layout. This flexibility eliminates the need for extensive system overhauls, which would otherwise be costly and time-consuming. The system's modularity makes it highly adaptable for installations where future expansions or reconfigurations are anticipated, thus offering a scalable solution that minimizes operational disruption during system upgrades or modifications.

Each of these design features contributes to the technical advantages of the cable trough system, enhancing its performance, safety, and adaptability. The strategic selection of materials, interlocking fastening mechanisms, friction control features, and thermal management solutions work in concert to provide a robust, reliable, and scalable system. These characteristics make the cable trough system an ideal solution for managing cables in environments where high mechanical strength, fire resistance, and long-term operational reliability are essential.

Definitions

The following words and terms used herein shall have the meaning indicated:

The words “essentially” and “substantially” do not exclude “completely” e.g. a composition which is “substantially free” from Y may be completely free from Y. Where necessary, the word “substantially” may be omitted from the definition of the invention.

Unless specified otherwise, the terms "comprising" and "comprise", and grammatical variants thereof, are intended to represent "open" or "inclusive" language such that they include recited elements but also permit inclusion of additional, unrecited elements.

As used herein, the term "about", typically means +/- 10% of the stated value, more typically +/- 9% of the stated value, more typically +/- 8% of the stated value, more typically +/- 7% of the stated value, more typically +/- 6% of the stated value, more typically +/- 5% of the stated value, more typically +/- 4% of the stated value, more typically +/- 3% of the stated value, more typically +/- 2% of the stated value, more typically +/- 1% of the stated value, and even more typically +/- 0.5% of the stated value.

The term "slightly", in the context of any value described in the specification means typically +/- 10% of the stated value, more typically +/- 9% of the stated value, more typically +/- 8% of the stated value, more typically +/- 7% of the stated value, more typically +/- 6% of the stated value, more typically +/- 5% of the stated value, more typically +/- 4% of the stated value, more typically +/- 3% of the stated value, more typically, +/- 2% of the stated

value, more typically +/- 1% of the stated value, and even more typically +/- 0.5% of the stated value.

The word “similar” is to be inferred as “comparable with” with the intention to neglect any non-major and/or minor features present.

Throughout this disclosure, certain embodiments may be disclosed in a range format. It should be understood that the description in range format is merely for convenience and brevity and should not be construed as an inflexible limitation on the scope of the disclosed ranges.

Accordingly, the description of a range should be considered to have specifically disclosed all the possible sub-ranges as well as individual numerical values within that range. For example, the description of a range such as from 1 to 6 should be considered to have specifically disclosed sub-ranges such as from 1 to 3, from 1 to 4, from 1 to 5, from 2 to 4, from 2 to 6, from 3 to 6 etc., as well as individual numbers within that range, for example, 1, 2, 3, 4, 5, and 6. This applies regardless of the breadth of the range.

Disclosure of Optional Embodiments

Exemplary, non-limiting embodiments according to the single aspect will now be disclosed.

In an embodiment of the single aspect, the following embodiments are disclosed:

In an embodiment, the cable trough system is constructed using carefully selected materials to meet the structural, environmental, and operational requirements. The plurality of cuboid members can be fabricated from materials such as stainless steel, galvanized steel, or aluminum alloys. Stainless steel is preferred for its exceptional resistance to corrosion, high-temperature performance, and mechanical strength, particularly in environments involving harsh weather or exposure to chemicals. Galvanized steel offers a cost-effective option with enhanced corrosion protection, while aluminum alloys provide a lightweight solution with good resistance to oxidation and mechanical stress.

In another embodiment, the top casing and bottom casing of the cuboid members are composed of advanced composite materials such as fiberglass-reinforced polymer (FRP) or carbon fiber-reinforced polymer (CFRP). FRP combines high strength with resistance to environmental degradation, making it ideal for outdoor or marine applications. CFRP provides a superior strength-to-weight ratio and enhanced durability, which are particularly beneficial in installations requiring reduced weight without compromising structural integrity.

In yet another embodiment, the belts securing the cuboid members are manufactured from materials designed to

withstand extreme conditions. Examples include aramid fibers like Kevlar® or high-performance polymers such as ultra-high molecular weight polyethylene (UHMWPE). Aramid fibers provide high tensile strength, resistance to heat, and durability under dynamic loading. UHMWPE offers excellent abrasion resistance, chemical stability, and a high strength-to-weight ratio, making it suitable for environments involving repetitive mechanical stress or vibration.

In a further embodiment, metallic belts are utilized as an alternative to polymer-based belts. These metallic belts may be fabricated from spring steel or titanium alloys. Spring steel ensures elasticity and durability under cyclical loading, while titanium alloys combine lightweight properties with exceptional corrosion resistance and mechanical strength, making them suitable for high-performance or extreme environments.

In an embodiment, there is provided a system where reinforcement plates are positioned beneath the belts to enhance structural support and durability. These reinforcement plates can be fabricated from a variety of materials, including steel for its strength and resilience, aluminum for a lightweight yet strong option, stainless steel for its resistance to corrosion and excellent durability in harsh environments, or composite materials such as fiberglass or carbon fiber, which offer high strength-to-weight ratios and resistance to wear and tear. The choice of material depends on the specific requirements of the application, such as load-bearing capacity, environmental conditions, and weight considerations. These reinforcement plates can provide added support to the belts, ensuring optimal performance and extending their

operational life. In another embodiment, these reinforcement plates may be approximately 110mm in width.

In another embodiment, the bridging components of the belt system are constructed from die-cast aluminum, stainless steel, or polyoxymethylene (POM). Die-cast aluminum offers a balance of strength and weight, allowing for secure connections without adding excessive mass, making it particularly suitable for applications where weight reduction is a priority. Stainless steel provides robust resistance to mechanical wear, high temperatures, and environmental degradation, ensuring long-lasting durability even in harsh operating conditions. Additionally, stainless steel's superior corrosion resistance is ideal for systems exposed to moisture, chemicals, or extreme weather. POM, on the other hand, is valued for its low friction properties, which reduce wear and tear on the system components, and its excellent dimensional stability under varying temperature and humidity conditions. This makes POM particularly beneficial in high-performance applications requiring consistent functionality over time. The combination of these materials enhances the performance and longevity of the interlocking mechanisms in the belt system, ensuring that the components remain securely fastened and operate effectively under tension.

In another embodiment, the interlocking mechanism between the bridging components and the belts is secured using threaded fasteners, such as bolts, screws, nuts or pins made from high-strength materials like stainless steel or titanium alloys. These fasteners allow for precise control over the tension applied to the belts, ensuring that the cuboid members are securely held together during operation. Threaded fasteners also provide an added advantage of

adjustability, allowing the tensioning of the belts to be modified as needed, which is particularly useful in situations where the system may undergo wear or require periodic maintenance. Furthermore, the use of threaded fasteners enhances the system's overall modularity, as the components can be easily assembled, disassembled, and replaced, providing flexibility in both the installation and maintenance processes. For added durability, the threaded fasteners can be coated with anti-corrosion finishes such as zinc plating or black oxide, which protect the fasteners from degradation caused by environmental exposure. This ensures that the system maintains its structural integrity over time, even in corrosive or high-stress environments.

In an embodiment, the interlocking mechanism is formed by two threaded fasteners and their corresponding receiving pins.

In another embodiment, the interlocking mechanism is formed by two threaded fasteners and their corresponding receiving pins (collectively, the bridging component). In a further embodiment, this bridging component allows a belt to be connected with it at two positions (see Fig. 4), in a looped manner. In yet another embodiment, a belt is looped twice around the cuboid members; in some embodiments, the belt could be welded (where the belt is made of metal) or stitched (where the belt is made of fabric) to provide for such method of looping.

In another embodiment, the interlocking mechanism is formed by two threaded fasteners and their corresponding receiving pins (collectively, the bridging component). In a further embodiment, this bridging component allows a belt to be

connected with it at two positions (see Fig. 4), in a looped manner. In yet another embodiment, a belt is looped twice around the cuboid members; in some embodiments, the belt could be welded (where the belt is made of metal) or stitched (where the belt is made of fabric) to provide for such method of looping. In another embodiment, the threaded fasteners can be tightened to a specific torque value using a torque wrench. The torque force in turn causes a belt which is set around a cuboid member to be tensioned. In another embodiment, an originally present torque force could be modified (i.e., by loosening or the tightening of the threaded fastener or fasteners) to correspondingly allow for a slacker or tighter belt around a cuboid member. In another embodiment, a belt which is set in position around a cuboid member can be quickly removed by first removing (partially or entirely) one of the threaded fasteners from the bridging component.

In another embodiment, the threaded fasteners used in the interlocking mechanism may be equipped with locking washers or nylon inserts to prevent loosening due to vibrations or dynamic forces. These locking features help maintain the tension on the belts and ensure that the components remain securely fastened throughout the life of the system. The combination of durable materials for the bridging components and the secure fastening provided by threaded fasteners contributes to a highly reliable and long-lasting cable trough system that can withstand demanding operational conditions.

In yet another embodiment, cushioning components positioned between the belts and cuboid members are fabricated from elastomeric materials such as silicone rubber, ethylene propylene diene monomer (EPDM) rubber, or polyurethane foam.

Silicone rubber offers excellent thermal stability and flexibility over a wide temperature range. EPDM rubber is highly resistant to UV exposure, ozone, and weathering, making it suitable for outdoor applications. Polyurethane foam effectively absorbs impact and vibration, protecting the structural integrity of the cuboid members under sudden pressure changes.

In a further embodiment, H-clips used for coupling the top and bottom casings are made from materials such as nylon 6,6, polycarbonate, or stainless steel. Nylon 6,6 provides a high degree of toughness and resistance to wear, while polycarbonate offers superior impact resistance, making it ideal for installations requiring durability under dynamic forces. Stainless steel H-clips are particularly suited for applications where maximum mechanical strength and environmental resistance are necessary.

In another embodiment, the protective sheets overlaying the joints are fabricated from impact-resistant laminates, aramid composites, or thermoplastic polymers such as polyether ether ketone (PEEK). Laminates provide high rigidity and durability against sudden impacts, while aramid composites offer exceptional heat resistance and mechanical strength. PEEK delivers a unique combination of chemical resistance, thermal stability, and structural performance, allowing it to withstand extreme operational conditions.

In yet another embodiment, the cuboid members are optionally wrapped with flame-resistant fabrics or thermal insulation layers. Suitable materials include ceramic fiber blankets, mineral wool sheets, and high-performance materials such as Nomex®. Ceramic fiber blankets provide

excellent thermal insulation for high-temperature applications, while mineral wool sheets enhance both thermal and acoustic insulation. Nomex® fabrics deliver high levels of fire resistance and durability, making them an effective barrier against fire-related hazards.

In a further embodiment, brackets for reinforcing joints between adjacent cuboid members are manufactured from high-strength steels, copper alloys, or engineering-grade polymers. High-strength steels ensure robust mechanical support under heavy loads, while copper alloys are employed in environments requiring electrical conductivity for grounding purposes. Engineering-grade polymers, such as polyphenylene sulfide (PPS) or polyetherimide (PEI), offer excellent mechanical properties and thermal stability, reducing the overall weight of the system.

In another embodiment, n-shaped support structures within the hollow cavity are fabricated from materials including aluminum alloys, thermoplastics, or composites. Aluminum provides a lightweight yet strong solution, while thermoplastics such as acrylonitrile butadiene styrene (ABS) offer high impact resistance and affordability. Composite materials combining fiberglass and resin are preferred for their excellent stiffness and resistance to environmental degradation.

In yet another embodiment, the cable guides within the system are made from polypropylene (PP), high-density polyethylene (HDPE), or polytetrafluoroethylene (PTFE). Polypropylene and HDPE are lightweight, chemically resistant, and durable, while PTFE ensures low friction, enabling smooth movement of cables and minimizing wear over time.

In a further embodiment, adhesives or sealants used for sealing joints are selected based on their bonding strength and resistance to environmental factors. Examples include silicone-based sealants, epoxy adhesives, and polyurethane sealants. Silicone-based sealants provide flexibility and resistance to temperature variations, epoxy adhesives ensure high-strength bonds for structural applications, and polyurethane sealants balance elasticity with durability for long-term performance.

In another embodiment, pipes within the cuboid members are supported and secured using pipe supports, and are made from copper, stainless steel, or cross-linked polyethylene (PEX). Copper is valued for its excellent thermal conductivity and antimicrobial properties, while stainless steel offers durability and corrosion resistance. PEX provides flexibility, ease of installation, and resistance to scaling, making it a practical choice for fluid transfer in modern systems.

In yet another embodiment, the external wrapping of cuboid members includes materials with flame-retardant properties such as intumescent coatings. These coatings expand under heat exposure to form an insulating layer, which can be combined with base materials like fire-resistant polymers or metallic foils to create a multi-layered protective barrier.

By incorporating these diverse material options, the cable trough system demonstrates flexibility in addressing the demands of various operating environments. The materials proposed ensure durability, safety, and performance under a range of conditions, enabling the system to be tailored

for specific industrial, commercial, or infrastructural applications.

Brief Description Of Drawings/Table

The accompanying drawings and tables illustrate disclosed embodiments and serve to explain the principles of the disclosed embodiments. It is to be understood, however, that the drawings and table are designed for purposes of illustration only, and not as a definition of the limits of the invention.

Fig. 1 shows an isometric view of the cable trough system.

Fig. 2 shows a side view of the cable trough system; sections A-A’ and sections B-B’ are depicted.

Fig. 3a shows a cross-sectional view (tilted) of the cable trough system through section B-B’.

Fig. 3b shows a cross-sectional view of the cable trough system based on section A-A’.

Fig. 4 shows a close up view of the interlocking mechanism which includes threaded fasteners.

Examples

Non-limiting examples of the invention will be further described in greater detail by reference to specific Examples. These examples should not be construed as in any way limiting the scope of the invention.

Example 1:

In this example, a cable trough system is designed to protect and house electrical cables and pipes in a high-tension environment, such as an underground cable tunnel or utility tunnel. The system includes a series of compact cuboid members, each formed from a top casing and a bottom casing that together form a hollow cavity. The dimensions of each cuboid member are approximately 150 mm wide, approximately 120 mm high, and approximately 1000 mm in length. These cuboid members are connected in tandem, with the back opening of one member connecting to the front opening of the next, forming a continuous cable pathway. The cuboid members are fastened together (with bolts and nuts) using stainless steel splice plates. Each splice plate is made of 304-grade stainless steel with a thickness of approximately 3 mm and dimensions of approximately 100 mm by 150 mm. These plates are secured at the joint between two adjacent cuboid members using M8 bolts with threaded ends and galvanized steel washers to ensure a strong, corrosion-resistant connection. The splice plates span the joint, covering any gaps between the top and bottom casings of adjacent cuboid members.

A series of polymer fiber belts, primarily constructed from aramid fibers (e.g., Kevlar), are mounted along the length of each cuboid member. These belts are designed for high

strength and heat resistance and are approximately 40 mm wide and approximately 5 mm thick. The belts are spaced approximately 300 mm apart along the length of the cuboid members, ensuring that no belt is placed directly at the joint. Instead, the belts are placed in intervals along the cuboid members to ensure the structural integrity and security of the system.

Each belt is tensioned around the cuboid members, with the ends connected by a bridging component made of carbon steel. The bridging component includes interlocking bolts with hexagonal heads that allow for secure tensioning of the belt. The bridging components also feature knurled surfaces to increase friction and improve grip, especially during high-pressure events such as fires or explosions.

In addition, each cuboid member includes a cushioning component made of high-density rubber (e.g., Ethylene Propylene Diene Monomer (EPDM) rubber) placed between the top casing and the belt. This component helps absorb any impact caused by rapid air pressure increases during a fire or explosion. The rubber cushioning is approximately 5 mm thick and covers the area where the belt comes into contact with the casing, ensuring that the impact forces are distributed evenly.

To provide additional protection from thermal damage, a thermal-resistant sheet made of fiberglass is wrapped around the cuboid members. The sheet is approximately 3 mm thick and provides heat insulation, helping to protect the system from high temperatures during a fire. In some cases, flame-resistant fabric may be wrapped around the joints of adjacent cuboid members, offering further protection from potential ignition sources.

Within the hollow cavity of each cuboid member, a series of rigid supports are positioned. These supports are made of galvanized steel and are shaped like N-shaped slats, with a slat width of approximately 50 mm and a height of approximately 100 mm. The supports extend across the cavity, separating cables from pipes running along the system. Each support is anchored to the cuboid member via H-clips, which are fastened using M8 bolts. The supports also feature indentations on the slats to securely hold the pipes in place and prevent any shifting during operation. This configuration ensures the cable trough system remains intact, even under extreme conditions such as fires or explosions, while providing robust structural support for the cables and pipes housed within it.

Example 2:

In this example, a cable trough system is designed to protect and house electrical cables and pipes in a high-tension environment, such as an underground cable tunnel or utility tunnel. The system includes a series of compact cuboid members, each formed from a top casing and a bottom casing that together form a hollow cavity. The dimensions of each cuboid member are approximately 300 mm wide, approximately 200 mm high, and approximately 1500 mm in length. These cuboid members are connected in tandem, with the back opening of one member connecting to the front opening of the next, forming a continuous cable pathway.

The cuboid members are fastened together using stainless steel splice plates. Each splice plate is made of 304-grade stainless steel with a thickness of approximately 5 mm and dimensions of approximately 150 mm by 200 mm. These plates are secured at the joint between two adjacent cuboid

members using M10 bolts with threaded ends and galvanized steel washers to ensure a strong, corrosion-resistant connection. The splice plates span the joint, covering any gaps between the top and bottom casings of adjacent cuboid members.

A series of polymer fiber belts, primarily constructed from aramid fibers (e.g., Kevlar), are mounted along the length of each cuboid member. These belts are designed for high strength and heat resistance and are approximately 60 mm wide and approximately 7 mm thick. The belts are spaced approximately 400 mm apart along the length of the cuboid members, ensuring that no belt is placed directly at the joint. Instead, the belts are placed in intervals along the cuboid members to ensure the structural integrity and security of the system.

Each belt is tensioned around the cuboid members, with the ends connected by a bridging component made of carbon steel. The bridging component includes interlocking bolts with hexagonal heads that allow for secure tensioning of the belt. The bridging components also feature knurled surfaces to increase friction and improve grip, especially during high-pressure events such as fires or explosions. In addition, each cuboid member includes a cushioning component made of high-density rubber (e.g., Ethylene Propylene Diene Monomer (EPDM) rubber) placed between the top casing and the belt. This component helps absorb any impact caused by rapid air pressure increases during a fire or explosion. The rubber cushioning is approximately 7 mm thick and covers the area where the belt comes into contact with the casing, ensuring that the impact forces are distributed evenly.

To provide additional protection from thermal damage, a thermal-resistant sheet made of fiberglass is wrapped around the cuboid members. The sheet is approximately 4 mm thick and provides heat insulation, helping to protect the system from high temperatures during a fire. In some cases, flame-resistant fabric may be wrapped around the joints of adjacent cuboid members, offering further protection from potential ignition sources.

Within the hollow cavity of each cuboid member, a series of rigid supports are positioned. These supports are made of galvanized steel and are shaped like N-shaped slats, with a slat width of approximately 75 mm and a height of approximately 150 mm. The supports extend across the cavity, separating cables from pipes running along the system. Each support is anchored to the cuboid member via H-clips, which are fastened using M10 bolts. The supports also feature indentations on the slats to securely hold the pipes in place and prevent any shifting during operation. This configuration ensures the cable trough system remains intact, even under extreme conditions such as fires or explosions, while providing robust structural support for the cables and pipes housed within it.

Example 3:

In this example, a cable trough system is designed to house and protect electrical cables and pipes in a high-tension environment, such as an underground cable tunnel, industrial utility corridor, or data center infrastructure. The system includes a series of large cuboid members, each formed from a top casing and a bottom casing that together form a hollow cavity. The dimensions of each cuboid member are approximately 400 mm wide, approximately 300 mm high,

and approximately 1600 mm in length. These larger cuboid members are connected in tandem, with the back opening of one cuboid member connecting to the front opening of the next, forming a continuous pathway for cables and pipes.

The cuboid members are fastened together using stainless steel splice plates. Each splice plate is made of 304-grade stainless steel with a thickness of approximately 6 mm and dimensions of approximately 200 mm by 300 mm. These plates are secured at the joint between two adjacent cuboid members using M12 bolts with threaded ends and galvanized steel washers to ensure a strong, corrosion-resistant connection. The splice plates span the joint, covering any gaps between the top and bottom casings of adjacent cuboid members.

A series of polymer fiber belts, primarily constructed from aramid fibers (e.g., Kevlar), are mounted along the length of each cuboid member. These belts are designed for high strength, durability, and heat resistance, and are approximately 75 mm wide and approximately 8 mm thick. The belts are spaced approximately 500 mm apart along the length of the cuboid members, ensuring that no belt is placed directly at the joint. The belts are distributed evenly to provide balanced tension and structural support along the cuboid member.

Each belt is tensioned around the cuboid members, with the ends connected by a bridging component made of carbon steel. The bridging component includes interlocking bolts with hexagonal heads that allow for secure tensioning of the belt. The bridging components also feature knurled surfaces to increase friction and improve grip, especially during high-pressure events such as fires or explosions.

In addition, each cuboid member includes a cushioning component made of high-density rubber (e.g., Neoprene) placed between the top casing and the belt. This component helps absorb any impact caused by rapid air pressure increases during a fire or explosion. The rubber cushioning is approximately 8 mm thick and covers the area where the belt comes into contact with the casing, ensuring that the impact forces are distributed evenly and protecting the casings from damage.

To provide additional protection from thermal damage, a thermal-resistant sheet made of fiberglass is wrapped around the cuboid members. The sheet is approximately 5 mm thick and provides heat insulation, helping to protect the system from high temperatures during a fire. In some cases, flame-resistant fabric may be wrapped around the joints of adjacent cuboid members, offering further protection from potential ignition sources.

Within the hollow cavity of each cuboid member, a series of rigid supports are positioned. These supports are made of galvanized steel and are shaped like N-shaped slats, with a slat width of approximately 100 mm and a height of approximately 200 mm. The supports extend across the cavity, separating cables from pipes running along the system. Each support is anchored to the cuboid member via H-clips, which are fastened using M12 bolts. The supports also feature indentations on the slats to securely hold the pipes in place and prevent any shifting during operation.

This configuration ensures the cable trough system remains intact, even under extreme conditions such as fires or explosions, while providing robust structural support for the cables and pipes housed within it.

Example 4

In this example, a cable trough system is designed to house and protect electrical cables and pipes in an industrial setting, such as a high-tension underground cable tunnel or power distribution facility. The system includes large cuboid members, each consisting of a top casing and a bottom casing that together form a hollow cavity. The dimensions of each cuboid member are approximately 400 mm wide, approximately 300 mm high, and approximately 1600 mm in length. These cuboid members are connected in tandem, with the back opening of one cuboid member aligning with the front opening of the next, forming a continuous passageway for cables and pipes.

The cuboid members are secured together using threaded fasteners, with specific variations in size and material compared to standard configurations. For this embodiment, M16 stainless steel bolts are used in place of M12 bolts, offering increased strength and load-bearing capacity. Each bolt has a thread length of approximately 40 mm, and the bolts are accompanied by galvanized steel washers that help distribute the load and prevent damage to the cuboid casings.

To ensure corrosion resistance and long-term durability, the threaded fasteners are made of A4-70 grade stainless steel, which is specifically suited for harsh environments, offering superior resistance to corrosion, especially in humid or chemically aggressive atmospheres. The washers are made of 304-grade stainless steel with a thickness of approximately 4 mm, ensuring optimal support while preventing rust formation over time.

The bolts are tightened in connection with pins (see Fig. 4), which are constructed from high-strength carbon steel with a nickel-plated finish to further enhance corrosion resistance and improve the fasteners' longevity. Additionally, the pins are used with thread locking adhesives to prevent loosening under high-tension or vibration conditions, ensuring the structural integrity of the system.

In some cases, bronze threaded inserts are used in conjunction with the M16 bolts when the cuboid members are made from softer materials such as aluminum or plastic. These inserts provide extra reinforcement at the joint and allow for a secure, high-torque fastening without damaging the casing material.

Each of the threaded fasteners used to secure the cuboid members is distributed along the length of the cuboid members, ensuring that they maintain a balanced tension and structural support across the entire system.

This variation in threaded fastener size, material, and configuration ensures that the cable trough system remains secure and resilient, even under extreme mechanical stress or environmental conditions.

Applications

The potential applications of the presently disclosed technology are wide-ranging and are described below:

It will be apparent that various other modifications and adaptations of the invention will be apparent to the person skilled in the art after reading the foregoing disclosure without departing from the spirit and scope of the invention and it is intended that all such modifications and adaptations come within the scope of the appended claims.

In high-tension power distribution facilities, cable trough systems are essential for securely housing electrical cables and fluid pipes. The cable trough system in the present application, with its robust casings and thermal-resistant components, is designed to withstand mechanical stresses and high temperatures. It offers protection against shock, fire, and explosion-induced pressures, making it a reliable solution for industrial environments such as power plants, substations, and manufacturing facilities, where system integrity and continuous operation are crucial.

Cable trough systems are widely used in underground utility tunnels, where they safeguard electrical cables, communication lines, and fluid pipes. The cable trough system in the present application features a durable construction with thermal and flame-resistant materials, ensuring protection against extreme conditions, including potential fires or explosive events. This makes the system an essential component in urban utility networks, ensuring the safe operation of critical infrastructure in metropolitan areas and industrial zones, even under challenging underground conditions.

In data centers and server farms, the cable trough system provides reliable protection for high-power cables that run

throughout these facilities. The cable trough system in the present application is built with strong, heat-resistant components, including fireproof materials and resilient cushioning, which help mitigate the risks associated with high-temperature environments caused by dense electrical and data cables. By reducing the likelihood of thermal damage, fire, or pressure-induced failures, the cable trough system supports the safe and continuous operation of data processing facilities, which demand uninterrupted service.

Cable trough systems are crucial in oil and gas refineries, where electrical cables and fluid pipes face harsh conditions, such as extreme temperatures and chemical exposure. The cable trough system in the present application incorporates corrosion-resistant components and flame-retardant materials, ensuring the protection of critical infrastructure from damage. With thermal insulation and protective layers, the system is capable of withstanding fires, explosions, and extreme environmental factors, making it vital for maintaining the operational integrity of refineries and petrochemical plants.

In military and aerospace environments, cable trough systems are used to protect electrical and communication cables from mechanical stresses, extreme temperatures, and external pressures. Whether in mobile military bases, aerospace hangars, or specialized equipment storage areas, the cable trough system in the present application provides essential protection for critical infrastructure. The system’s fire-resistant materials and impact-resistant design ensure the safe operation of communication and power systems, even in high-risk environments, such as military operations and aircraft systems.

Claims

1. A cable trough system comprising:

a plurality of cuboid members, each cuboid member comprising a top casing and a bottom casing joined to form an elongate body encompassing a hollow cavity that is accessible from a front opening and a back opening respectively located at a front end and a back end of the cuboid member, each of the first plurality of cuboid members connected in tandem with each other such that the back opening of one cuboid member resides adjacent to the front opening of a next cuboid member at an interface or joint where two adjacent cuboid members are coupled;

a plurality of top bracket and bottom bracket pairs, wherein for each top bracket and bottom bracket pair the top bracket and bottom bracket is respectively secured or fastened to a joint where edges of the top casing and edges of the bottom casing of two adjacent cuboid members meet;

a plurality of belts and corresponding bridging components, each belt positioned on a cuboid member and comprising a fabric and/or an explosive force absorbent/resilient/ resistant polymer fiber band, or metal band having both ends connected by a bridging component, each bridging component holding both ends of its corresponding belt in tension for securing the belt around a cuboid member and securing the top casing to the bottom casing thereof, wherein each belt and its corresponding bridging component is configured to restrain a cuboid member in the occurrence of a fire, or explosive incident within the hollow cavity

wherein the increased air pressure reaches or exceeds a predetermined level, threshold, or value.

2. The cable trough system of claim 1, wherein the bridging component comprises of a structure assembled with at least one interlocking mechanism.

3. The cable trough system of claim 2, wherein the at least one interlocking mechanism further comprises one or more bolts with one or more corresponding threaded ends.

4. The cable trough system of claim 1, wherein the bridging component comprises knurled structures and/or protrusions to control an amount of friction imposed by itself against the belt corresponding thereto, and react or progressively react against the belt in tension, in response to increased air pressure.

5. The cable trough system of claim 1, further comprising for each belt strapped around the cuboid member a cushioning component, element, or structure disposed between the top casing and part of the belt strapped around the cuboid member, for partially absorbing an impact caused by the increased air pressure.

6. The cable trough system of claim 1, wherein each of the top casing and the bottom casing of each cuboid member is substantially U-shaped and provides a planar panel coupled to a first and a second elongate side respectively folded into a first and a second vertically extending sidewall, wherein the first sidewall has a greater spatial extent along a vertical axis than the second sidewall, wherein each sidewall is coupled to or terminates at an elongated edge running lengthwise along the cuboid member, wherein

the elongated edge of each of the first sidewall and the second sidewall of the top casing is fashioned to respectively couple to the elongated edge of the second sidewall and first sidewall of the bottom casing to form the cuboid member.

7. The cable trough system of claim 1, further comprising a pair of panel edge clips or H-clips for coupling the elongate edges of the top casing to the elongate edges of the bottom casing.

8. The cable trough system of claim 7, wherein each H-clip comprises a strip running lengthwise corresponding to the elongate edge of the top casing and/or bottom casing defining a top groove and a bottom groove for separately accommodating the elongate edge of the coupled top and bottom casings.

9. The cable trough system of claim 1, wherein for two adjacent cuboid members, the pair of top and bottom brackets fastened to the joint stretches over the edges of the two adjacent cuboid members, concealing or overlaying a planar gap between the two adjacent cuboid members.

10. The cable trough system of claim 9, wherein the brackets are splice plates.

11. The cable trough system of claim 10, further wherein the splice plates are masked by steel tape.

12. The cable trough system of claim 1, further comprising at least one support positioned within the hollow cavity of each cuboid member, each support comprising a substantially rigid slat extending from one sidewall toward

or to another sidewall of the bottom casing, and shaped for carrying a set of pipes running within the cavity along the connected cuboid members, and separating the pipes from one or more cables running underneath the support.

13. The cable trough system of claim 12, wherein each support comprises an n-shaped structure having its slat extending across the cavity and two downwardly reaching legs.

14. The cable trough system of claim 13, wherein each support carries one or more indentations on the slat for guiding, holding, or securing the pipe on the support.

15. The cable trough system of claim 14, wherein each leg terminates in or into two parallel prongs with a more outwardly located prong being insertable into a top groove for anchoring the support onto a H-clip.

16. The cable trough system of claim 1 further comprising a protective sheet placed within the cavity overlaying the joint of two adjacent cuboid members at each bottom casing, wherein the protective sheet is configured for at least partially absorbing a force or impact directed toward the joint due to the increased air pressure.

17. The cable trough system of claim 16, wherein the protective sheet comprises two L-shaped frames, wherein each frame has a vertical segment and a horizontal segment respectively overlaying onto a sidewall and a planar panel of a bottom casing, and wherein the two L-shaped frames mate at the edge of the horizontal segment to form the protective sheet.

18. The cable trough system of claim 1, wherein each of the plurality of belts is spaced equidistant along each cuboid member.

19. The cable trough system of claim 1, wherein each cuboid member has one of the plurality of belts strapped proximate to the joint.

20. The cable trough system of claim 1, wherein the top casing of each cuboid member is reversibly detachable from the bottom casing, permitting access to the cavity upon removal of the top bracket and belts.

21. The cable trough system of claim 1, further comprising a thermal-resistant sheet wrapped around at least one of the cuboid members or the joint of two adjacent cuboid members.

22. The cable trough system of claim 1, further comprising a water resistant and flame resistant material or fabric wrapped around at least one of the cuboid members or the joint of two adjacent cuboid members.

23. The cable trough system of claim 1, wherein the first plurality of cuboid members includes a first terminal cuboid member, and wherein the cable trough system further comprises one of:

(a) a second cuboid member structure coupled to the first terminal cuboid member of the first plurality of cuboid members, wherein the second cuboid member structure has a larger opening end, a smaller opening end, and a length there between along which a perpendicular cross sectional area changes between the larger opening end and the smaller

opening end, and wherein one of the larger opening end and the smaller opening end is coupled to the front opening of the first terminal cuboid member of the first plurality of cuboid members; and

(b) a third cuboid member structure comprising a plurality of cuboid member segments configured for curving or bending in one of a leftward, a rightward, an upward, and a downward direction, wherein a terminal cuboid member segment of the third cuboid member structure is coupled to the first terminal cuboid member of the first plurality of cuboid members.

24. The cable trough system of claim 1, wherein each of the first plurality of cuboid members has a first cross-sectional area perpendicular to a length of each of the first plurality of cuboid members, wherein the first plurality of cuboid members includes a first terminal cuboid member, and wherein the cable trough system further comprises:

(a) a second cuboid member structure coupled to the first terminal cuboid member of the first plurality of cuboid members, wherein the second cuboid member structure has a larger opening end, a smaller opening end, and a length there between along which a perpendicular cross sectional area changes between the larger opening end and the smaller opening end, and wherein one of the larger opening end and the smaller opening end is coupled to the front opening of the first terminal cuboid member of the first plurality of cuboid members; and

(b) a third plurality of cuboid members, wherein each of the third plurality of cuboid members has a third cross-

sectional area different than the first cross sectional area, and wherein a terminal cuboid member of the third plurality of cuboid members is coupled to the other of the larger opening and the smaller opening end of the second cuboid member structure.

CABLE TROUGH SYSTEM

Abstract

The present invention relates to a cable trough system designed to house and protect cables. The system consists of interconnected cuboid members, each with a hollow cavity accessible from both front and back openings. These members are secured using top and bottom bracket pairs, belts, and tensioning components to maintain structural integrity in the event of increased air pressure, such as during a fire or explosive incident. Additionally, the system includes cushioning elements, protective sheets, and pipe supports, ensuring durability and functionality of the cable trough.

(Figure 1)

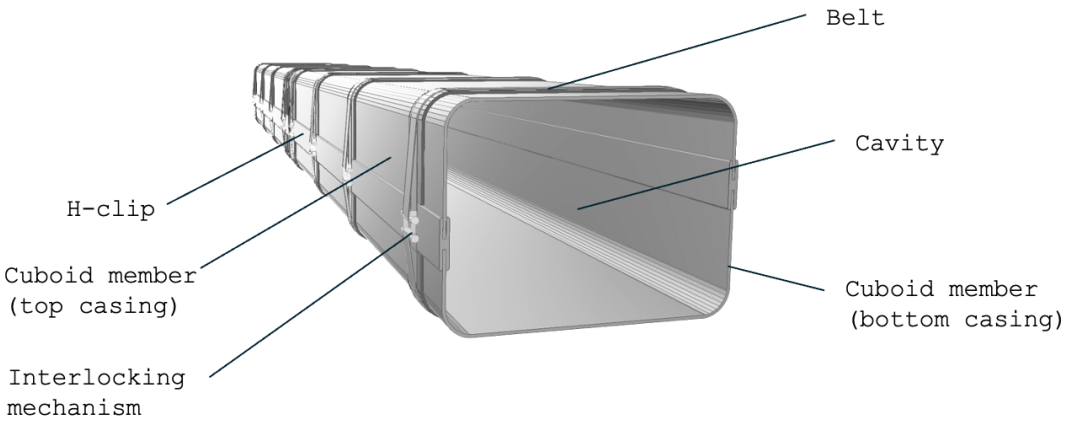
Belt
Cavity
H-clip
Cuboid member
(top casing)
Cuboid member
(bottom casing)
Interlocking
mechanism

Fig. 1

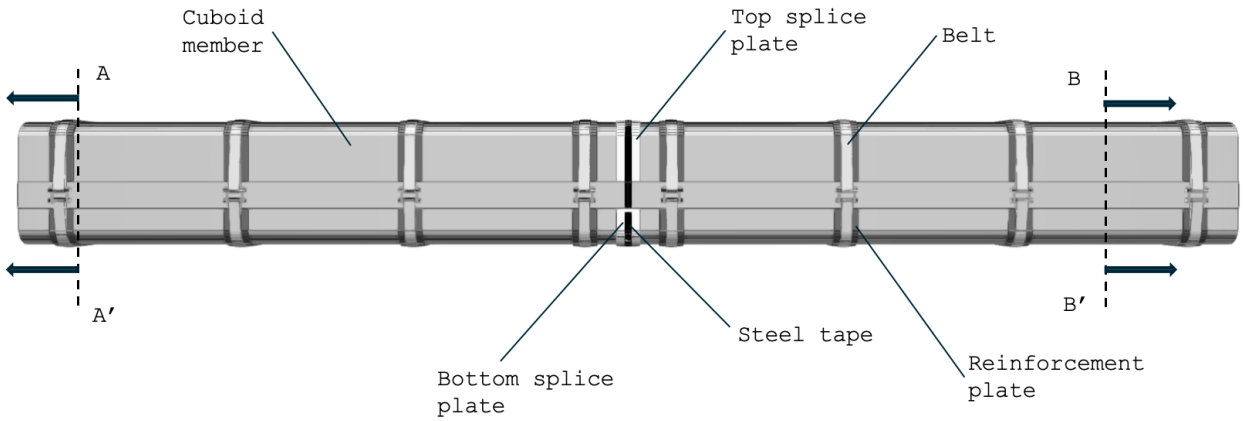
Cuboid
member
Top splice
plate
Belt
A
B
A′
B′
Steel tape
Bottom splice
plate
Reinforcement
plate

Fig. 2

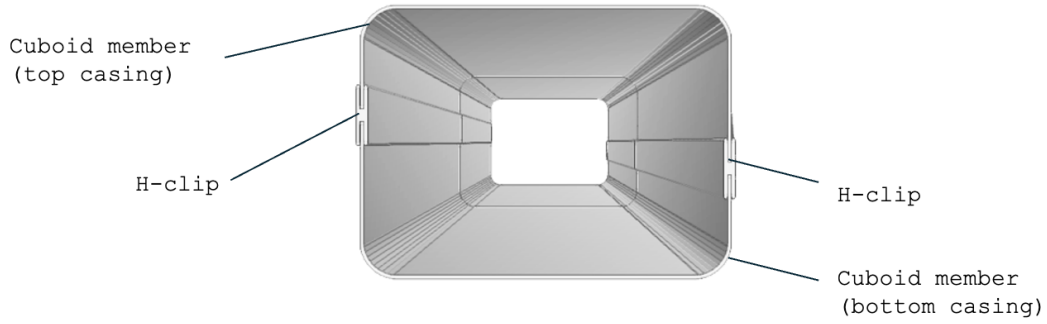
Cuboid member
(top casing)
H-clip
H-clip
Cuboid member
(bottom casing)

Fig. 3a

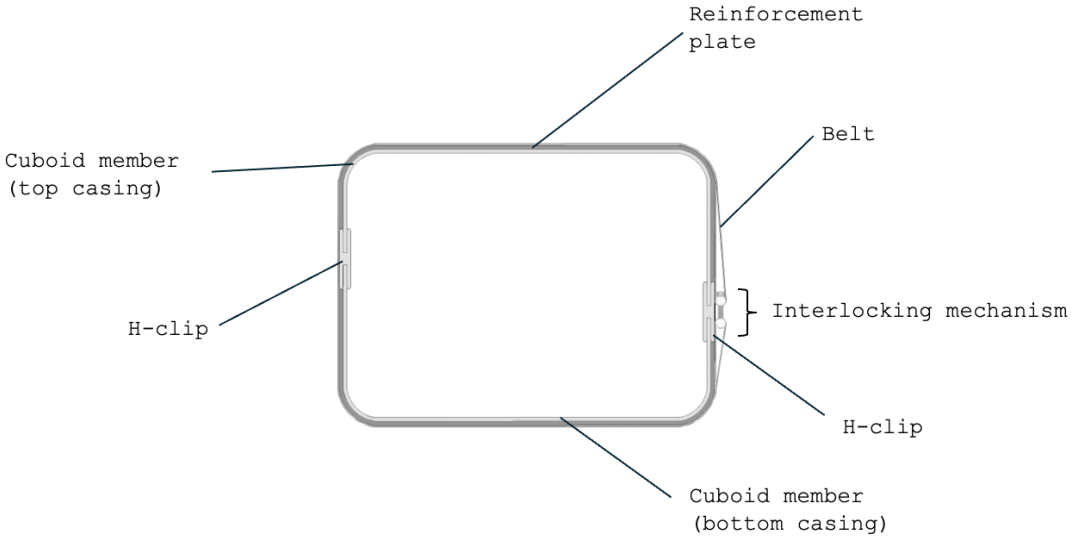
Reinforcement
plate
Belt
Cuboid member
(top casing)
H-clip
Interlocking mechanism
H-clip
Cuboid member
(bottom casing)

Fig. 3b

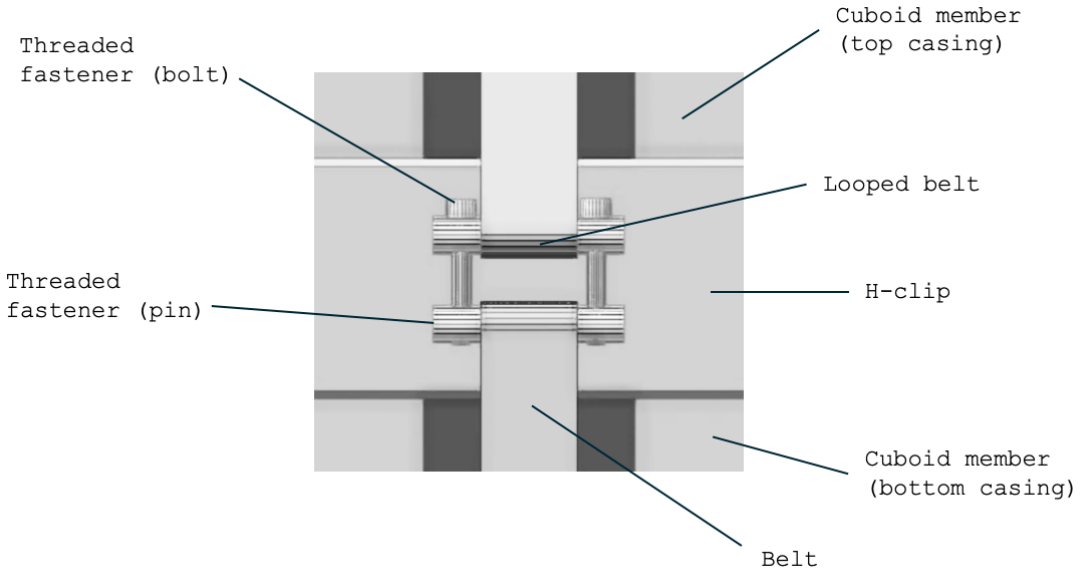
Threaded
fastener (bolt)
Cuboid member
(top casing)
Looped belt
Threaded
fastener (pin)
H-clip
Cuboid member
(bottom casing)
Belt

Fig. 4