FIG. 1

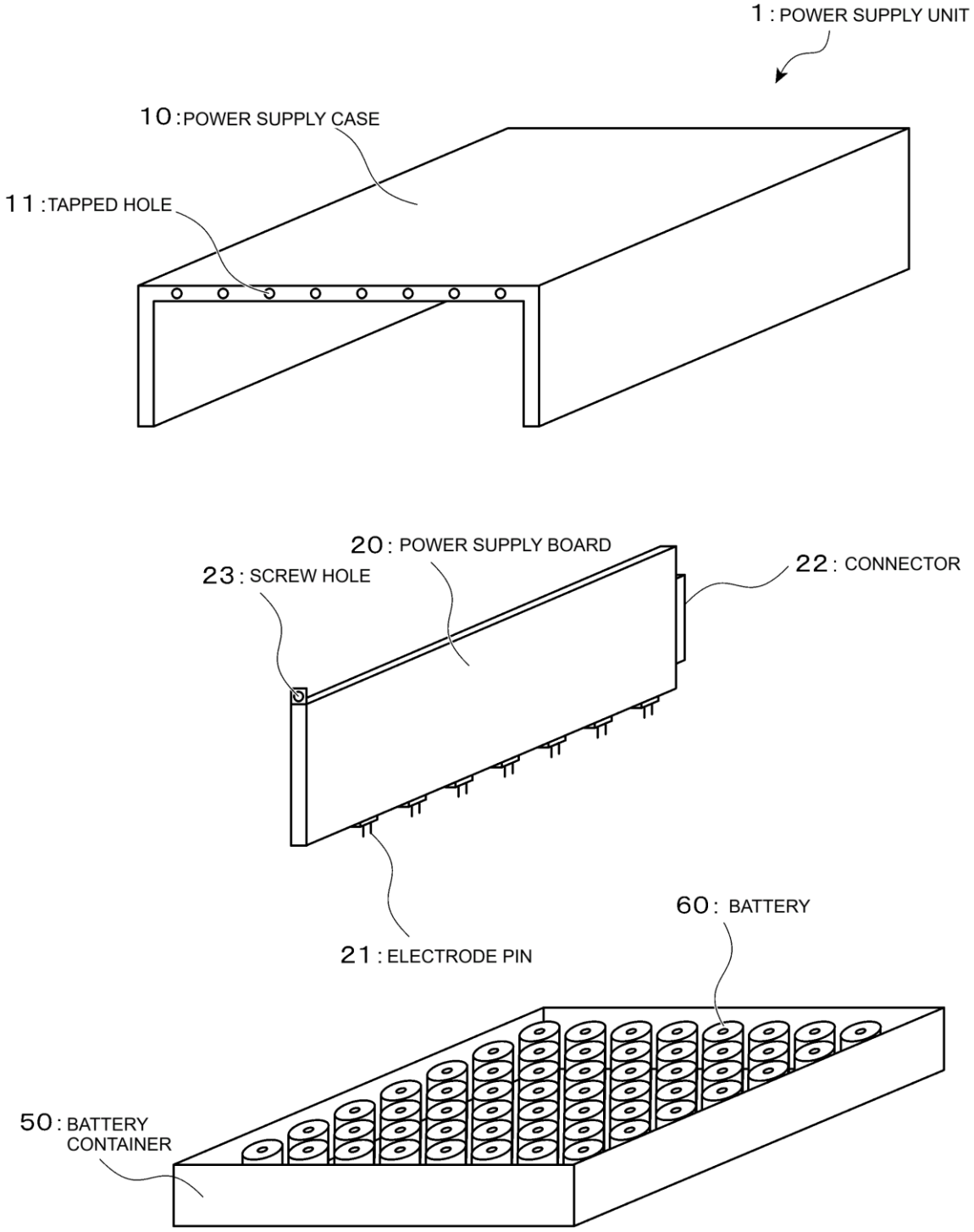
1 : POWER SUPPLY UNIT
10 : POWER SUPPLY CASE
11 : TAPPED HOLE
20 : POWER SUPPLY BOARD
23 : SCREW HOLE
22 : CONNECTOR
21 : ELECTRODE PIN
60 : BATTERY
50 : BATTERY CONTAINER

FIG. 2

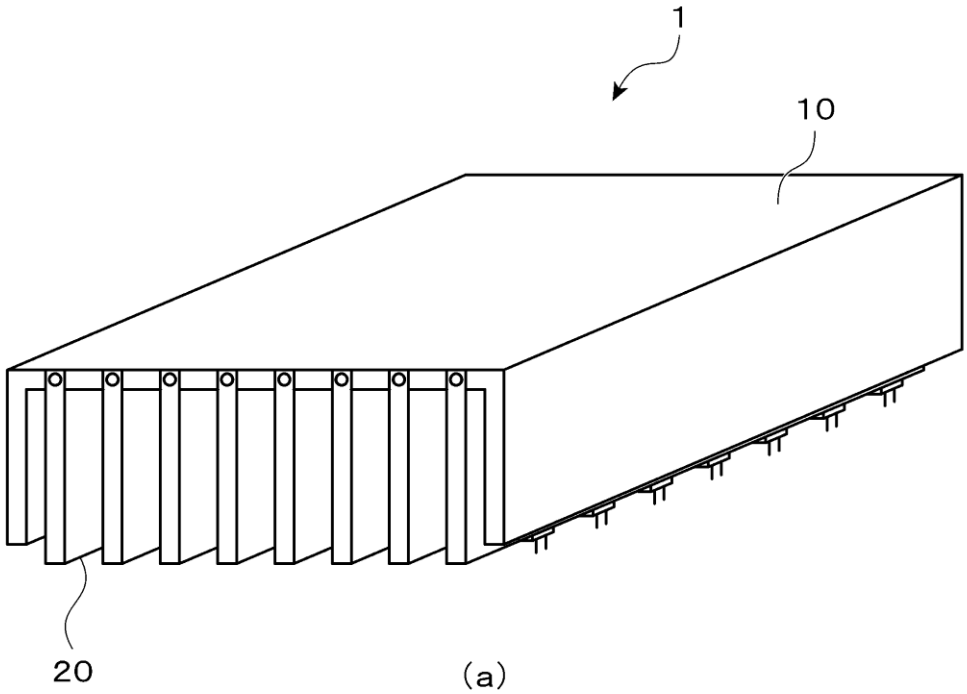

(a)

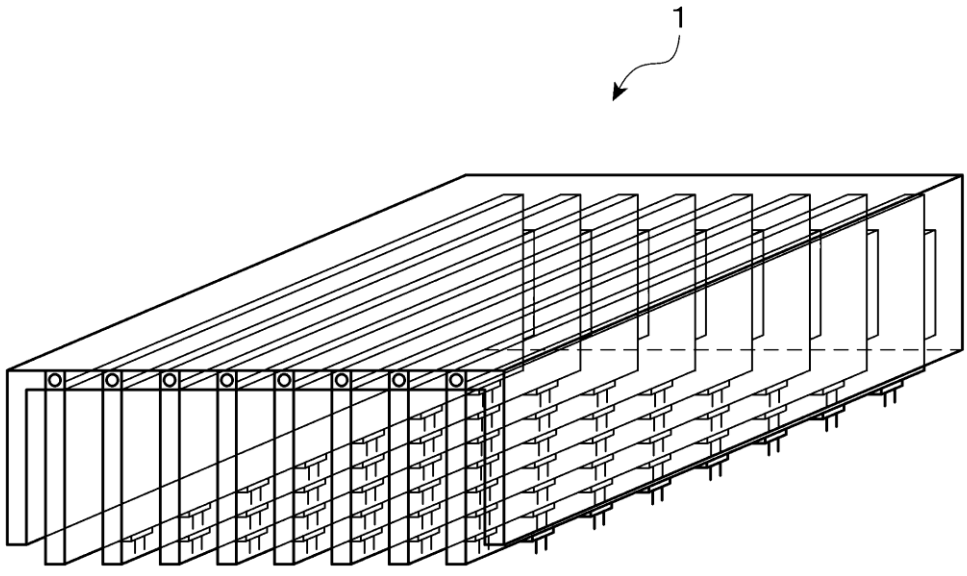

(b)

FIG. 3

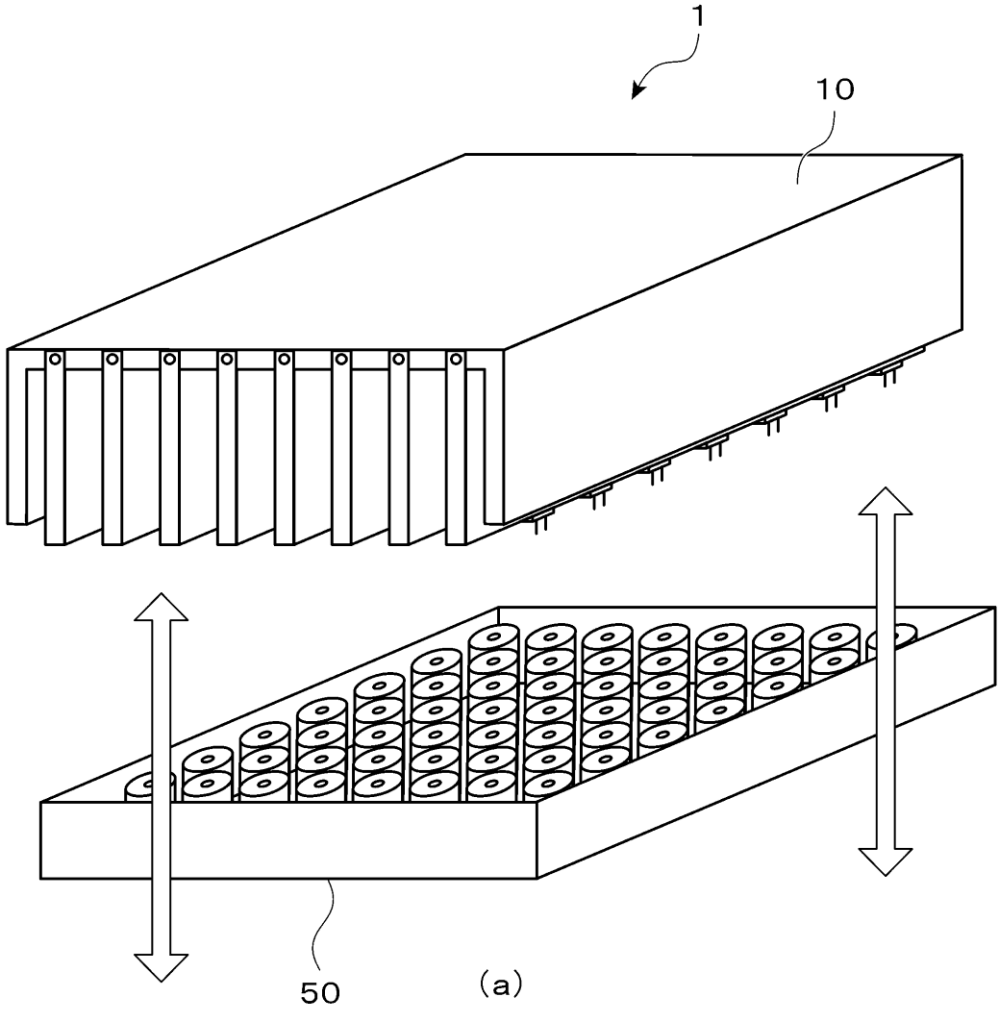

FIG. 4

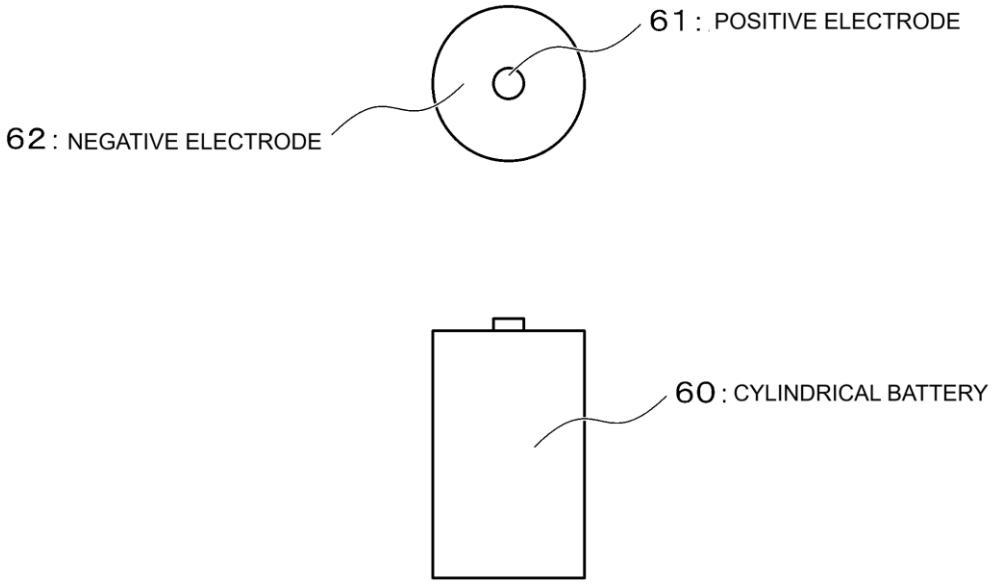
61 : POSITIVE ELECTRODE
62 : NEGATIVE ELECTRODE
60 : CYLINDRICAL BATTERY

FIG. 5

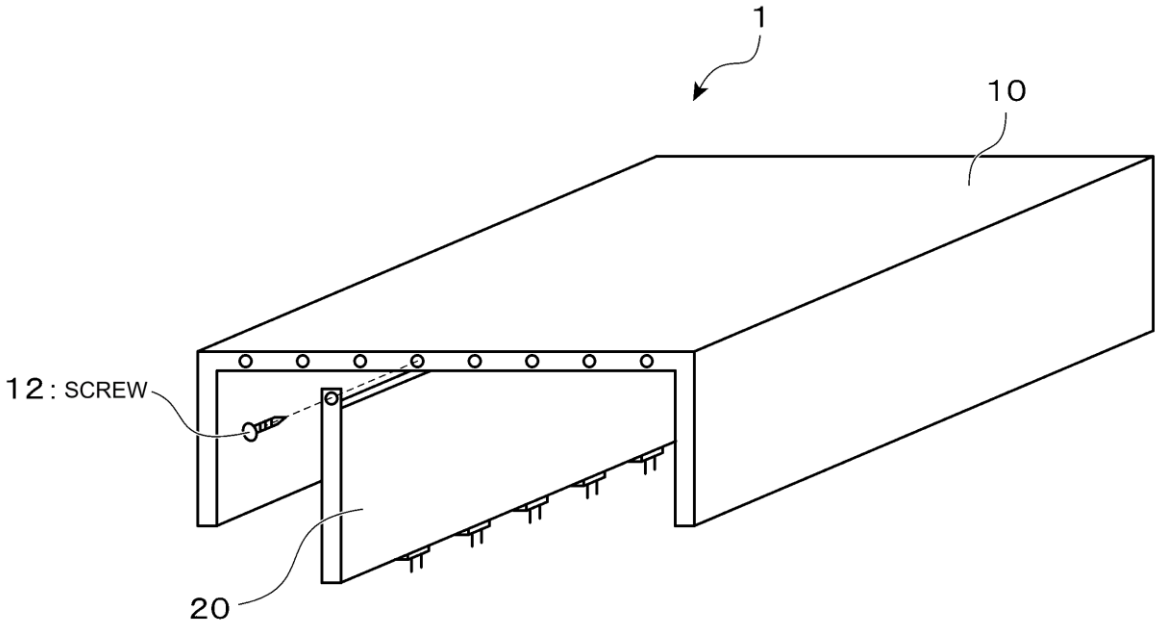
1
10
12 : SCREW
20

FIG. 6

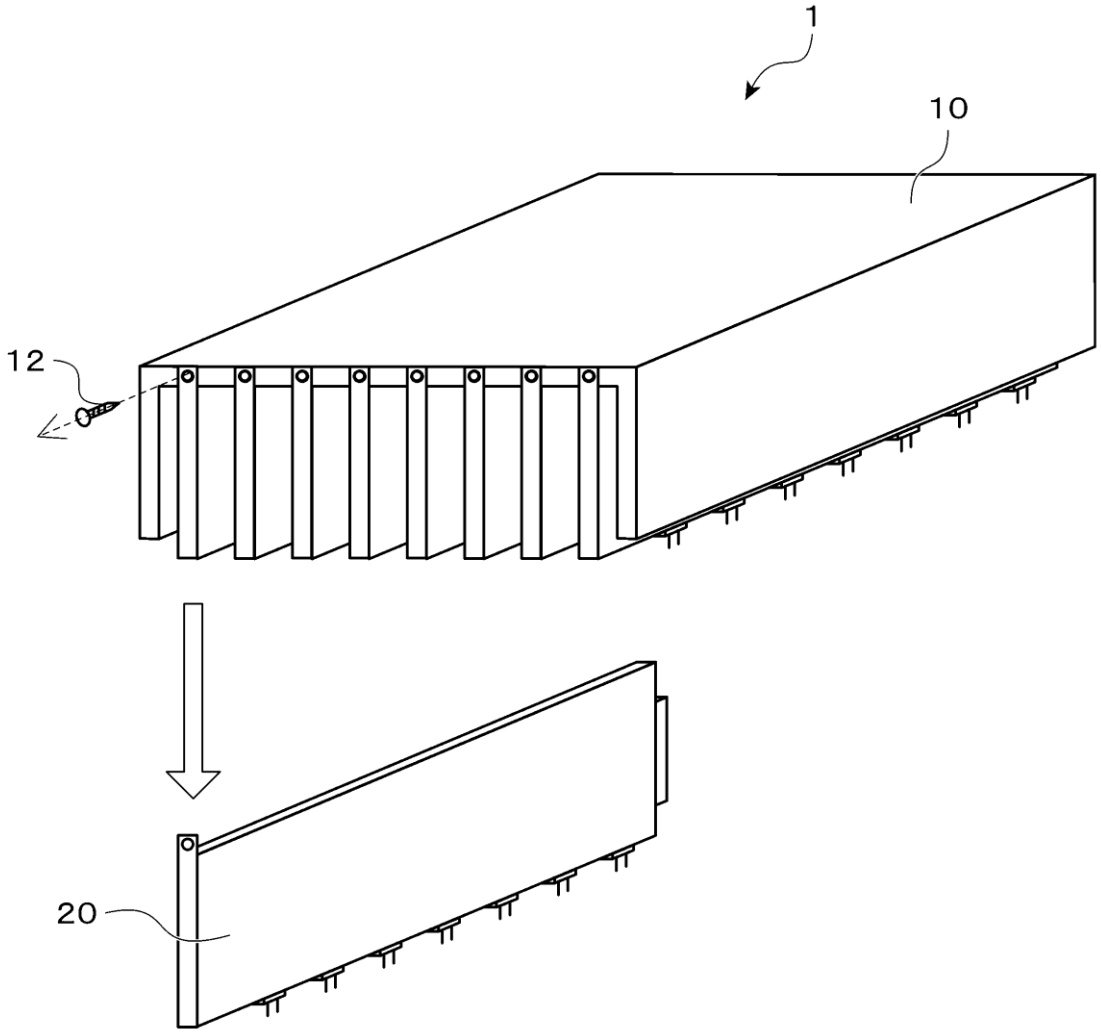

FIG. 7

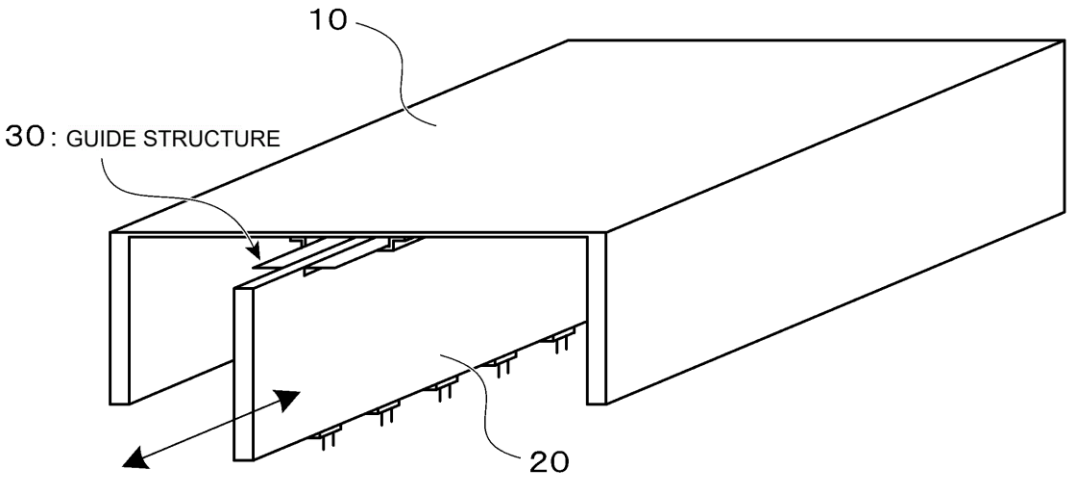

FIG. 8

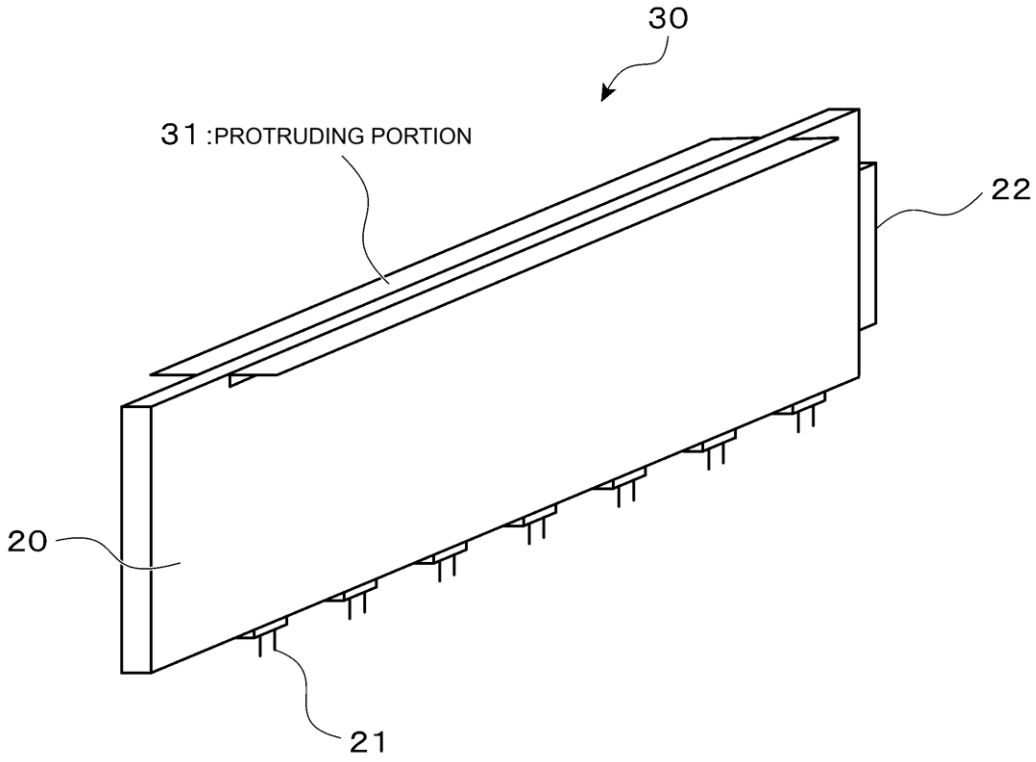
30
31 :PROTRUDING PORTION
22
20
21

FIG. 9

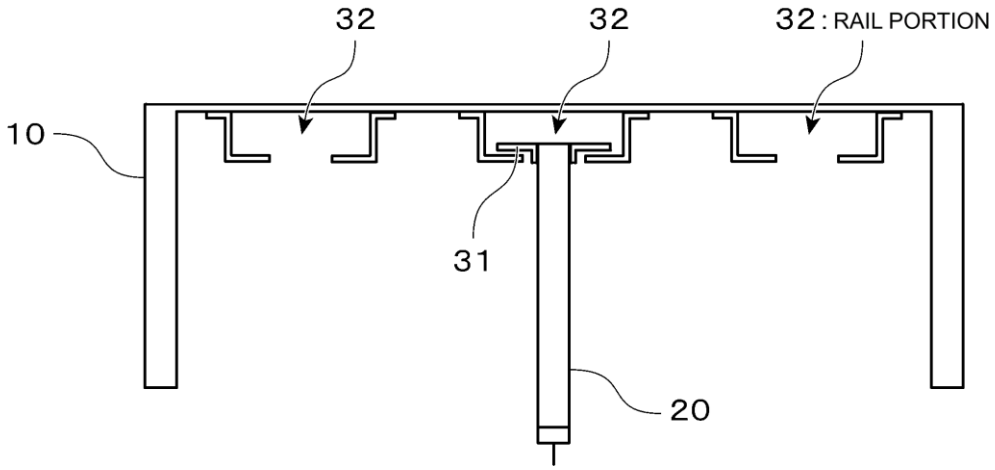
32
32
32 : RAIL PORTION
10
31
20

FIG. 10

