Figures

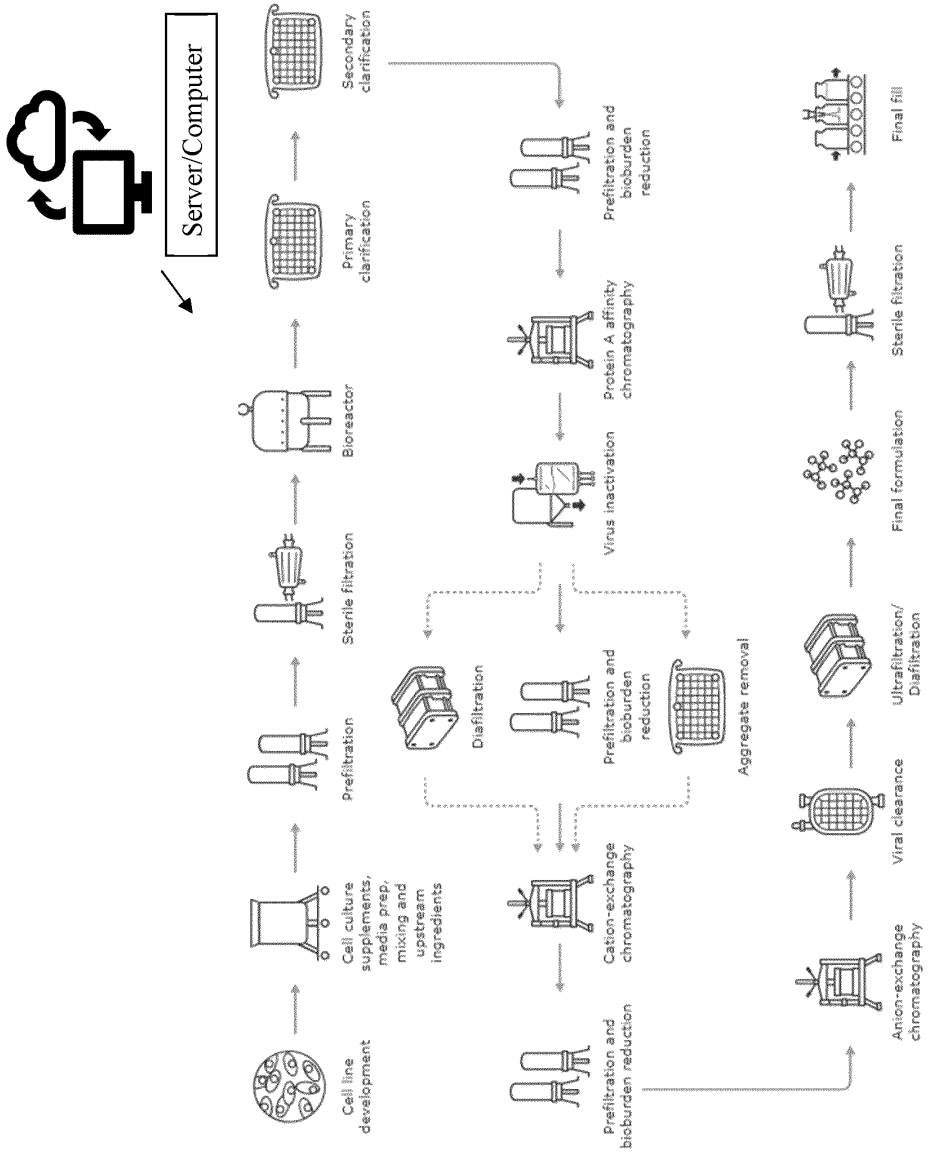

Figure 1

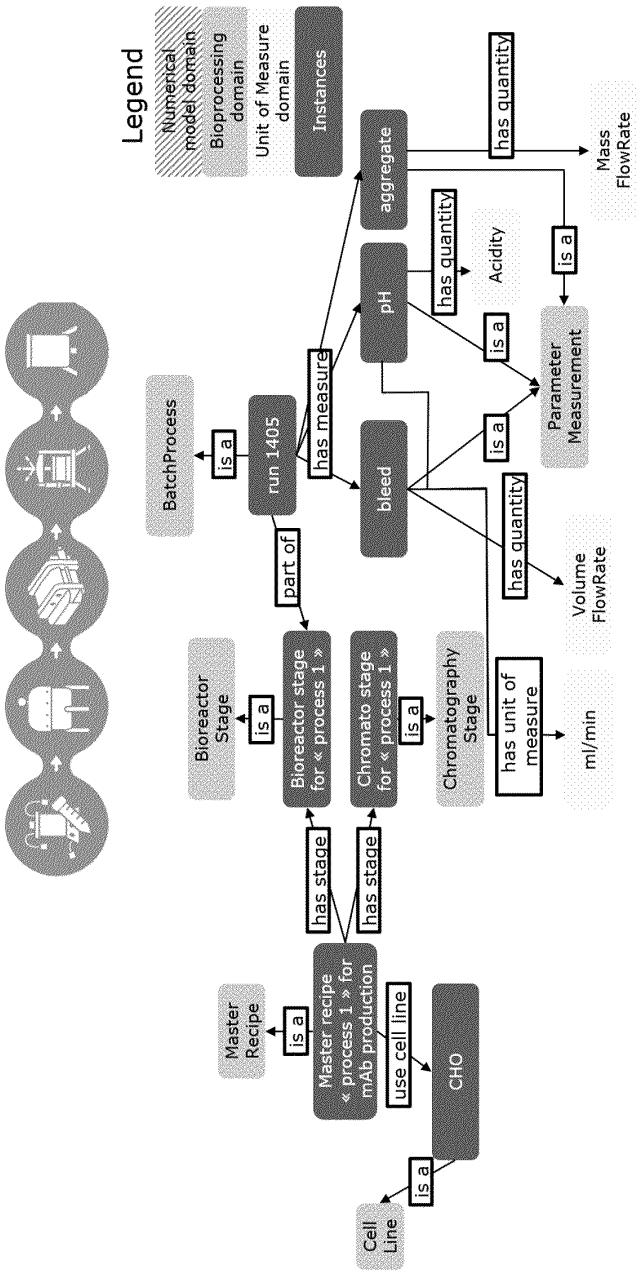
Legend
Numerical model domain
Bioprocessing domain
Unit of Measure domain
Instances
BatchProcess
is a
run 1405
has measure
part of
aggregate
pH
bleed
has quantity
Mass FlowRate
Acidity
Parameter Measurement
Volume FlowRate
Bioreactor Stage
Bioreactor stage for « process 1 »
Chromato stage for « process 1 »
Chromatography Stage
has unit of measure
ml/min
has stage
Master Recipe
Master recipe « process 1 » for mAb production
use cell line
CHO
Cell Line

Figure 2

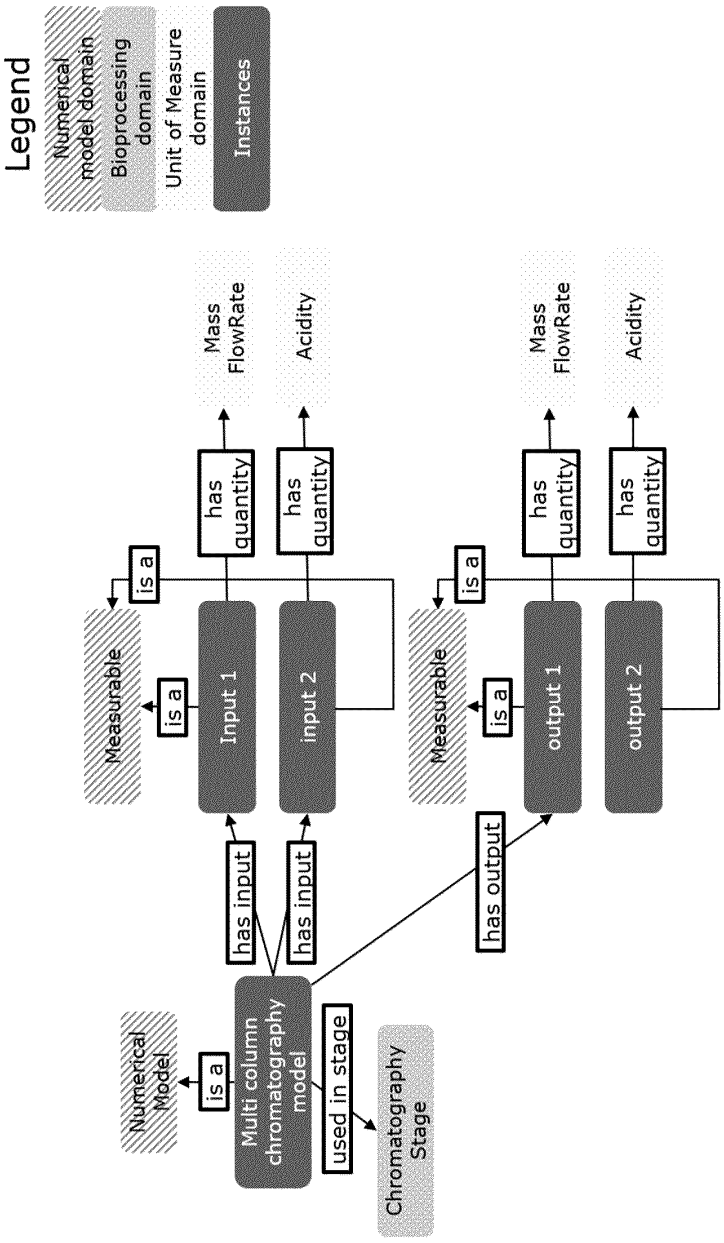
Legend
Numerical model domain
Bioprocessing domain
Unit of Measure domain
Instances
Mass FlowRate
Acidity
has quantity
has quantity
is a
Measurable
is a
Input 1
input 2
has input
has input
Multi column chromatography model
is a
Numerical Model
used in stage
Chromatography Stage
has output
Mass FlowRate
Acidity
has quantity
has quantity
is a
Measurable
is a
output 1
output 2

Figure 3

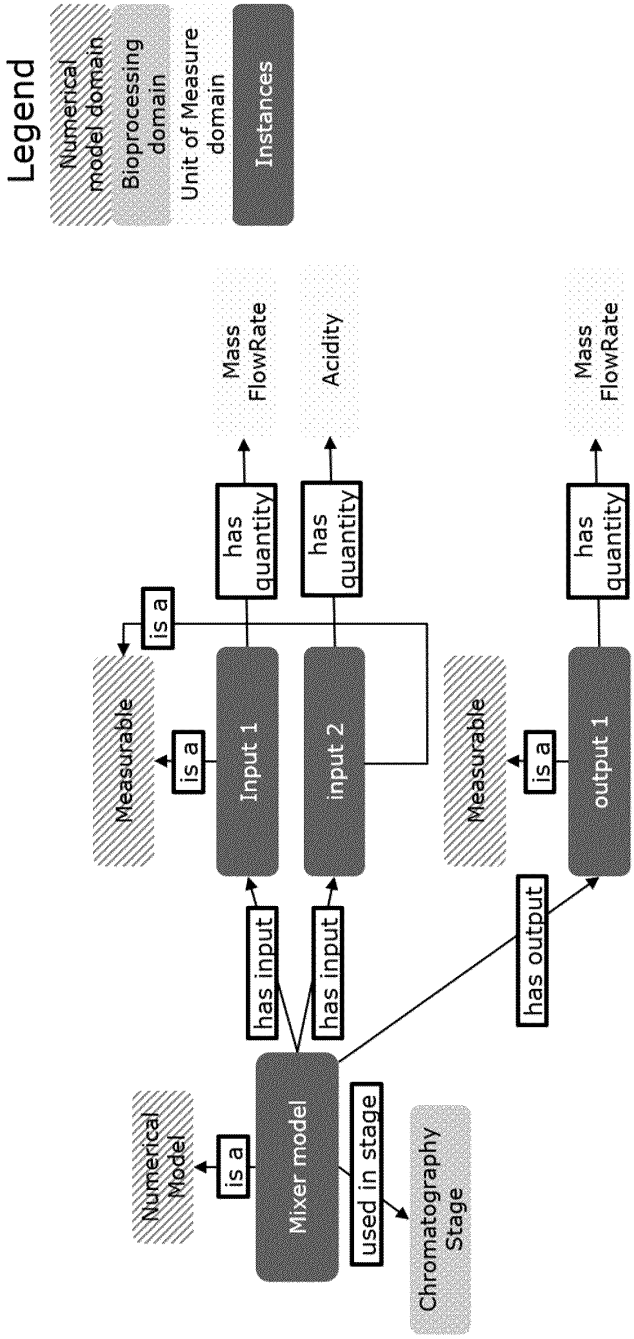
Legend
Numerical model domain
Bioprocessing domain
Unit of Measure domain
Instances
Mass FlowRate
Acidity
Mass FlowRate
has quantity
has quantity
has quantity
is a
is a
is a
Measurable
Input 1
input 2
Measurable
output 1
has input
has input
has output
Numerical Model
is a
Mixer model
used in stage
Chromatography Stage

Figure 4

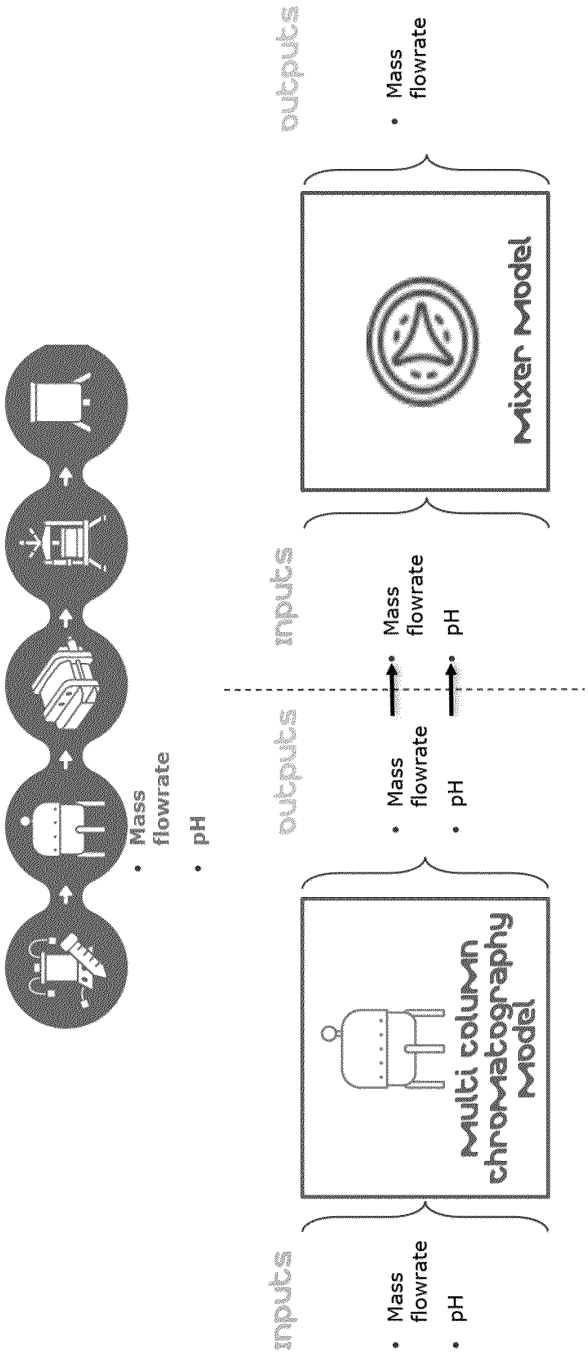
Mass flowrate
pH
inputs
Multi column chromatography Model
outputs
Mass flowrate
pH
inputs
Mixer Model
outputs
Mass flowrate

Figure 5