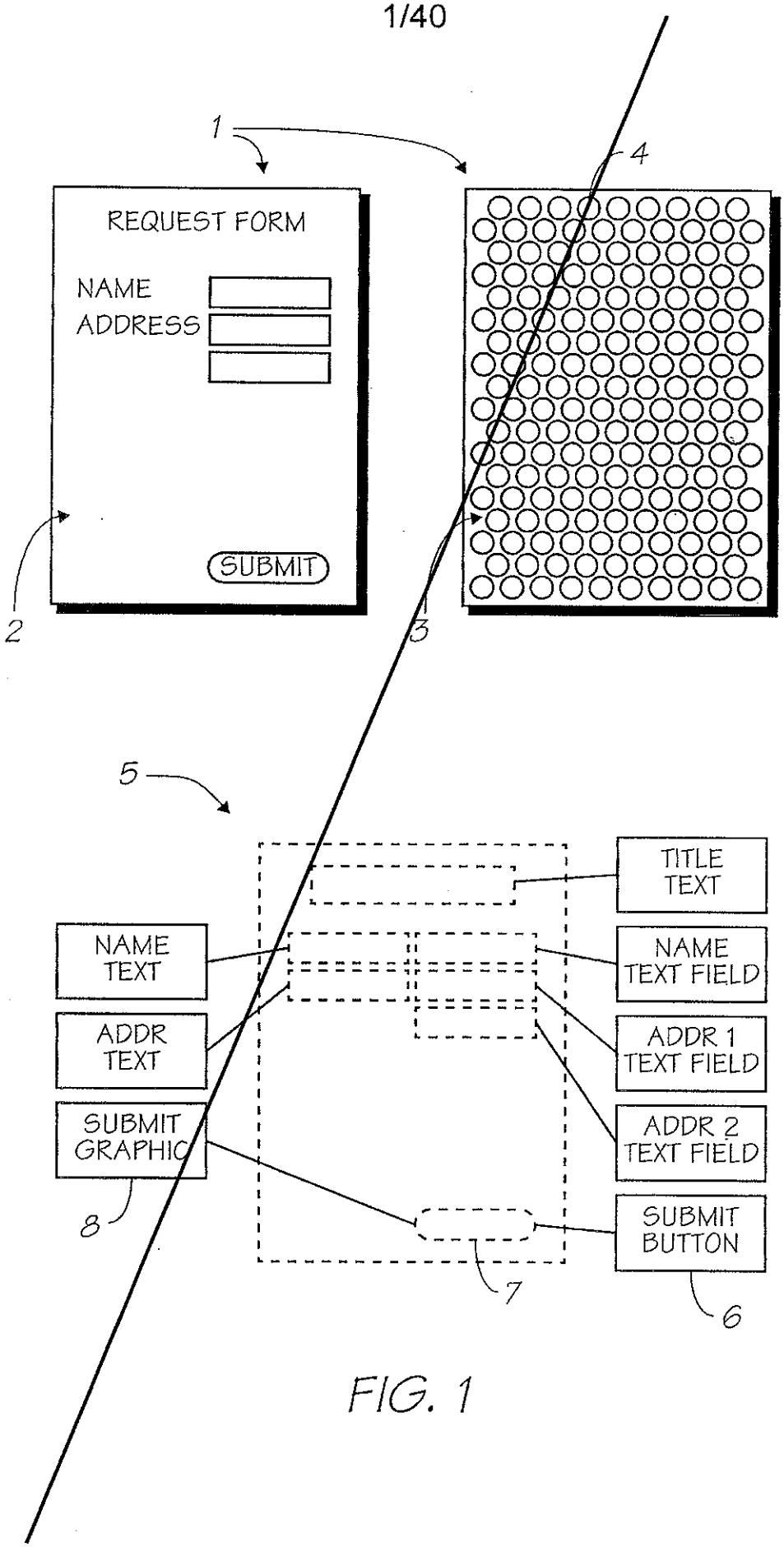
1
REQUEST FORM
NAME
ADDRESS
SUBMIT
2
3
4
5
TITLE TEXT
NAME TEXT
NAME TEXT FIELD
ADDR TEXT
ADDR 1 TEXT FIELD
SUBMIT GRAPHIC
ADDR 2 TEXT FIELD
SUBMIT BUTTON
6
7
8

FIG. 1

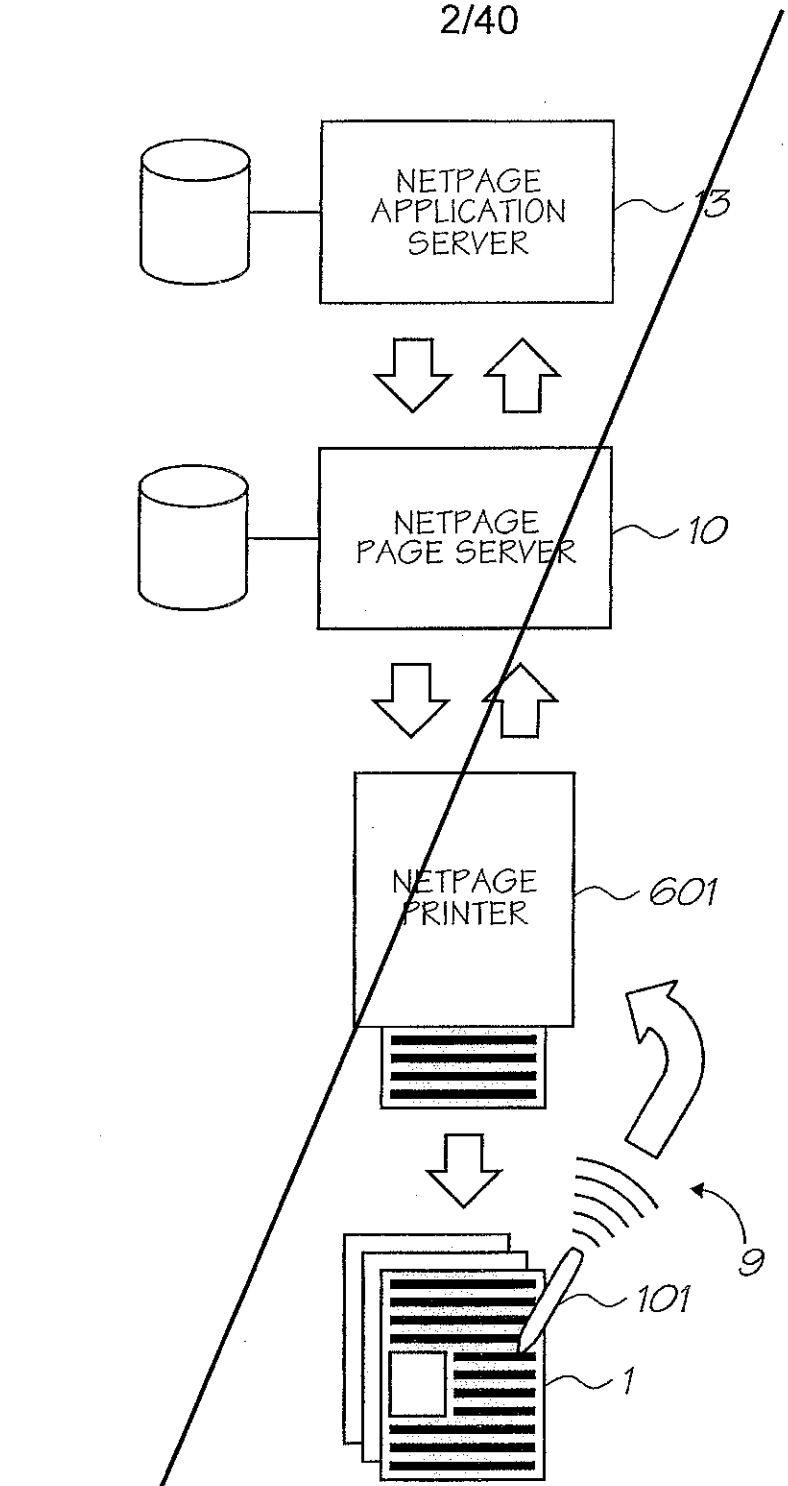
NETPAGE
APPLICATION
SERVER
13
NETPAGE
PAGE SERVER
10
NETPAGE
PRINTER
601
9
101
1

FIG. 2

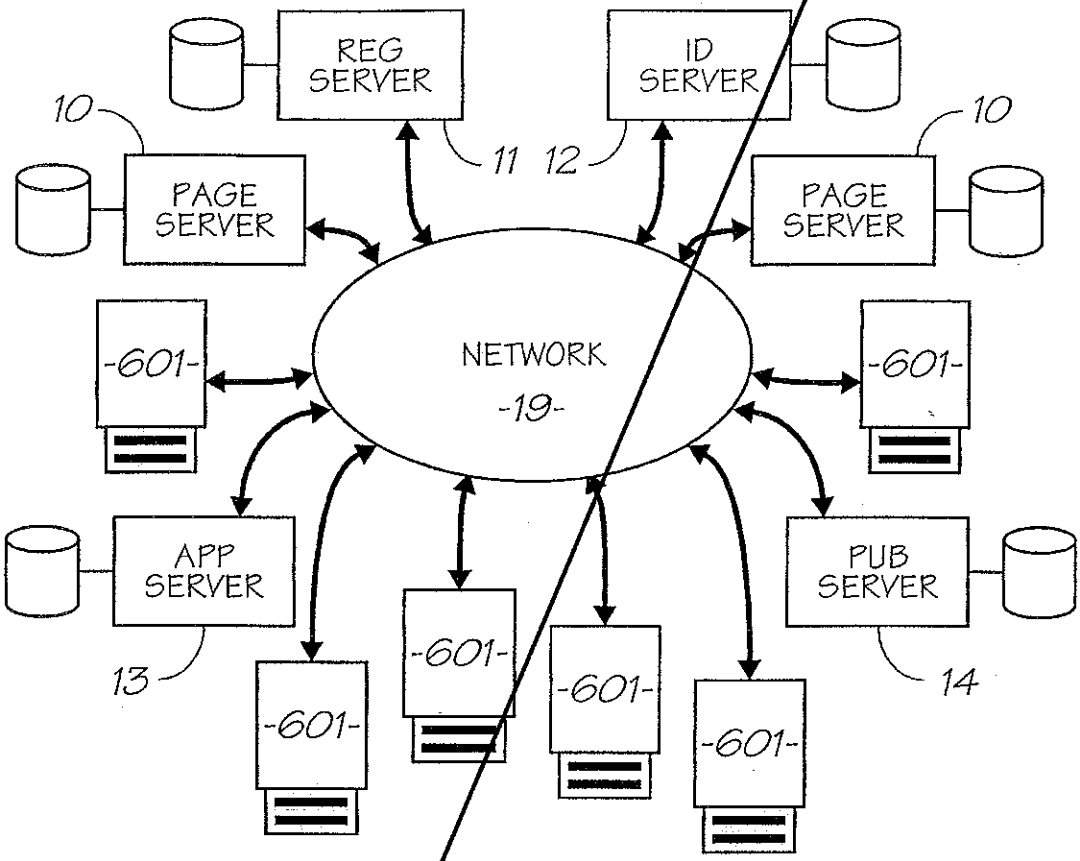
REG SERVER
ID SERVER
10
11
12
10
PAGE SERVER
PAGE SERVER
NETWORK
-19-
-601-
-601-
APP SERVER
PUB SERVER
13
14
-601-
-601-
-601-
-601-

FIG. 3

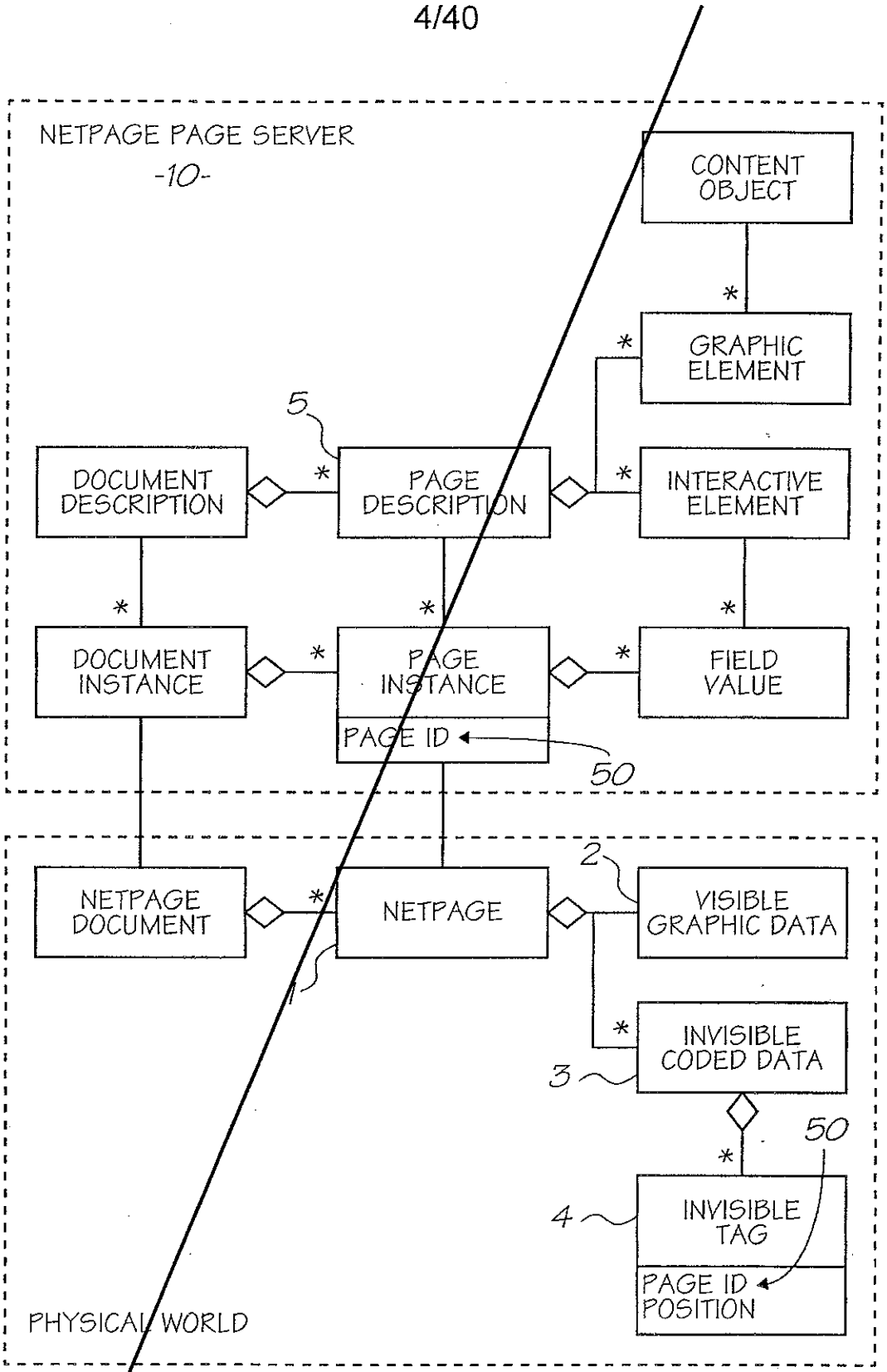
NETPAGE PAGE SERVER
-10-
CONTENT OBJECT
GRAPHIC ELEMENT
INTERACTIVE ELEMENT
FIELD VALUE
DOCUMENT DESCRIPTION
PAGE DESCRIPTION
DOCUMENT INSTANCE
PAGE INSTANCE
PAGE ID
50
5
NETPAGE DOCUMENT
NETPAGE
VISIBLE GRAPHIC DATA
INVISIBLE CODED DATA
INVISIBLE TAG
PAGE ID POSITION
1
2
3
4
PHYSICAL WORLD

FIG. 4

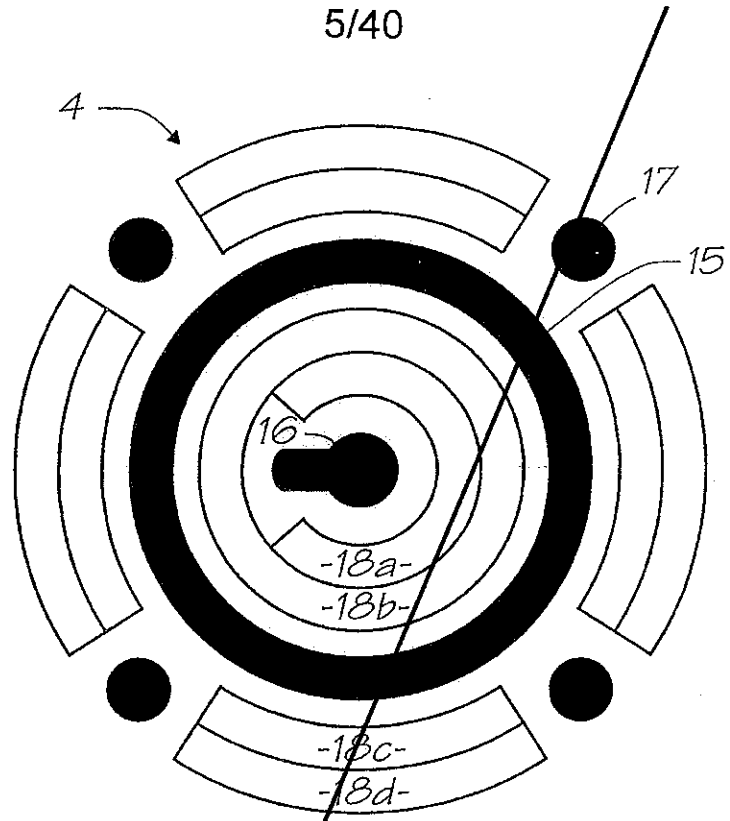

FIG. 5

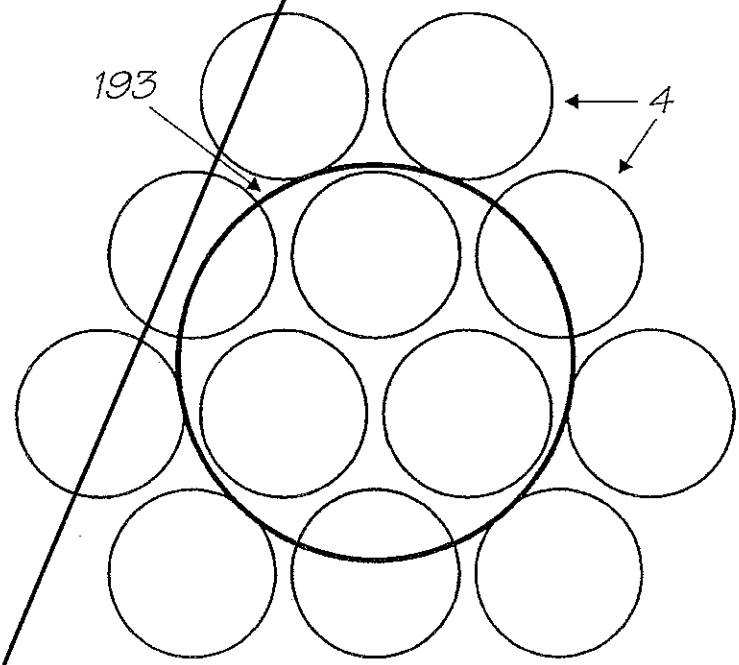

FIG. 6

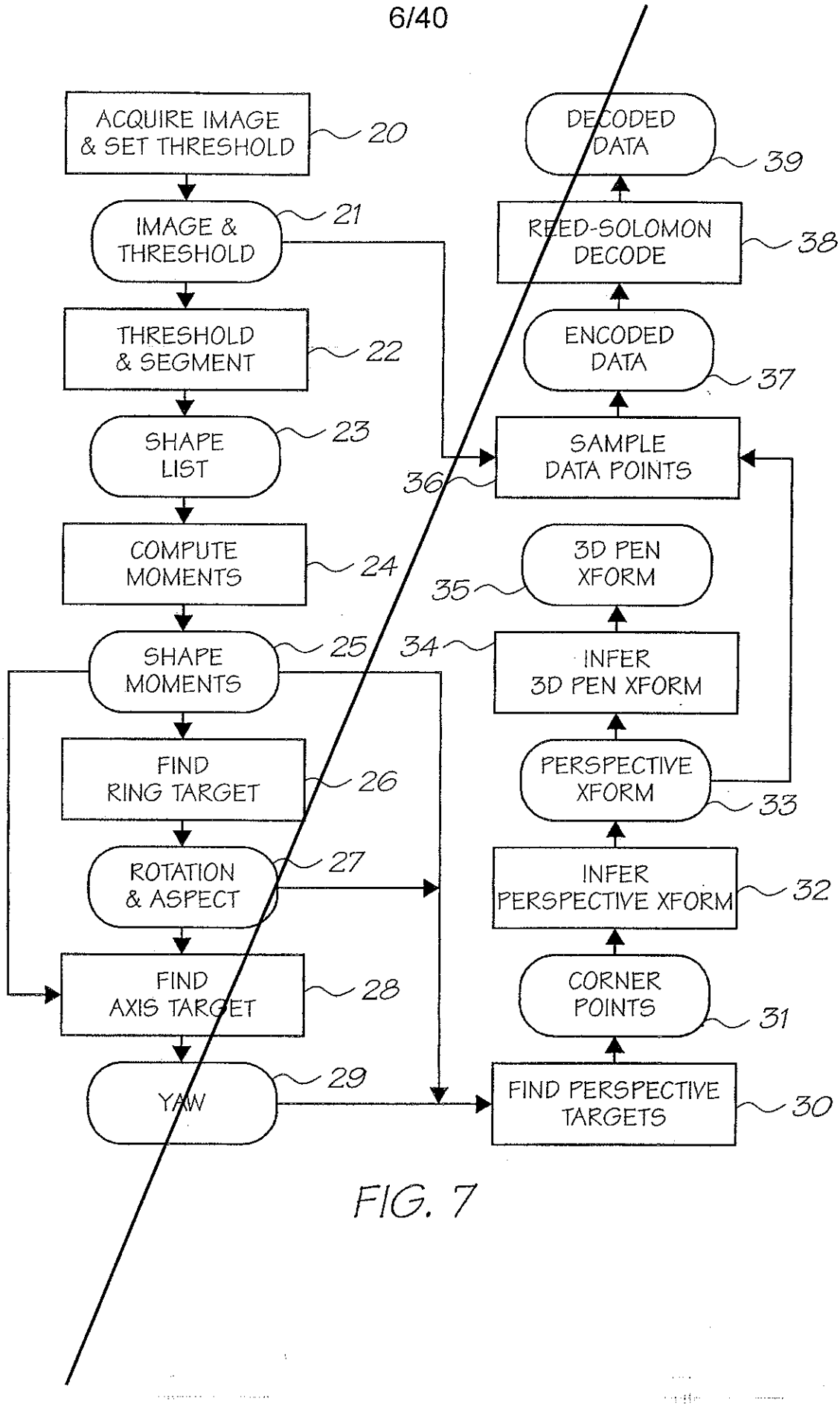
ACQUIRE IMAGE & SET THRESHOLD
20
IMAGE & THRESHOLD
21
THRESHOLD & SEGMENT
22
SHAPE LIST
23
COMPUTE MOMENTS
24
SHAPE MOMENTS
25
FIND RING TARGET
26
ROTATION & ASPECT
27
FIND AXIS TARGET
28
YAW
29
FIND PERSPECTIVE TARGETS
30
CORNER POINTS
31
INFER PERSPECTIVE XFORM
32
PERSPECTIVE XFORM
33
INFER 3D PEN XFORM
34
3D PEN XFORM
35
SAMPLE DATA POINTS
36
ENCODED DATA
37
REED-SOLOMON DECODE
38
DECODED DATA
39

FIG. 7

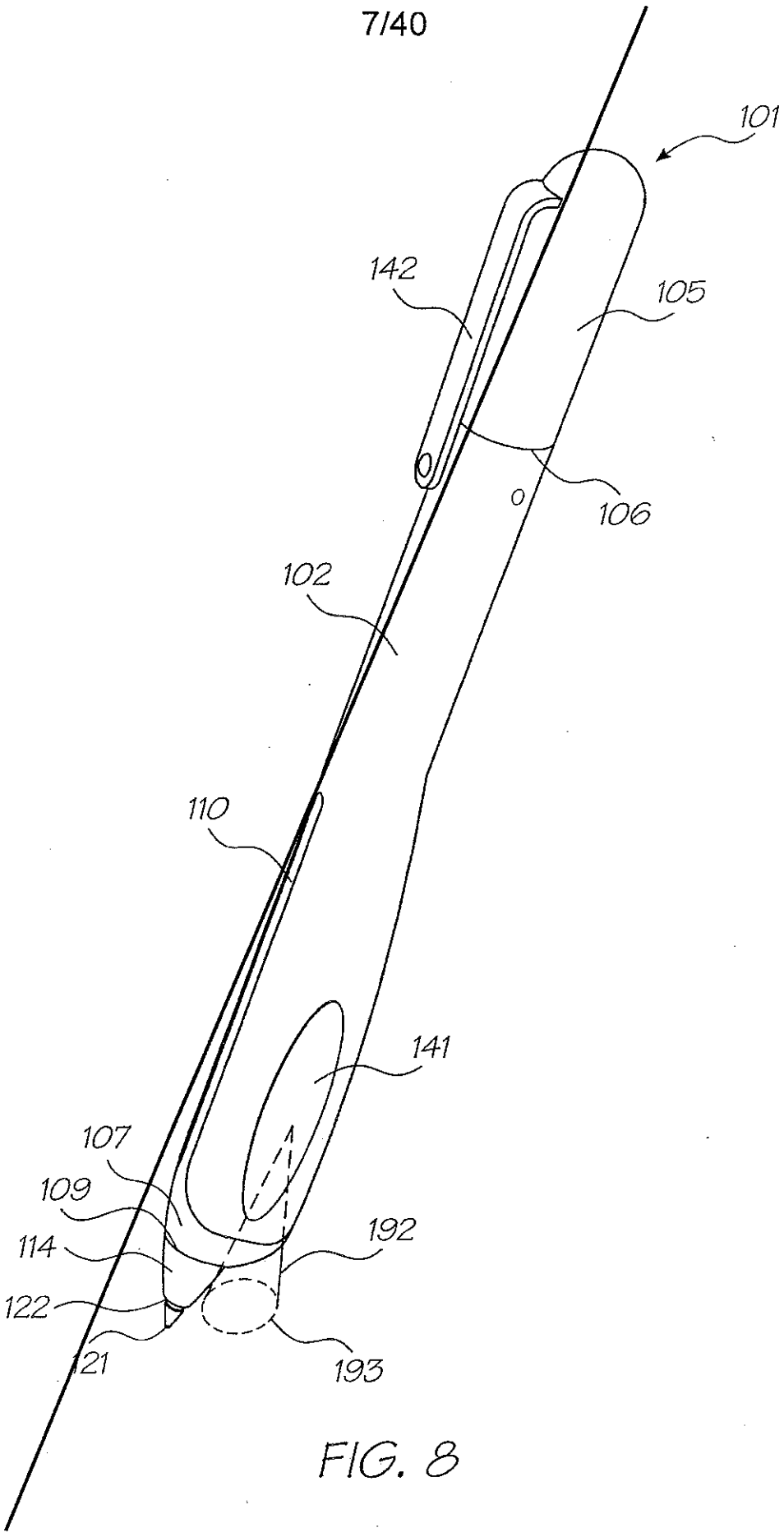

FIG. 8

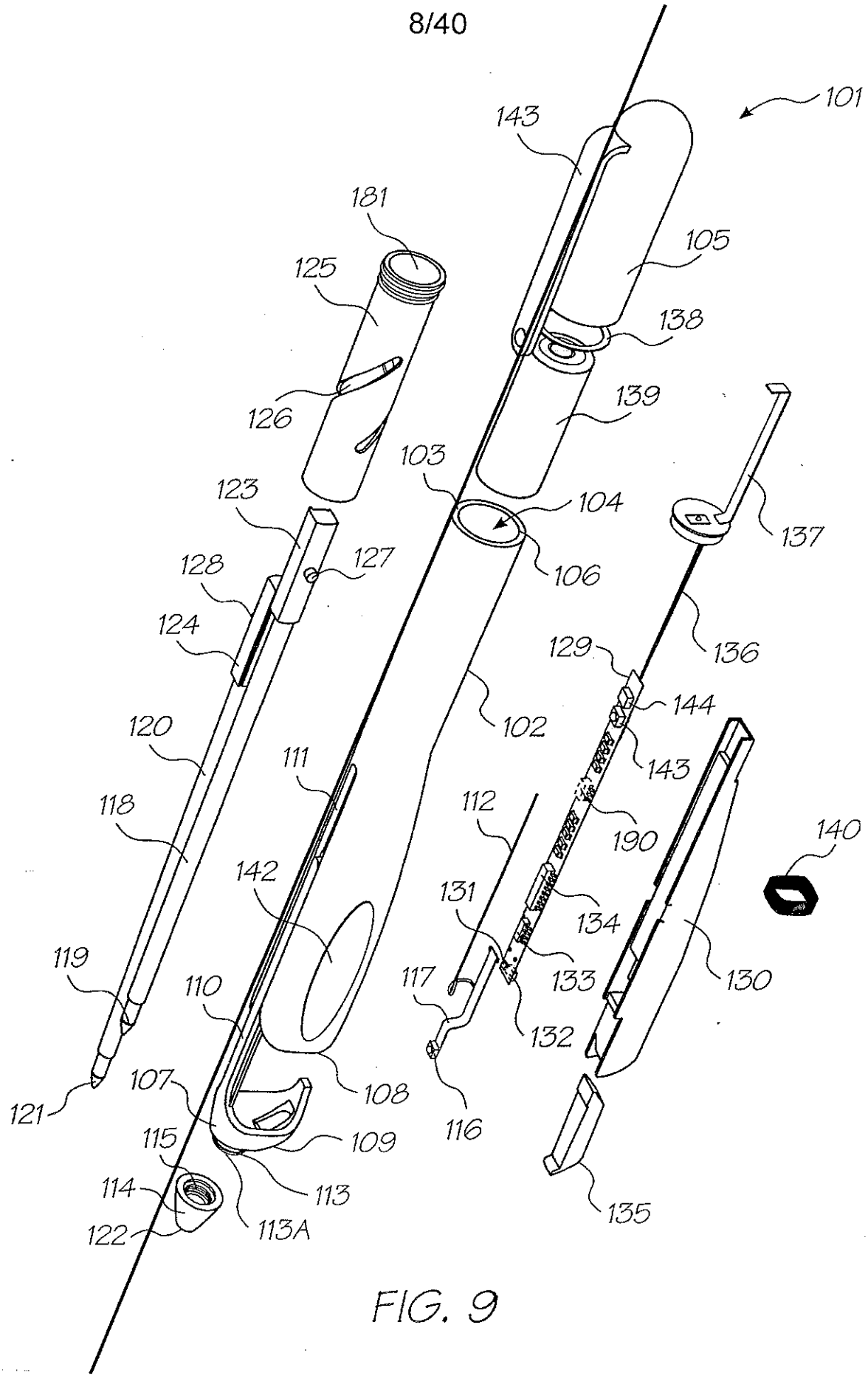
101
143
181
105
125
138
126
139
103
104
123
137
128
127
106
124
136
129
102
144
120
143
111
112
118
190
140
142
131
134
119
133
130
110
117
132
107
108
116
121
109
115
113
114
135
122
113A

FIG. 9

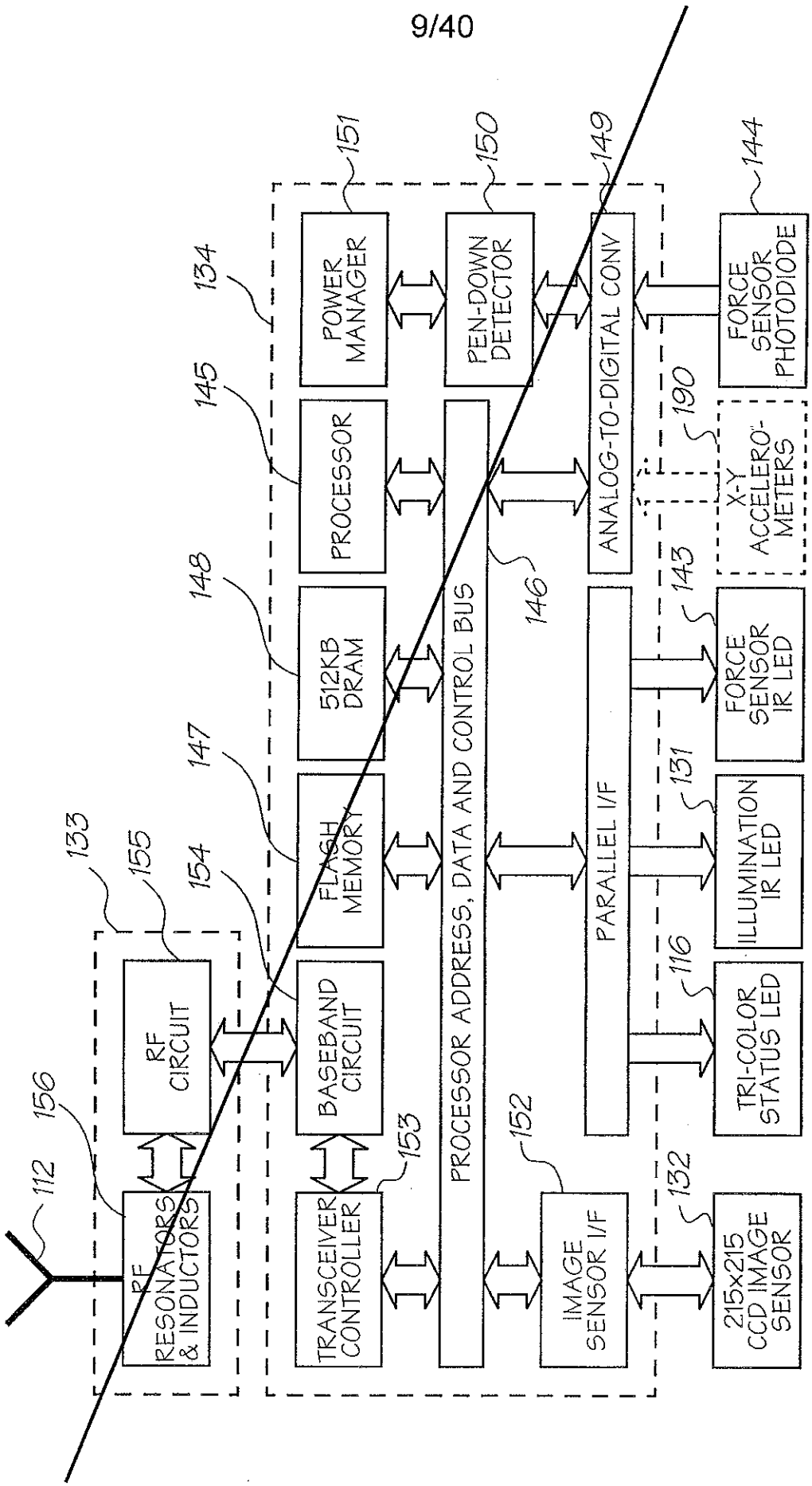
112
156
RF RESONATORS & INDUCTORS
133
155
RF CIRCUIT
154
BASEBAND CIRCUIT
147
FLASH MEMORY
148
512KB DRAM
145
PROCESSOR
134
POWER MANAGER
151
PEN-DOWN DETECTOR
150
ANALOG-TO-DIGITAL CONV
149
PROCESSOR ADDRESS, DATA AND CONTROL BUS
146
TRANSCEIVER CONTROLLER
153
PARALLEL I/F
IMAGE SENSOR I/F
152
FORCE SENSOR PHOTODIODE
144
X-Y ACCELERO-METERS
190
FORCE SENSOR IR LED
143
ILLUMINATION IR LED
131
TRI-COLOR STATUS LED
116
215x215 CCD IMAGE SENSOR
132

FIG. 10

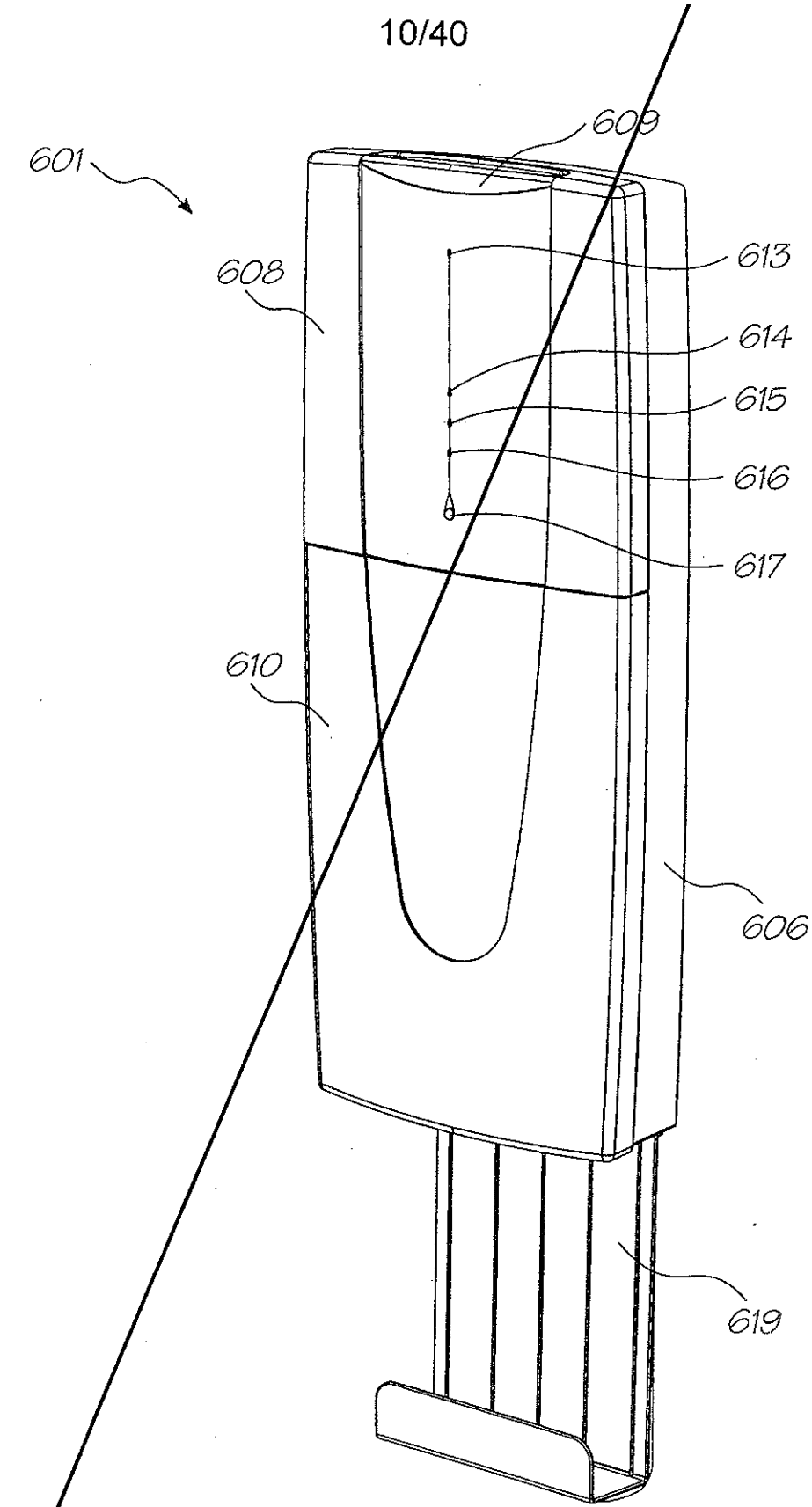

FIG. 11

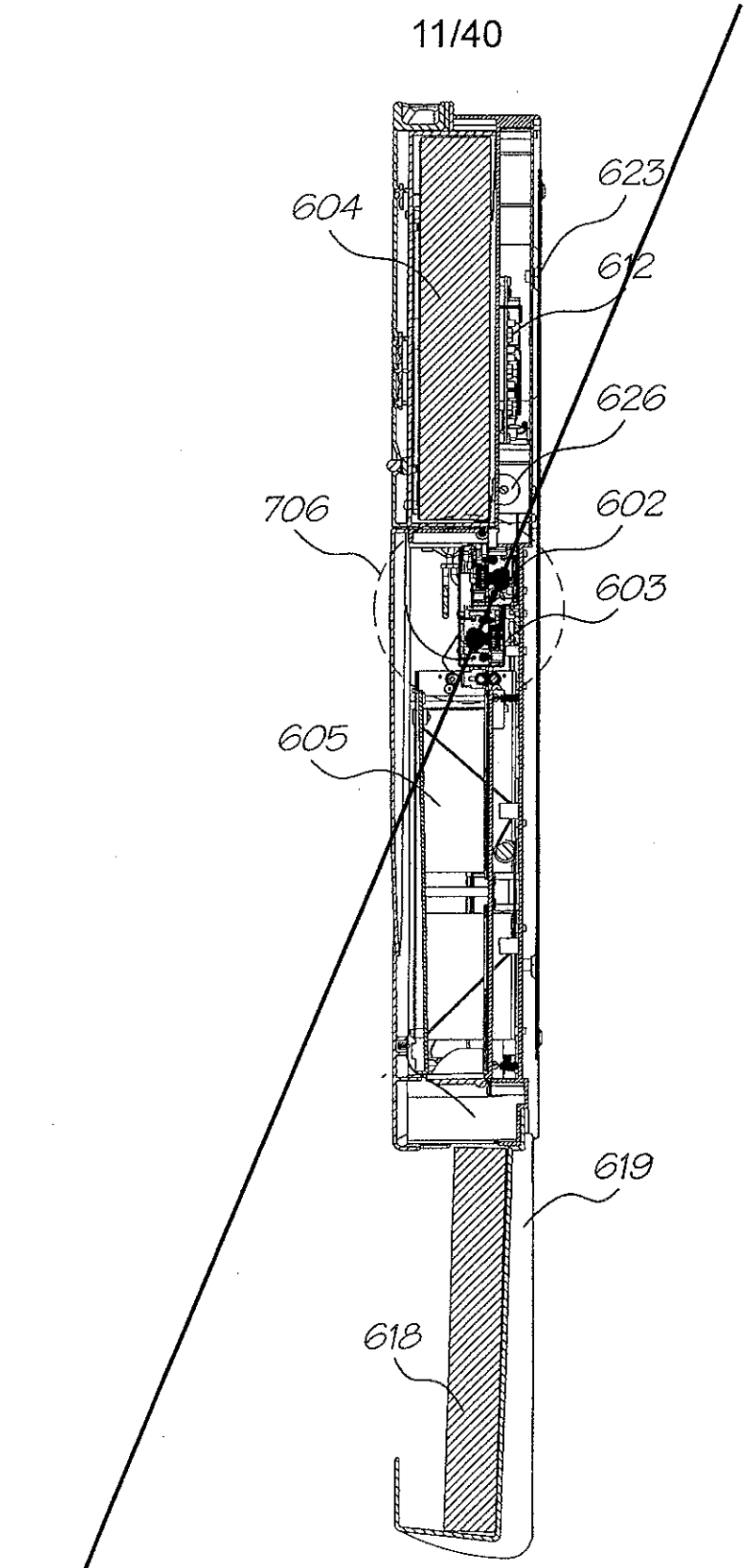

FIG. 12

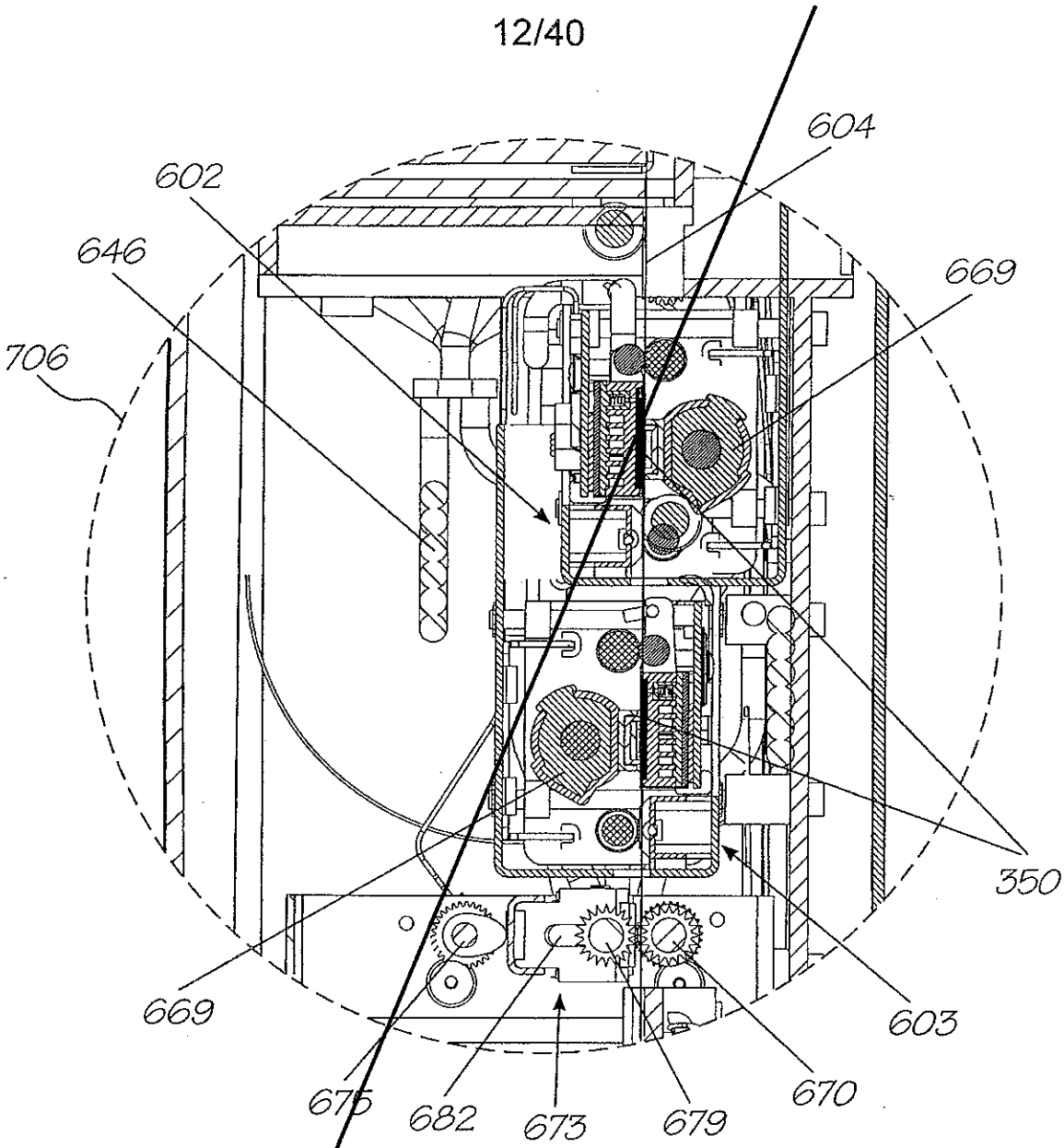

FIG. 12a

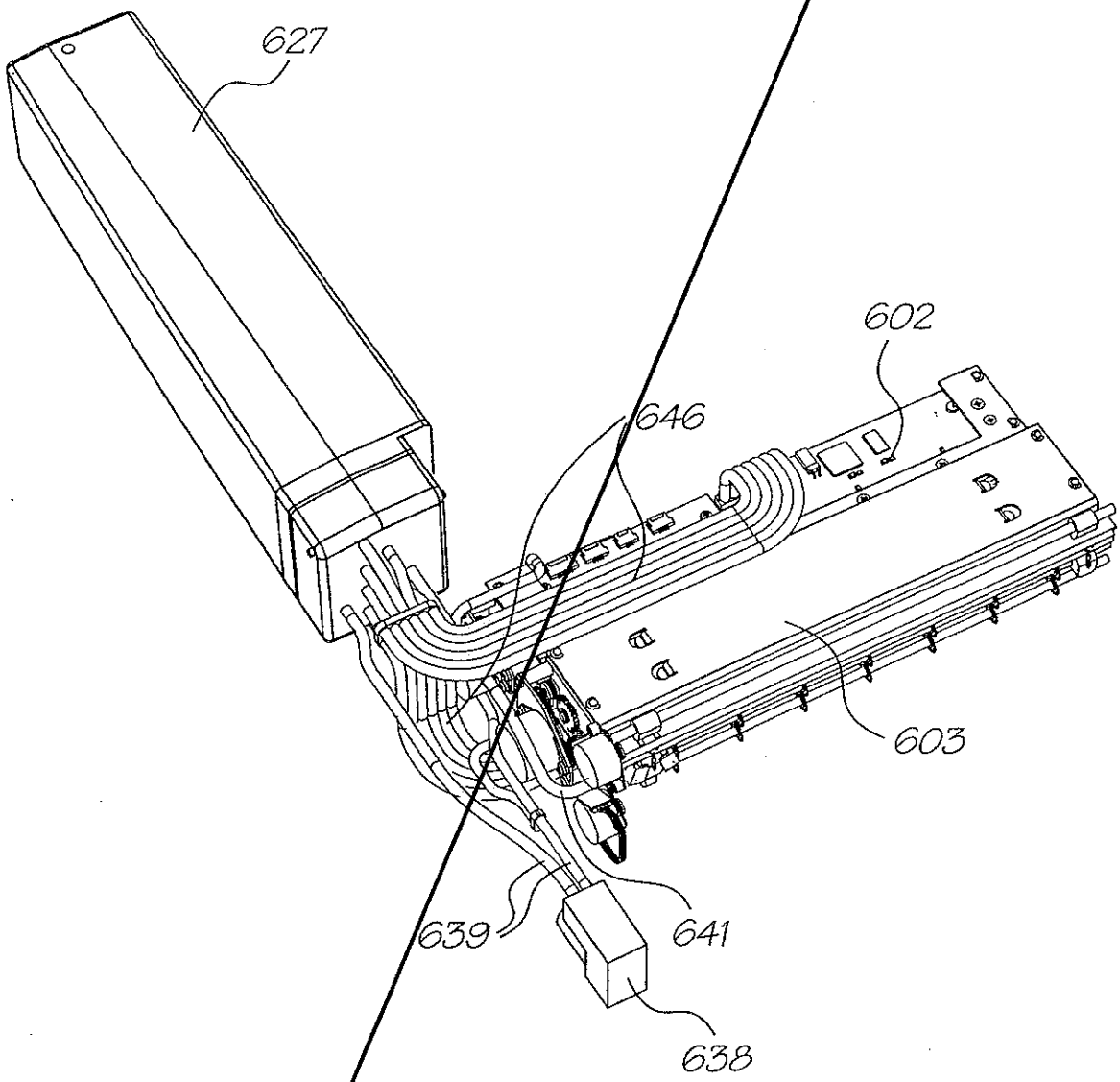

FIG. 13

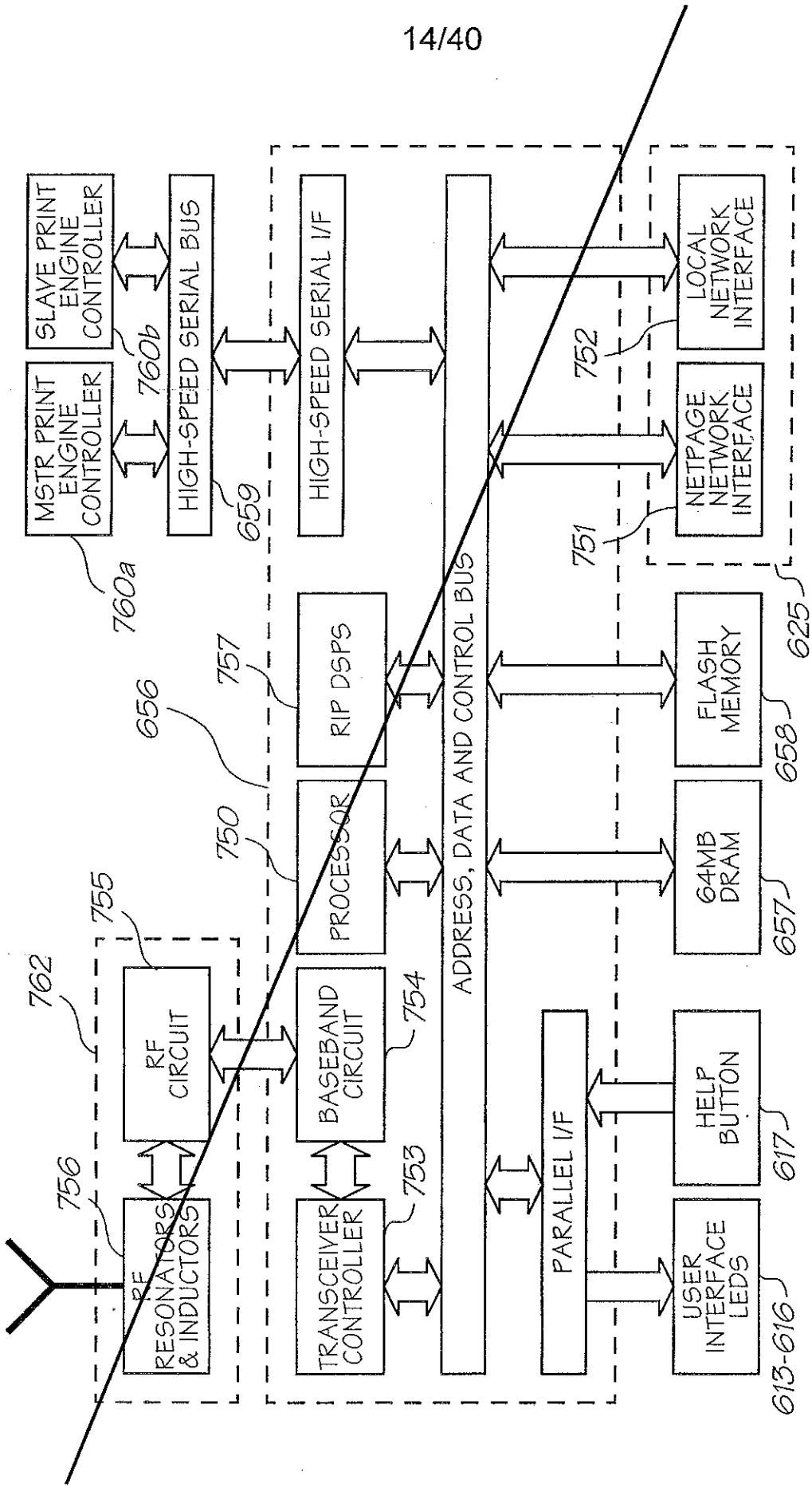
SLAVE PRINT ENGINE CONTROLLER
MSTR PRINT ENGINE CONTROLLER
HIGH-SPEED SERIAL BUS
HIGH-SPEED SERIAL I/F
LOCAL NETWORK INTERFACE
NETPAGE NETWORK INTERFACE
RIP DSPS
PROCESSOR
ADDRESS, DATA AND CONTROL BUS
FLASH MEMORY
64MB DRAM
RF CIRCUIT
BASEBAND CIRCUIT
TRANSCEIVER CONTROLLER
PARALLEL I/F
HELP BUTTON
USER INTERFACE LEDS
RF RESONATORS & INDUCTORS
760a
760b
659
752
751
757
656
750
625
658
657
755
762
754
753
756
617
613-616

FIG. 14

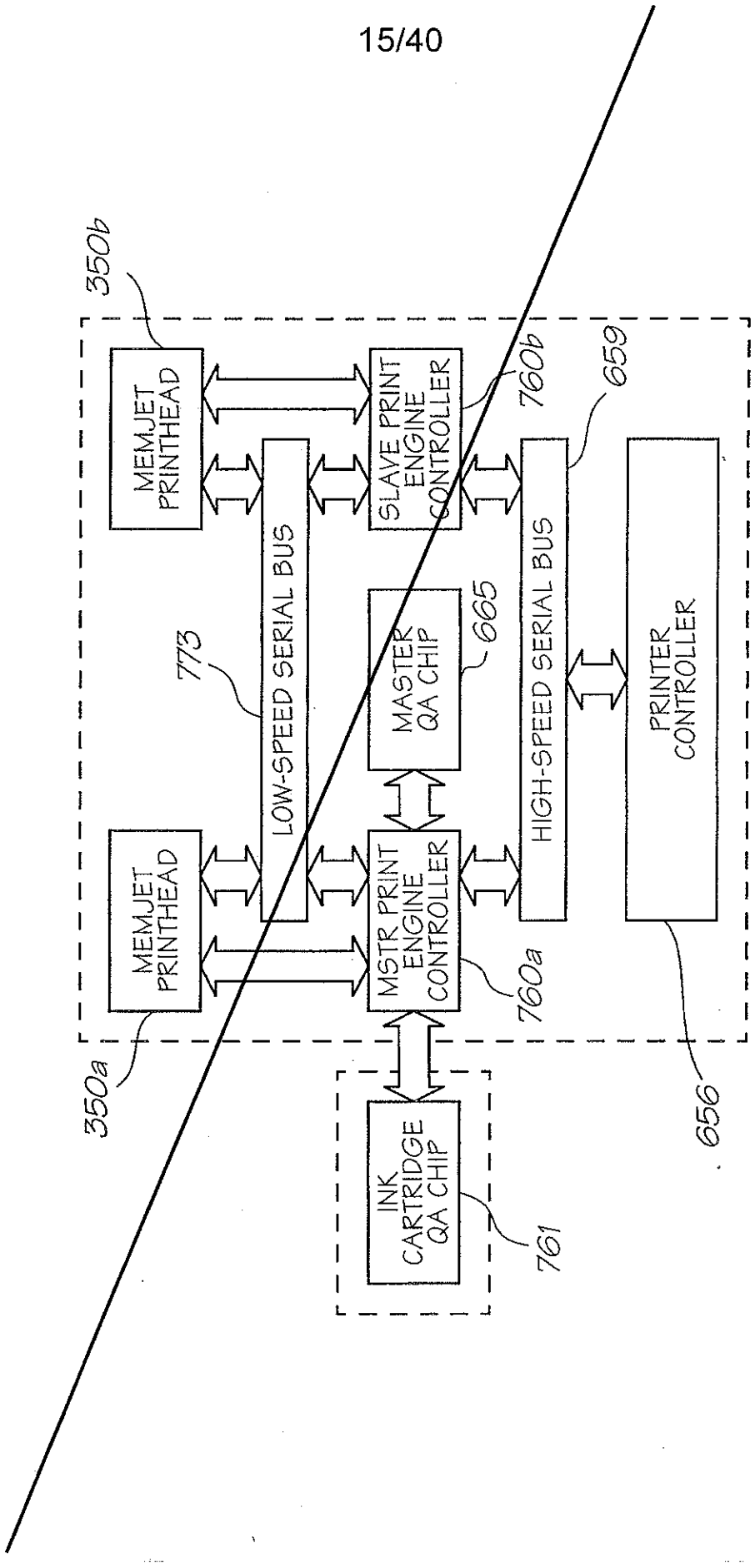
350b
MEMJET PRINTHEAD
SLAVE PRINT ENGINE CONTROLLER
760b
659
773
LOW-SPEED SERIAL BUS
MASTER QA CHIP
665
HIGH-SPEED SERIAL BUS
PRINTER CONTROLLER
MEMJET PRINTHEAD
MSTR PRINT ENGINE CONTROLLER
760a
350a
656
INK CARTRIDGE QA CHIP
761

FIG. 15

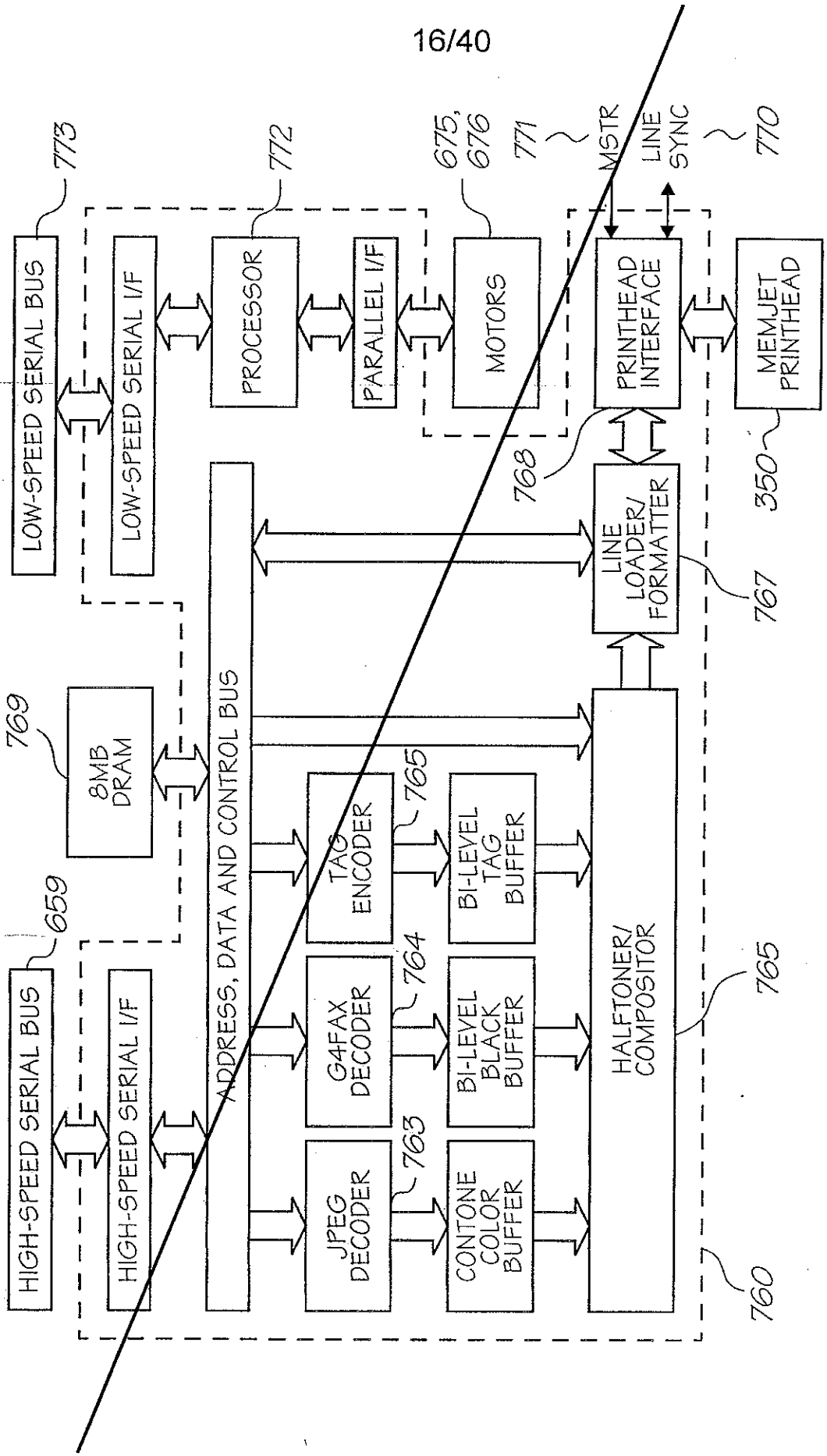
HIGH-SPEED SERIAL BUS
HIGH-SPEED SERIAL I/F
659
ADDRESS, DATA AND CONTROL BUS
8MB DRAM
769
JPEG DECODER
763
G4FAX DECODER
764
TAG ENCODER
765
CONTONE COLOR BUFFER
BI-LEVEL BLACK BUFFER
BI-LEVEL TAG BUFFER
HALFTONER/ COMPOSITOR
765
760
LINE LOADER/ FORMATTER
767
768
PRINTHEAD INTERFACE
MSTR
LINE SYNC
771
770
MEMJET PRINTHEAD
350
LOW-SPEED SERIAL BUS
LOW-SPEED SERIAL I/F
773
PROCESSOR
772
PARALLEL I/F
MOTORS
675, 676

FIG. 16

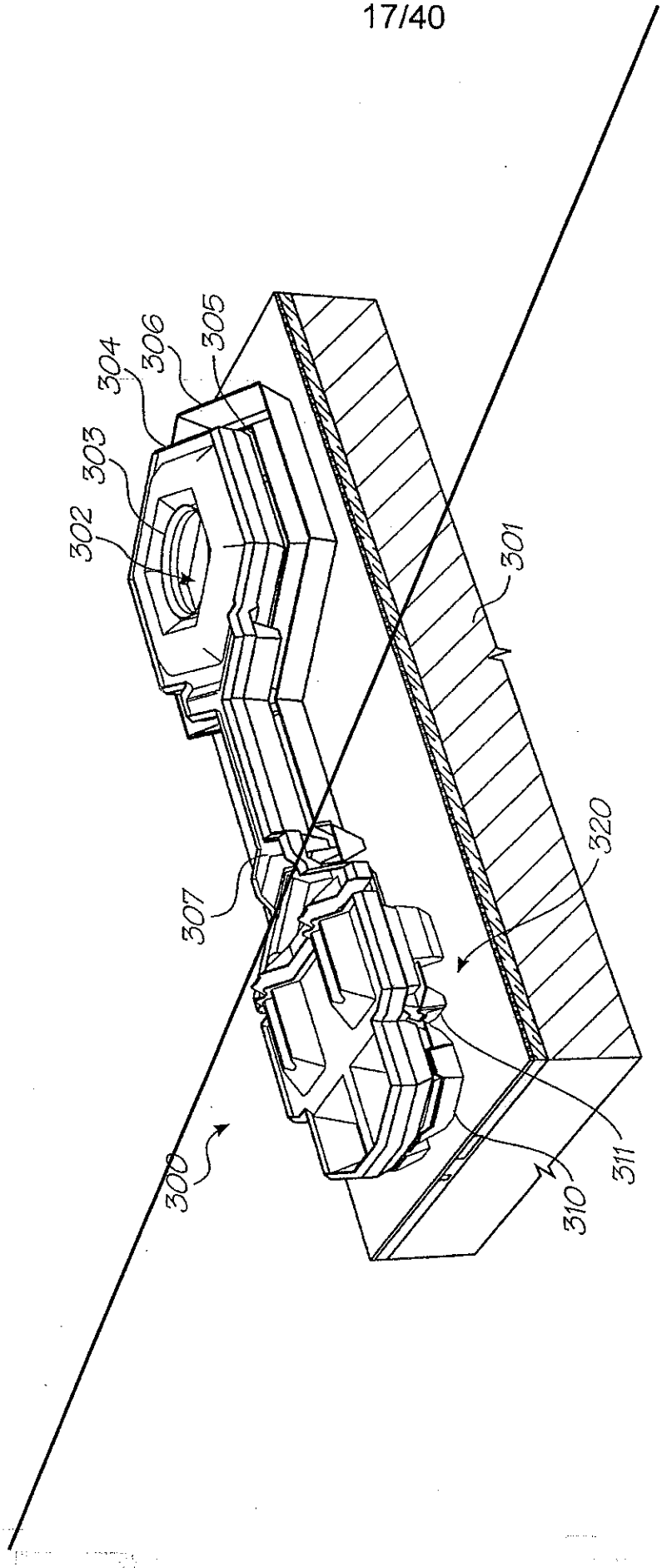

FIG. 17

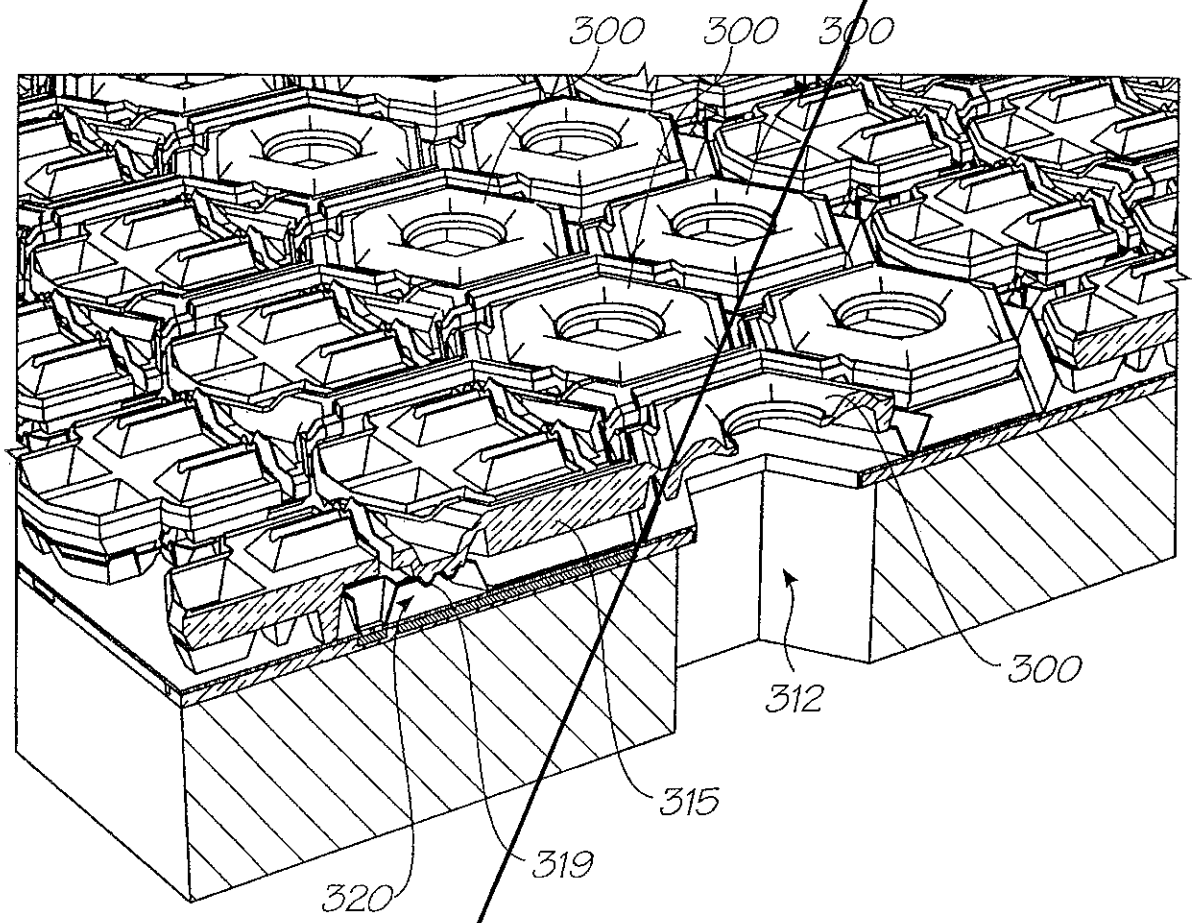

FIG. 18

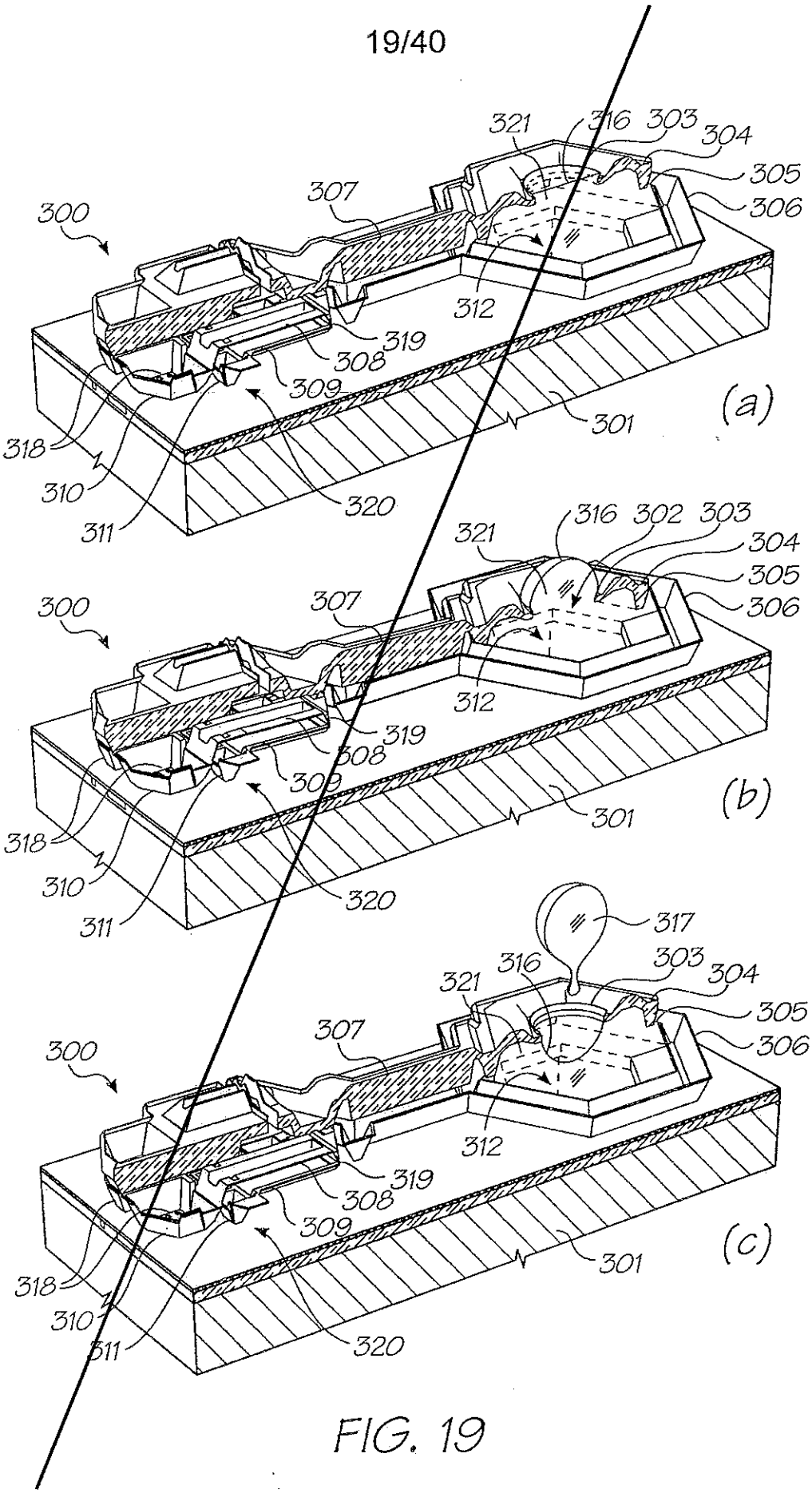
300
307
321
316
303
304
305
306
312
319
308
309
318
310
311
320
301
(a)
(b)
(c)
302
317

FIG. 19

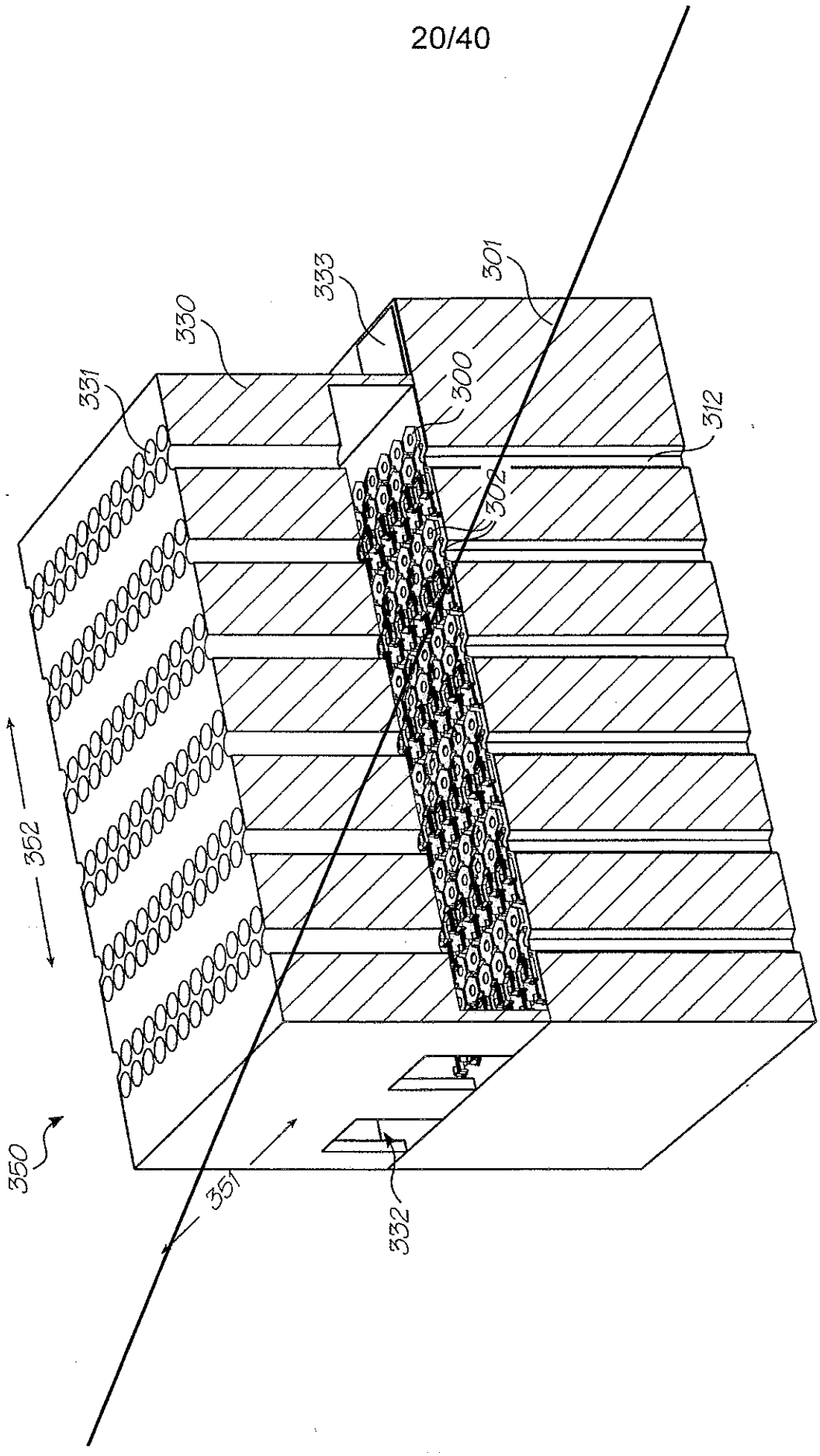

FIG. 20

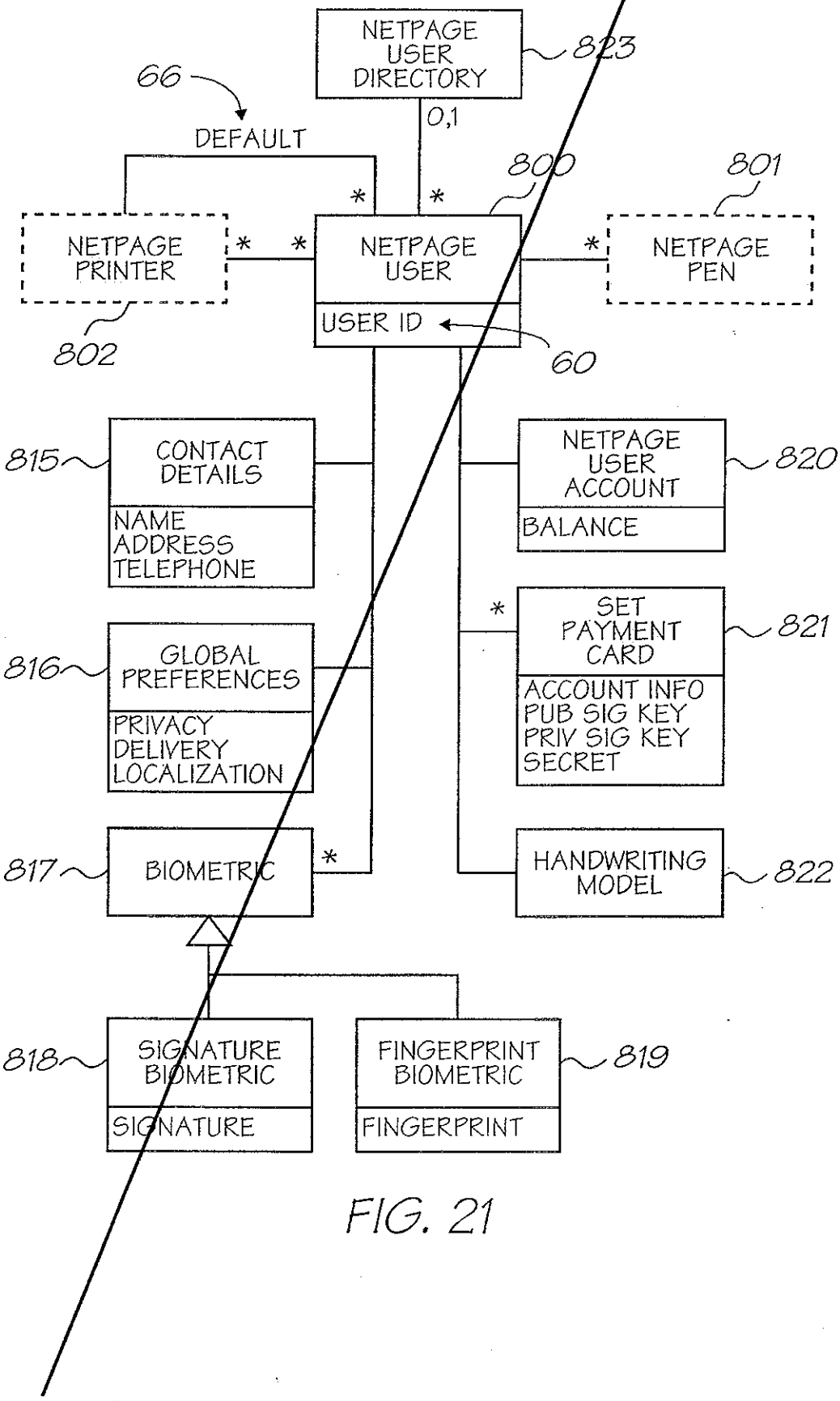
NETPAGE USER DIRECTORY
823
66
DEFAULT
0,1
800
801
NETPAGE PRINTER
NETPAGE USER
NETPAGE PEN
USER ID
60
802
815
CONTACT DETAILS
NAME
ADDRESS
TELEPHONE
NETPAGE USER ACCOUNT
820
BALANCE
SET PAYMENT CARD
821
ACCOUNT INFO
PUB SIG KEY
PRIV SIG KEY
SECRET
816
GLOBAL PREFERENCES
PRIVACY
DELIVERY
LOCALIZATION
817
BIOMETRIC
HANDWRITING MODEL
822
818
SIGNATURE BIOMETRIC
SIGNATURE
FINGERPRINT BIOMETRIC
819
FINGERPRINT

FIG. 21

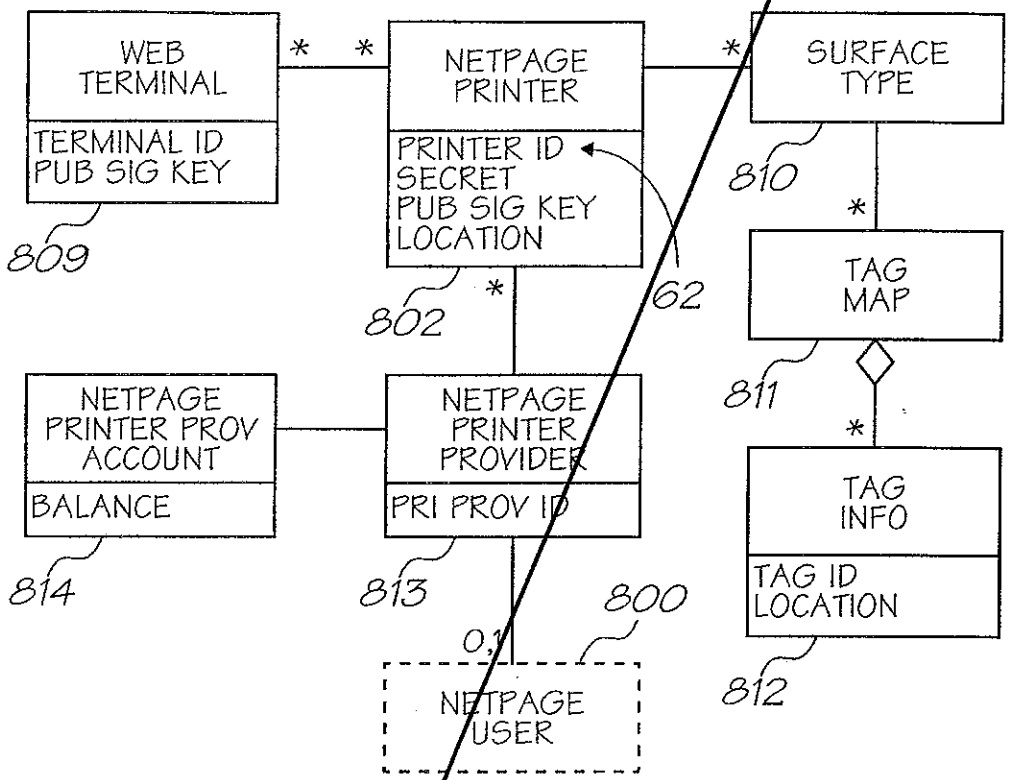
WEB TERMINAL
TERMINAL ID
PUB SIG KEY
809
NETPAGE PRINTER
PRINTER ID
SECRET
PUB SIG KEY
LOCATION
802
62
SURFACE TYPE
810
TAG MAP
811
TAG INFO
TAG ID
LOCATION
812
NETPAGE PRINTER PROV ACCOUNT
BALANCE
814
NETPAGE PRINTER PROVIDER
PRI PROV ID
813
800
0,1
NETPAGE USER

FIG. 22

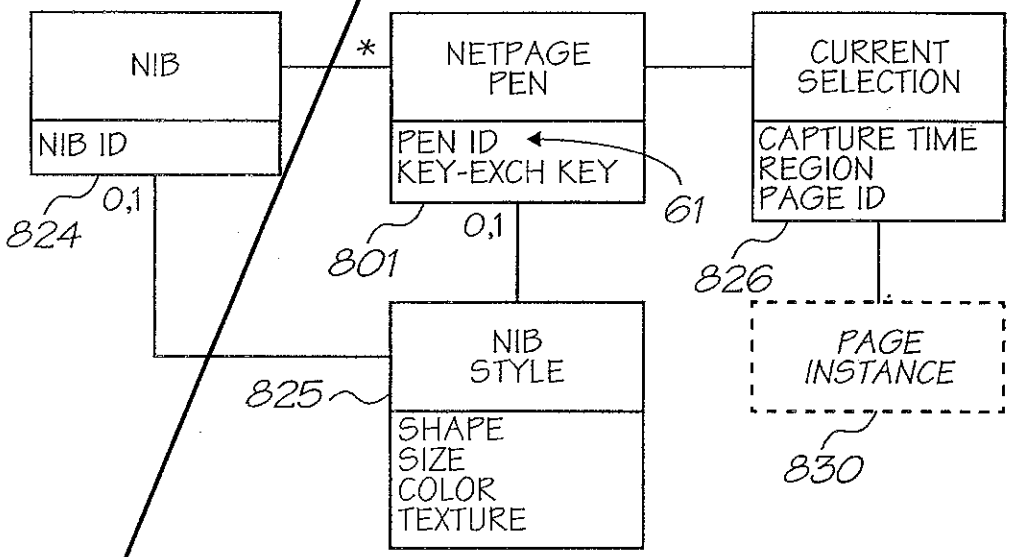
NIB
NIB ID
824
0,1
NETPAGE PEN
PEN ID
KEY-EXCH KEY
801
0,1
61
CURRENT SELECTION
CAPTURE TIME
REGION
PAGE ID
826
NIB STYLE
825
SHAPE
SIZE
COLOR
TEXTURE
PAGE INSTANCE
830

FIG. 23

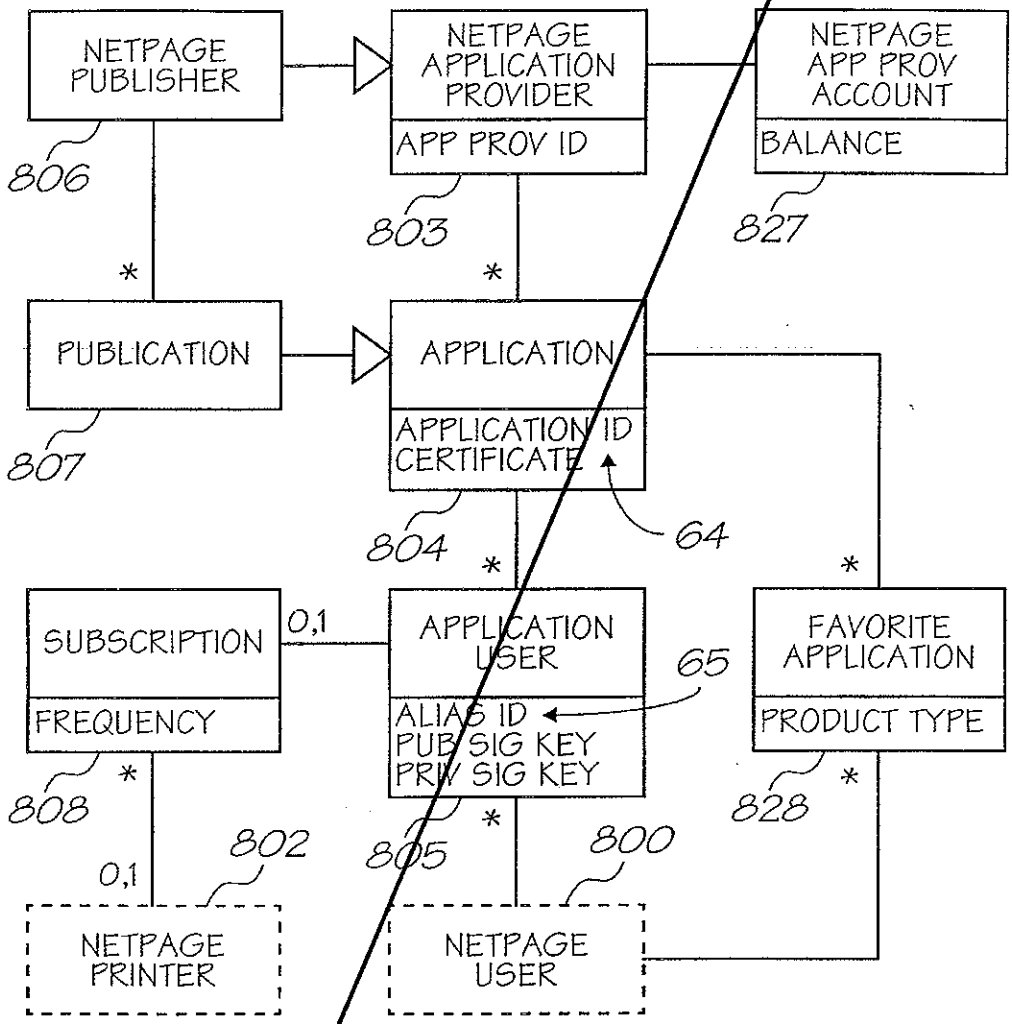
NETPAGE PUBLISHER
806
NETPAGE APPLICATION PROVIDER
APP PROV ID
803
NETPAGE APP PROV ACCOUNT
BALANCE
827
PUBLICATION
807
APPLICATION
APPLICATION ID
CERTIFICATE
804
64
SUBSCRIPTION
FREQUENCY
808
0,1
APPLICATION USER
ALIAS ID
PUB SIG KEY
PRIV SIG KEY
805
65
FAVORITE APPLICATION
PRODUCT TYPE
828
802
800
NETPAGE PRINTER
NETPAGE USER
*
0,1

FIG. 24

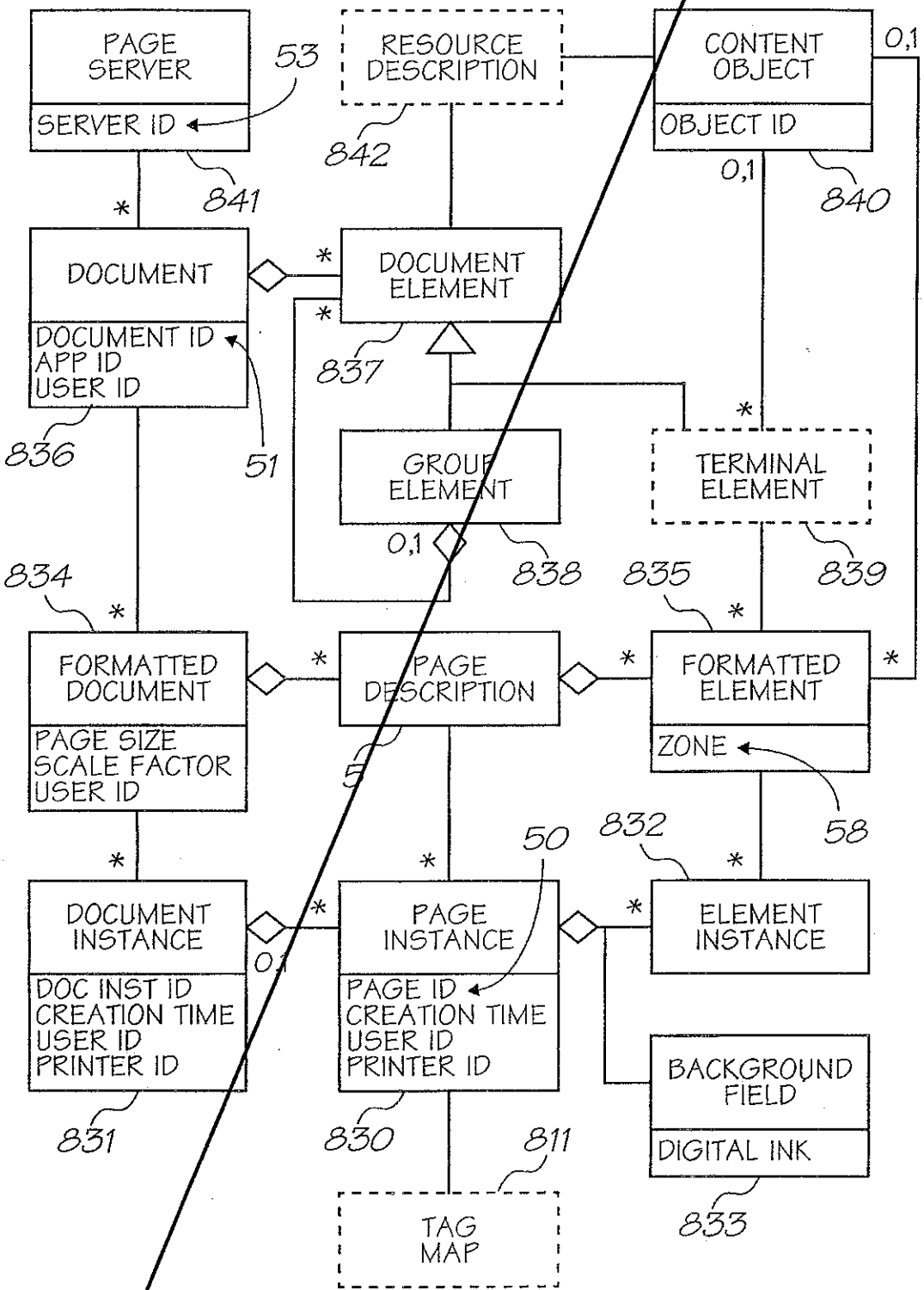
PAGE SERVER
SERVER ID
53
RESOURCE DESCRIPTION
842
CONTENT OBJECT
OBJECT ID
0,1
0,1
841
840
DOCUMENT
DOCUMENT ID
APP ID
USER ID
836
51
DOCUMENT ELEMENT
837
GROUP ELEMENT
0,1
838
TERMINAL ELEMENT
839
834
835
FORMATTED DOCUMENT
PAGE SIZE
SCALE FACTOR
USER ID
PAGE DESCRIPTION
5
FORMATTED ELEMENT
ZONE
58
50
832
DOCUMENT INSTANCE
DOC INST ID
CREATION TIME
USER ID
PRINTER ID
831
PAGE INSTANCE
PAGE ID
CREATION TIME
USER ID
PRINTER ID
830
ELEMENT INSTANCE
BACKGROUND FIELD
DIGITAL INK
833
811
TAG MAP

FIG. 25

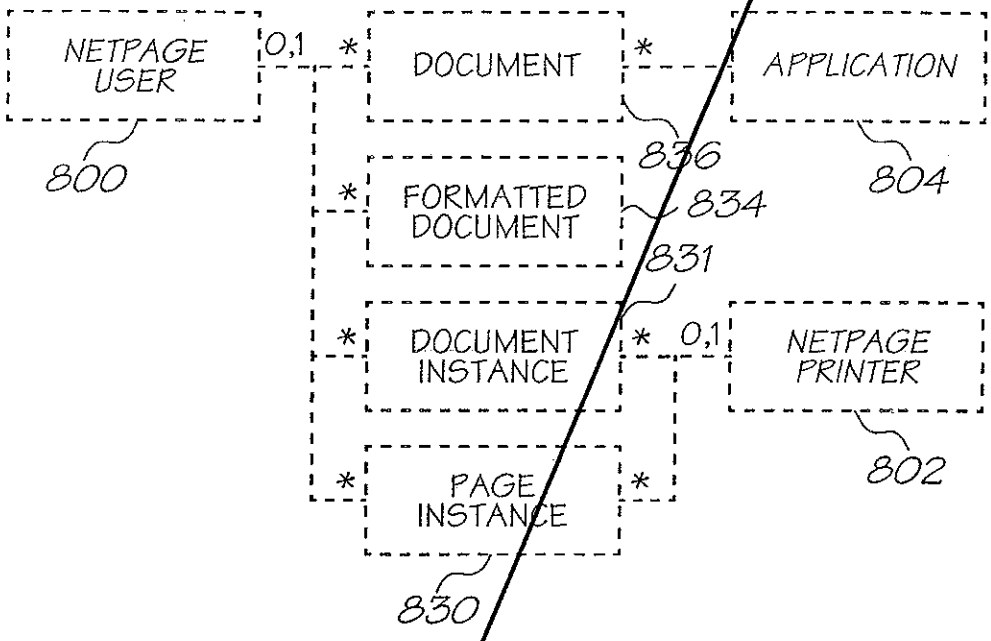
NETPAGE USER
0,1
*
DOCUMENT
*
APPLICATION
800
836
804
*
FORMATTED DOCUMENT
834
831
*
DOCUMENT INSTANCE
*
0,1
NETPAGE PRINTER
802
*
PAGE INSTANCE
*
830

FIG. 26

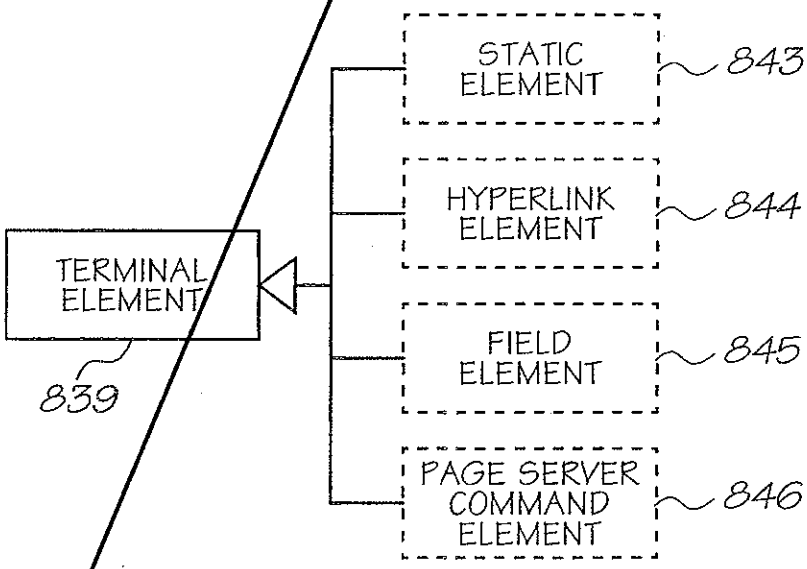
STATIC ELEMENT
843
HYPERLINK ELEMENT
844
TERMINAL ELEMENT
FIELD ELEMENT
845
839
PAGE SERVER COMMAND ELEMENT
846

FIG. 27

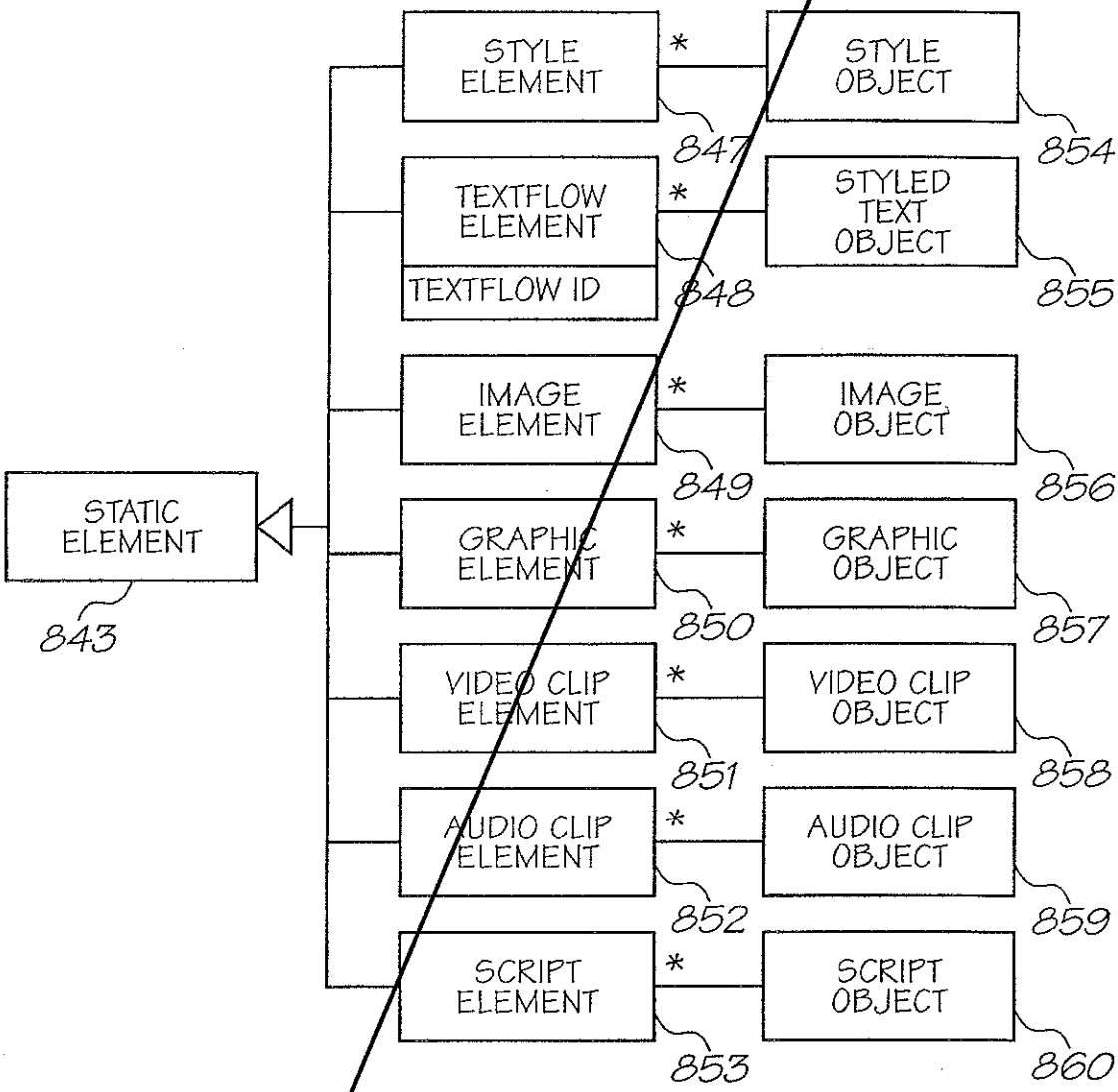
STATIC ELEMENT
843
STYLE ELEMENT
847
STYLE OBJECT
854
TEXTFLOW ELEMENT
TEXTFLOW ID
848
STYLED TEXT OBJECT
855
IMAGE ELEMENT
849
IMAGE OBJECT
856
GRAPHIC ELEMENT
850
GRAPHIC OBJECT
857
VIDEO CLIP ELEMENT
851
VIDEO CLIP OBJECT
858
AUDIO CLIP ELEMENT
852
AUDIO CLIP OBJECT
859
SCRIPT ELEMENT
853
SCRIPT OBJECT
860
*

FIG. 28

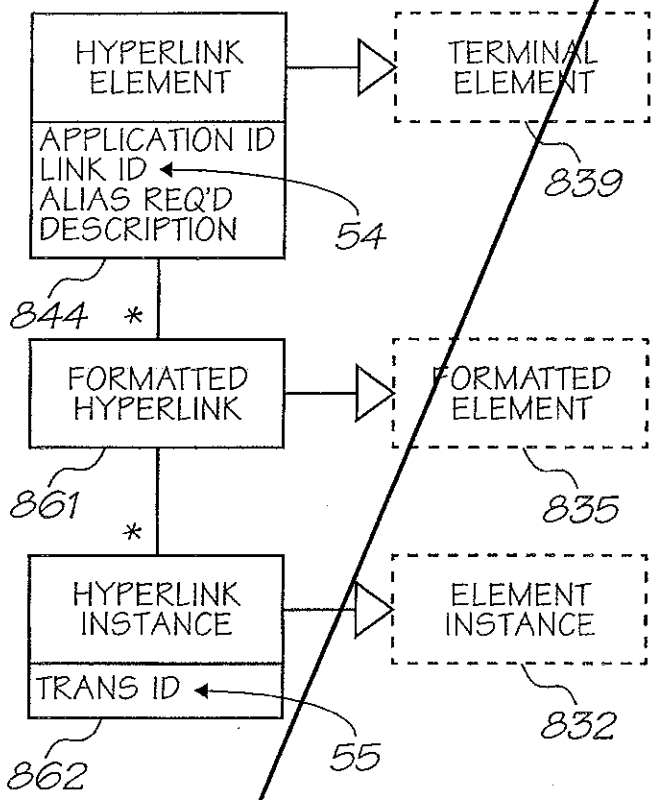
HYPERLINK ELEMENT
APPLICATION ID
LINK ID
ALIAS REQ'D
DESCRIPTION
TERMINAL ELEMENT
839
54
844
*
FORMATTED HYPERLINK
FORMATTED ELEMENT
861
835
*
HYPERLINK INSTANCE
TRANS ID
ELEMENT INSTANCE
832
862
55

FIG. 29

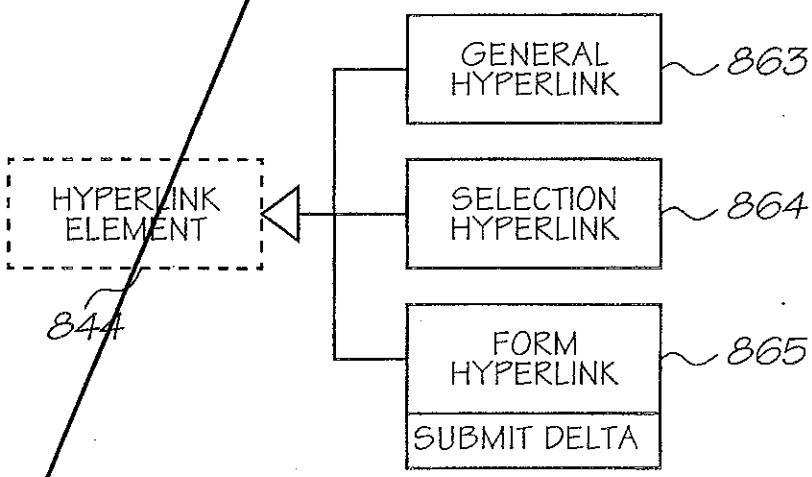
GENERAL HYPERLINK
863
HYPERLINK ELEMENT
SELECTION HYPERLINK
864
844
FORM HYPERLINK
865
SUBMIT DELTA

FIG. 30

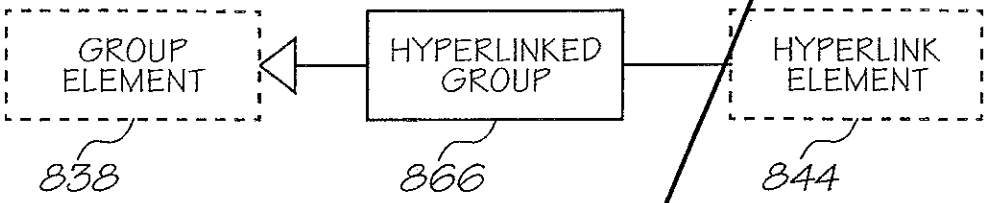
GROUP ELEMENT
HYPERLINKED GROUP
HYPERLINK ELEMENT
838
866
844

FIG. 31

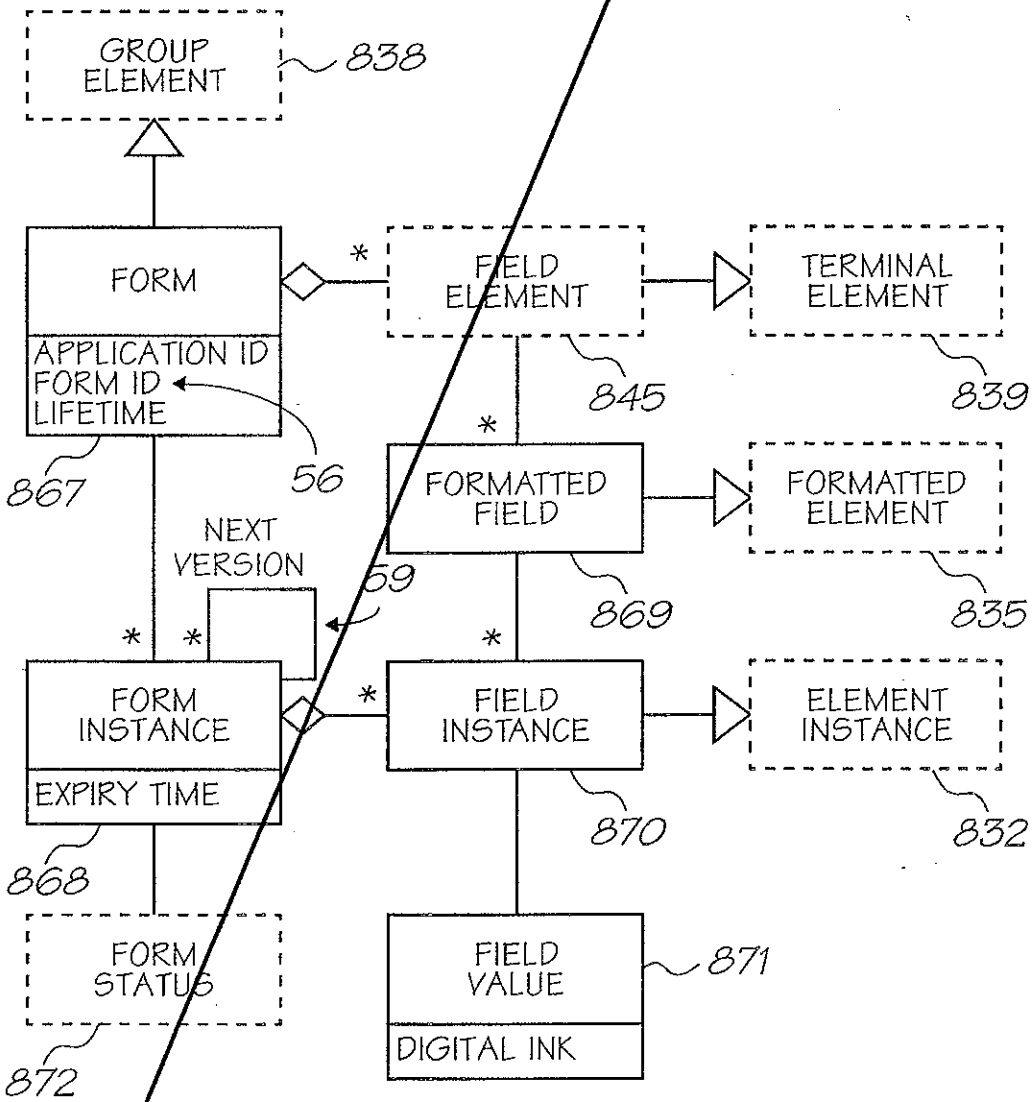
GROUP ELEMENT
838
FORM
APPLICATION ID
FORM ID
LIFETIME
867
56
*
FIELD ELEMENT
845
TERMINAL ELEMENT
839
*
FORMATTED FIELD
869
FORMATTED ELEMENT
835
NEXT VERSION
59
*
*
*
*
FORM INSTANCE
EXPIRY TIME
868
FIELD INSTANCE
870
ELEMENT INSTANCE
832
FORM STATUS
872
FIELD VALUE
DIGITAL INK
871

FIG. 32

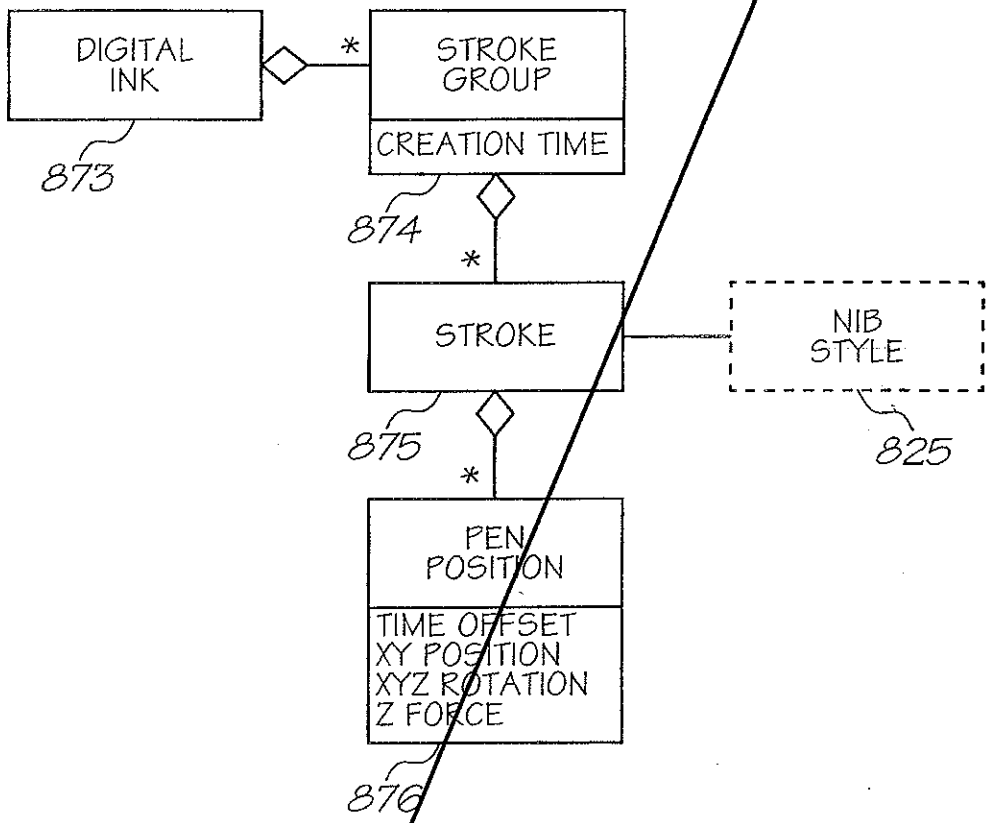
DIGITAL INK
*
STROKE GROUP
CREATION TIME
873
874
*
STROKE
NIB STYLE
875
825
*
PEN POSITION
TIME OFFSET
XY POSITION
XYZ ROTATION
Z FORCE
876

FIG. 33

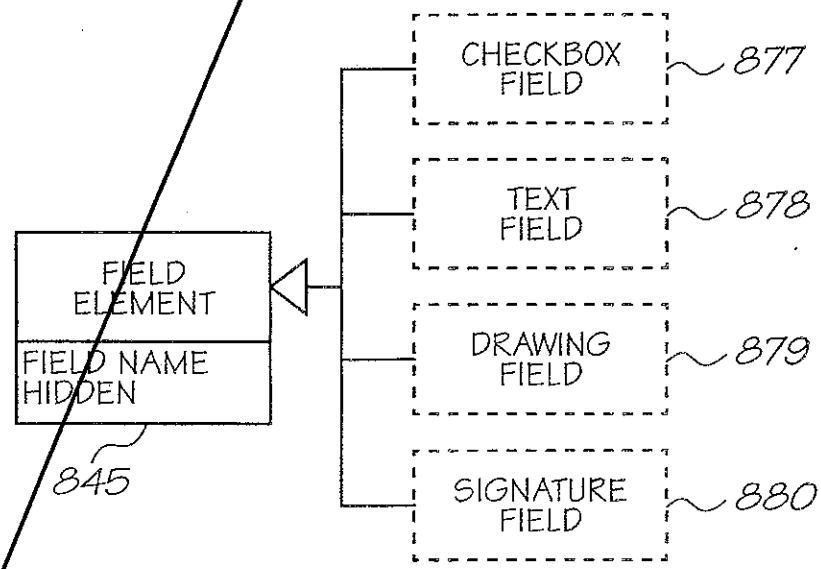
CHECKBOX FIELD
877
TEXT FIELD
878
FIELD ELEMENT
FIELD NAME
HIDDEN
DRAWING FIELD
879
SIGNATURE FIELD
880
845

FIG. 34

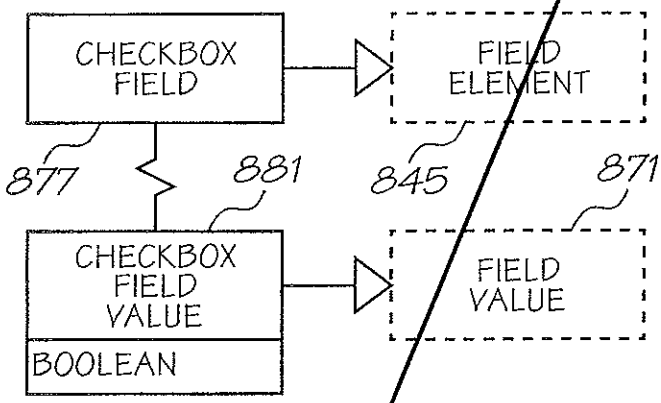

FIG. 35

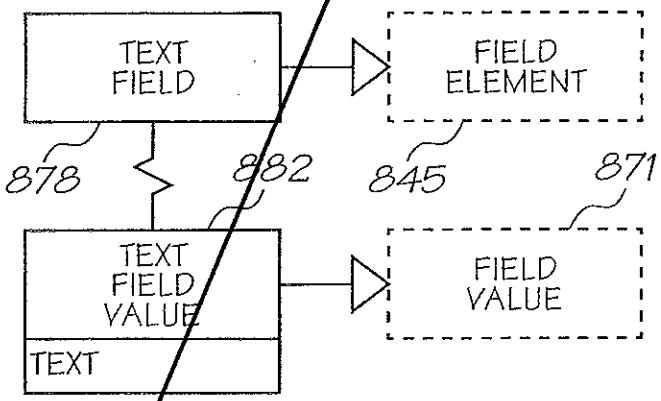

FIG. 36

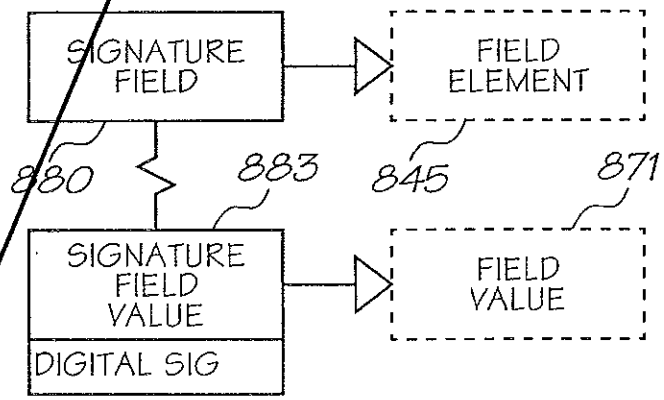

FIG. 37

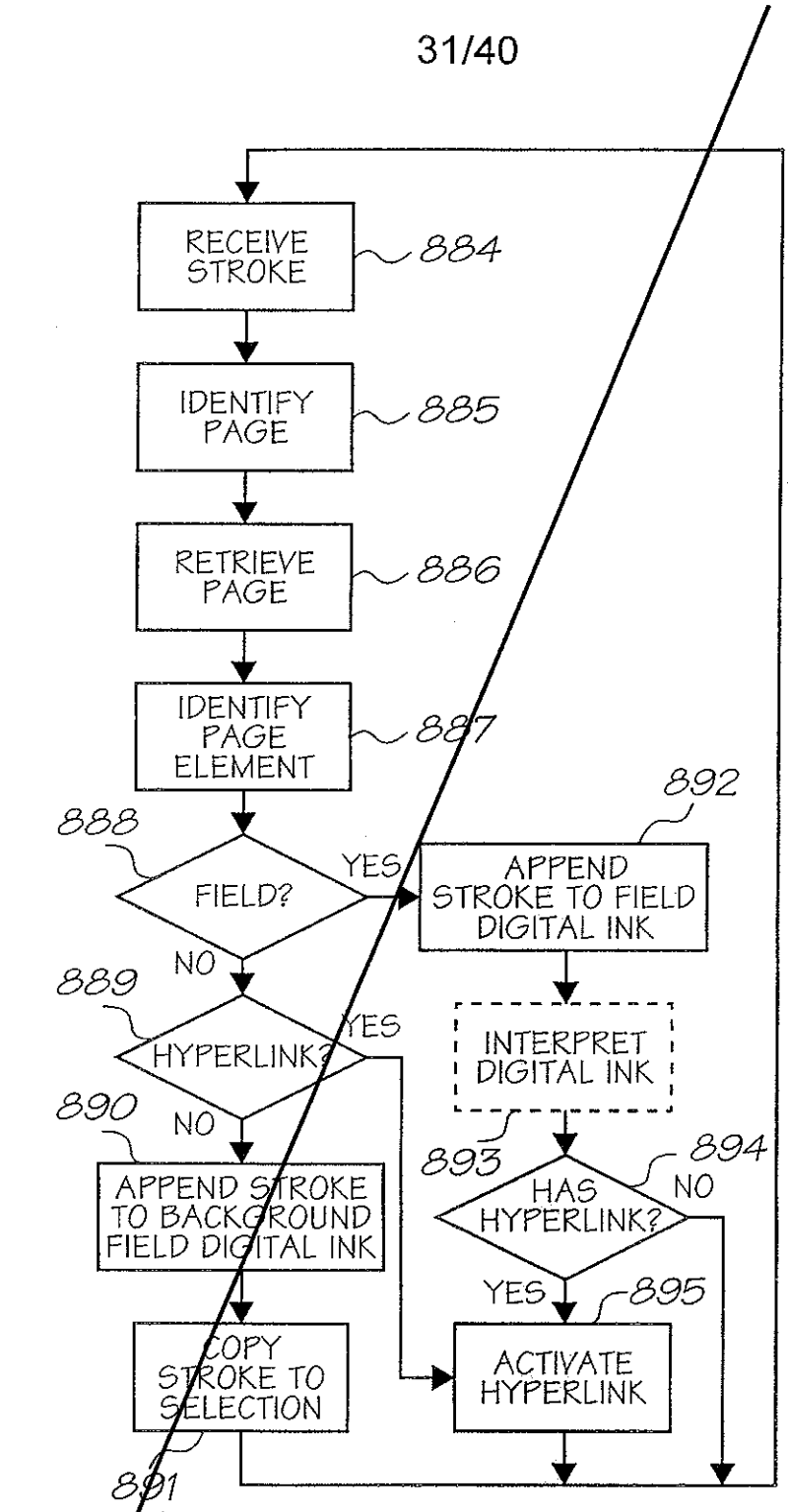
RECEIVE STROKE
884
IDENTIFY PAGE
885
RETRIEVE PAGE
886
IDENTIFY PAGE ELEMENT
887
888
FIELD?
YES
892
APPEND STROKE TO FIELD DIGITAL INK
NO
889
HYPERLINK?
YES
INTERPRET DIGITAL INK
890
NO
893
894
HAS HYPERLINK?
NO
APPEND STROKE TO BACKGROUND FIELD DIGITAL INK
YES
895
COPY STROKE TO SELECTION
ACTIVATE HYPERLINK
891

FIG. 38

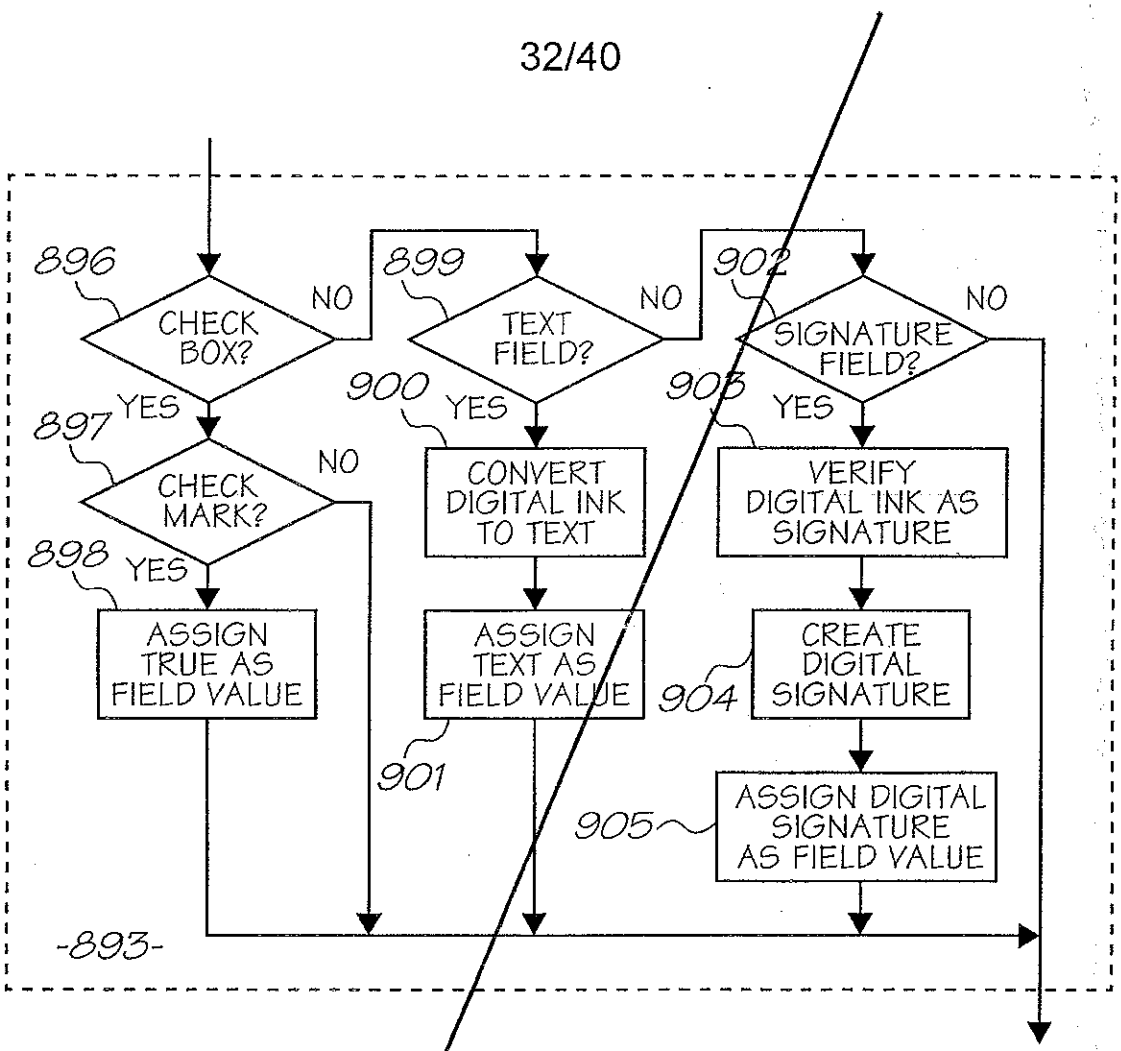
896
CHECK BOX?
NO
899
TEXT FIELD?
NO
902
SIGNATURE FIELD?
NO
YES
897
CHECK MARK?
NO
900
YES
CONVERT DIGITAL INK TO TEXT
903
YES
VERIFY DIGITAL INK AS SIGNATURE
898
YES
ASSIGN TRUE AS FIELD VALUE
ASSIGN TEXT AS FIELD VALUE
901
CREATE DIGITAL SIGNATURE
904
ASSIGN DIGITAL SIGNATURE AS FIELD VALUE
905
-893-

FIG. 38a

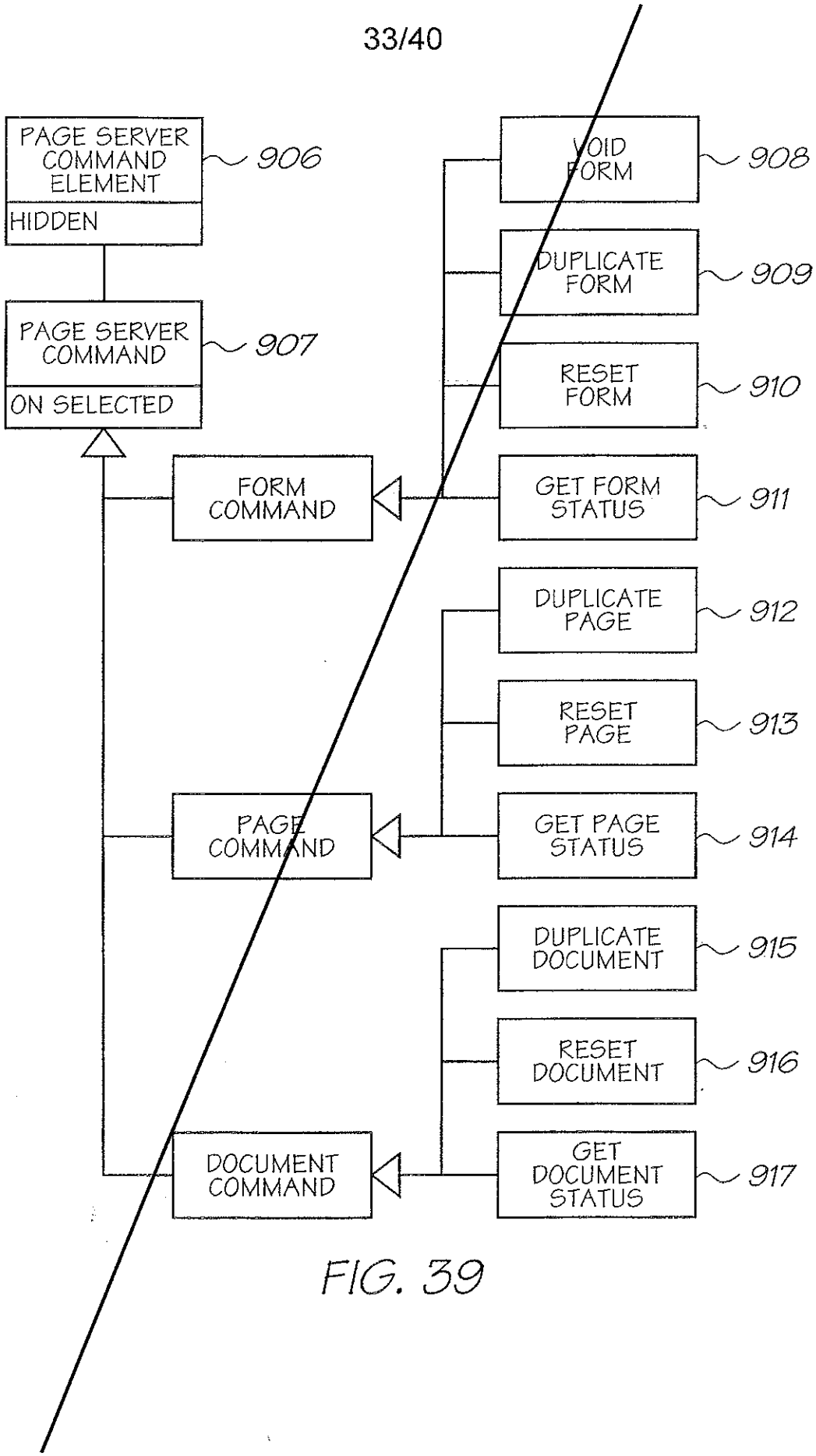
PAGE SERVER COMMAND ELEMENT
HIDDEN
906
PAGE SERVER COMMAND
ON SELECTED
907
FORM COMMAND
PAGE COMMAND
DOCUMENT COMMAND
VOID FORM
908
DUPLICATE FORM
909
RESET FORM
910
GET FORM STATUS
911
DUPLICATE PAGE
912
RESET PAGE
913
GET PAGE STATUS
914
DUPLICATE DOCUMENT
915
RESET DOCUMENT
916
GET DOCUMENT STATUS
917

FIG. 39

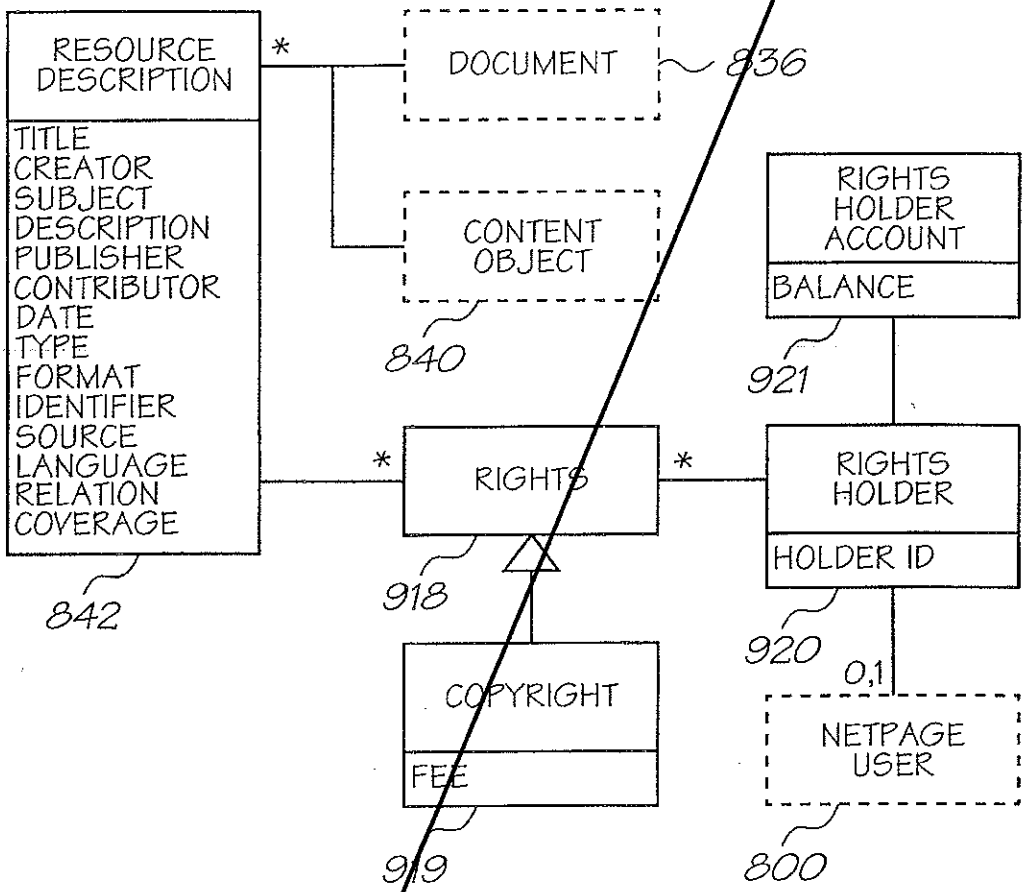
RESOURCE DESCRIPTION
TITLE
CREATOR
SUBJECT
DESCRIPTION
PUBLISHER
CONTRIBUTOR
DATE
TYPE
FORMAT
IDENTIFIER
SOURCE
LANGUAGE
RELATION
COVERAGE
842
*
DOCUMENT
836
CONTENT OBJECT
840
*
RIGHTS
918
*
COPYRIGHT
FEE
919
RIGHTS HOLDER ACCOUNT
BALANCE
921
RIGHTS HOLDER
HOLDER ID
920
0,1
NETPAGE USER
800

FIG. 40

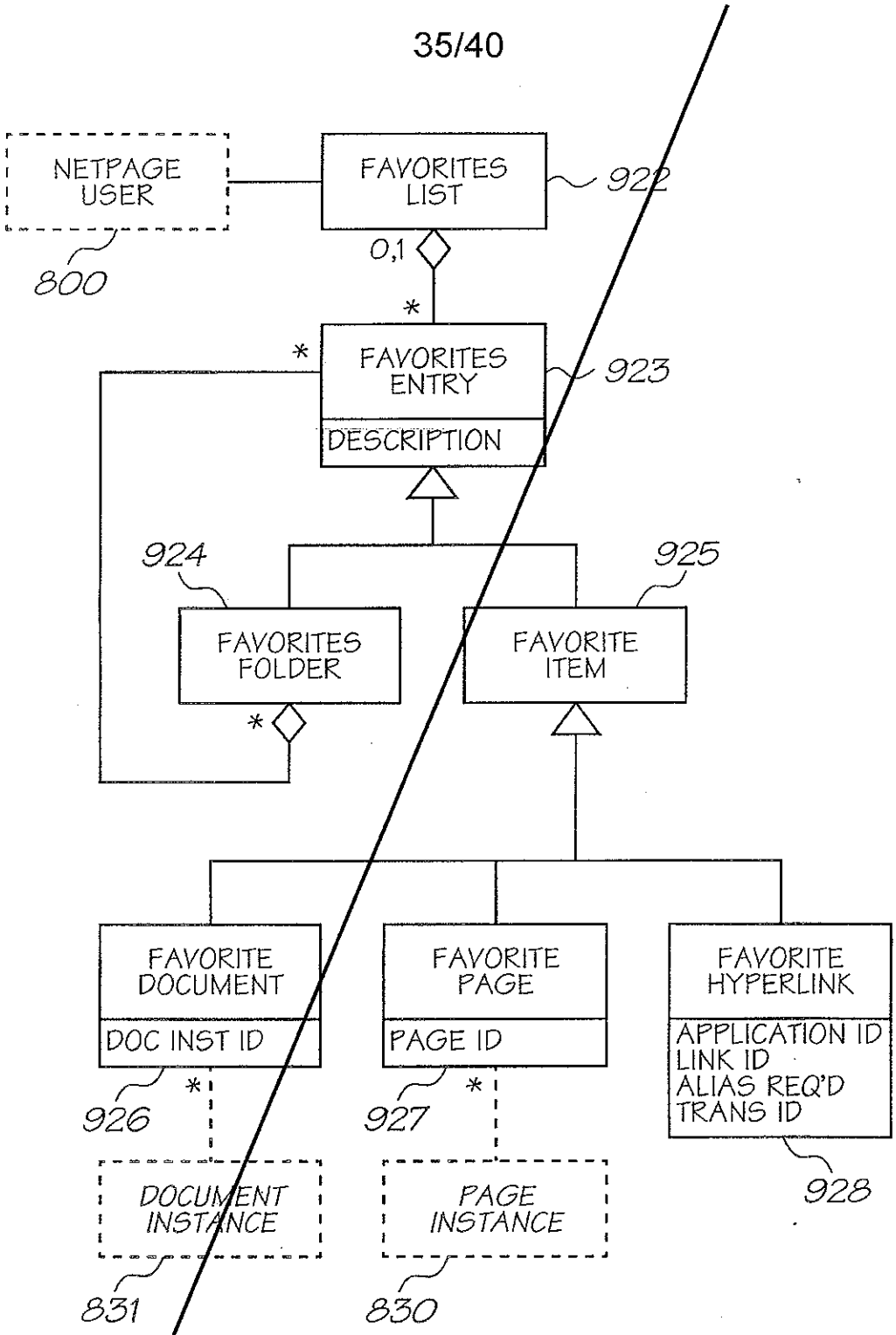
NETPAGE USER
800
FAVORITES LIST
922
0,1
*
*
FAVORITES ENTRY
DESCRIPTION
923
924
925
FAVORITES FOLDER
FAVORITE ITEM
*
FAVORITE DOCUMENT
DOC INST ID
FAVORITE PAGE
PAGE ID
FAVORITE HYPERLINK
APPLICATION ID
LINK ID
ALIAS REQ'D
TRANS ID
926
927
928
DOCUMENT INSTANCE
PAGE INSTANCE
831
830

FIG. 41

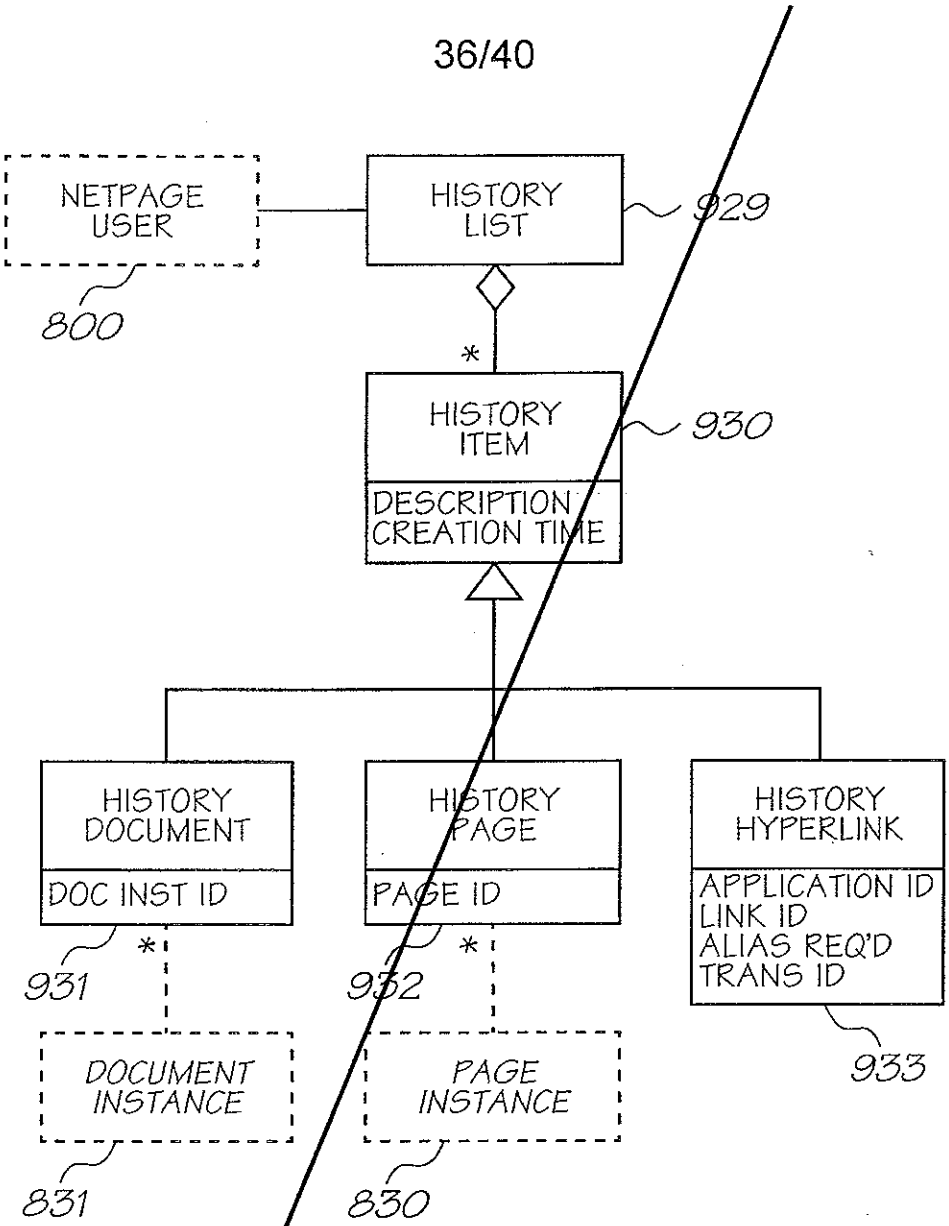
NETPAGE USER
800
HISTORY LIST
929
*
HISTORY ITEM
930
DESCRIPTION
CREATION TIME
HISTORY DOCUMENT
DOC INST ID
931
*
DOCUMENT INSTANCE
831
HISTORY PAGE
PAGE ID
932
*
PAGE INSTANCE
830
HISTORY HYPERLINK
APPLICATION ID
LINK ID
ALIAS REQ'D
TRANS ID
933

FIG. 42

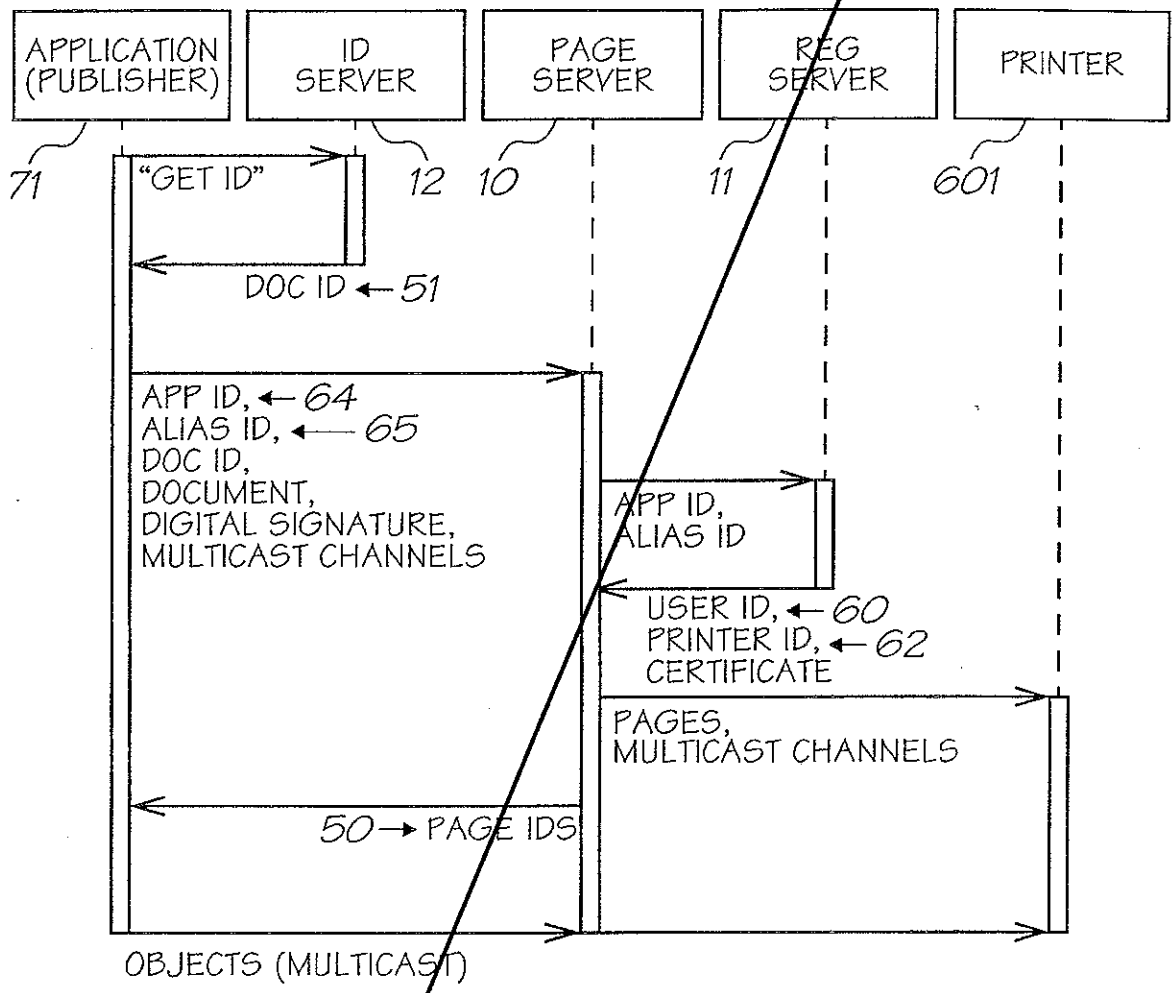
APPLICATION (PUBLISHER)
ID SERVER
PAGE SERVER
REG SERVER
PRINTER
71
12
10
11
601
"GET ID"
DOC ID ← 51
APP ID, ← 64
ALIAS ID, ← 65
DOC ID,
DOCUMENT,
DIGITAL SIGNATURE,
MULTICAST CHANNELS
APP ID,
ALIAS ID
USER ID, ← 60
PRINTER ID, ← 62
CERTIFICATE
PAGES,
MULTICAST CHANNELS
50 → PAGE IDS
OBJECTS (MULTICAST)

FIG. 43

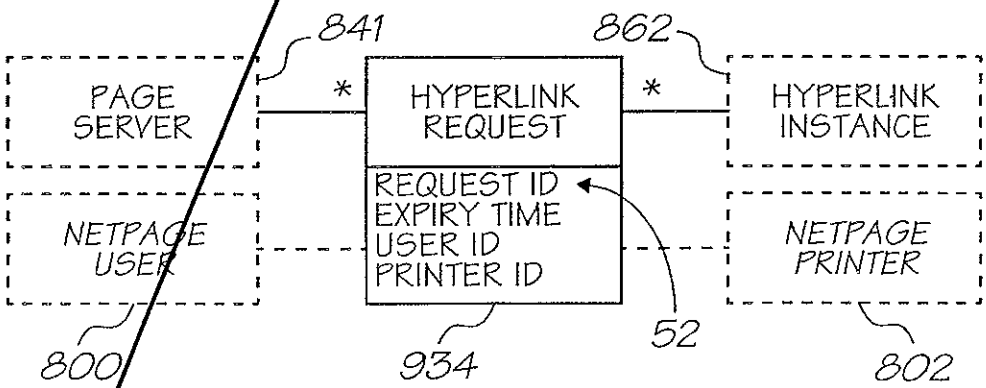
841
862
PAGE SERVER
*
HYPERLINK REQUEST
*
HYPERLINK INSTANCE
REQUEST ID
EXPIRY TIME
USER ID
PRINTER ID
NETPAGE USER
NETPAGE PRINTER
800
934
52
802

FIG. 44

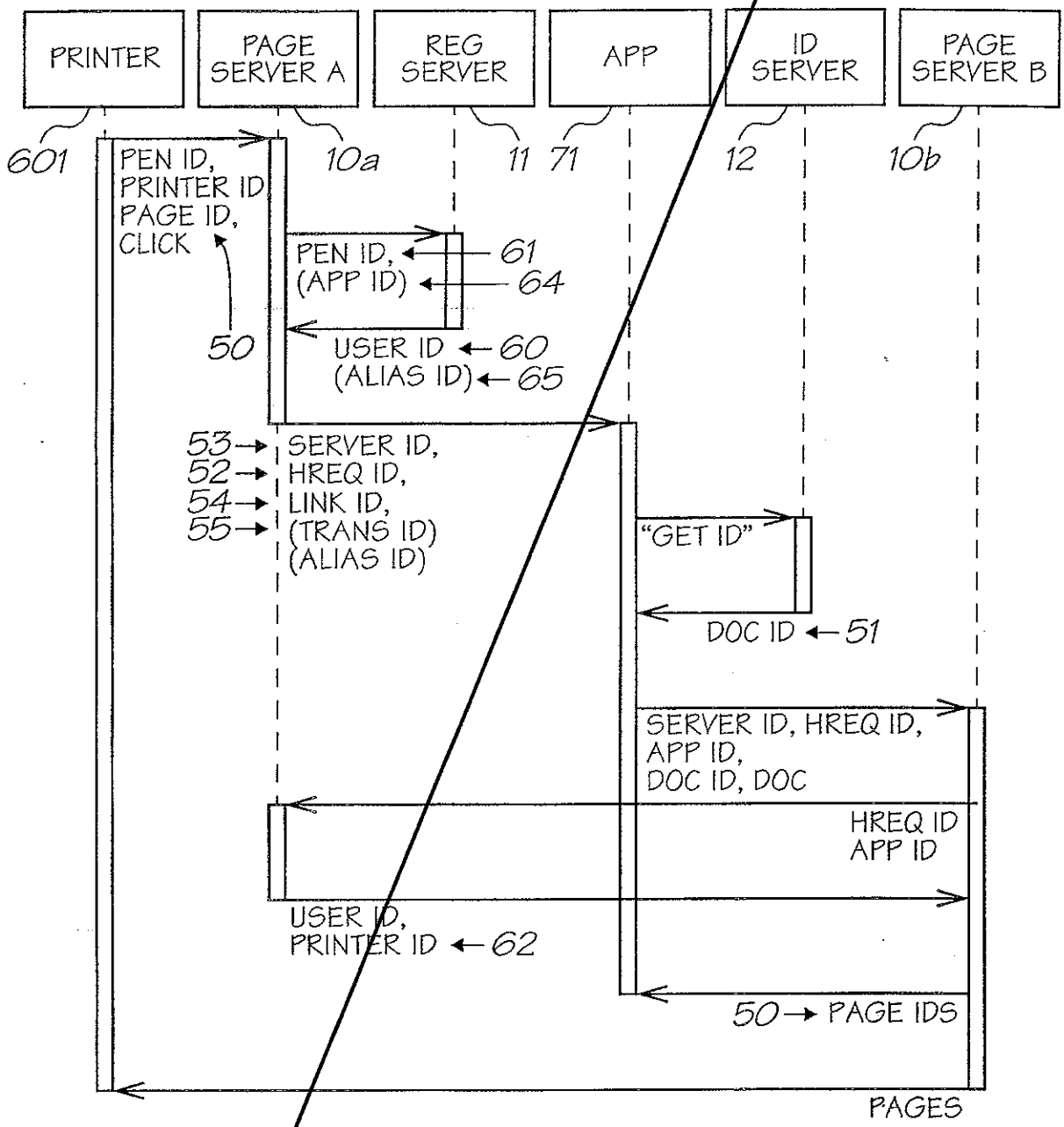
PRINTER
PAGE SERVER A
REG SERVER
APP
ID SERVER
PAGE SERVER B
601
10a
11
71
12
10b
PEN ID, PRINTER ID PAGE ID, CLICK
50
PEN ID, (APP ID)
61
64
USER ID
60
(ALIAS ID)
65
53 SERVER ID,
52 HREQ ID,
54 LINK ID,
55 (TRANS ID)
(ALIAS ID)
"GET ID"
DOC ID
51
SERVER ID, HREQ ID, APP ID, DOC ID, DOC
HREQ ID
APP ID
USER ID, PRINTER ID
62
50 PAGE IDS
PAGES

FIG. 45

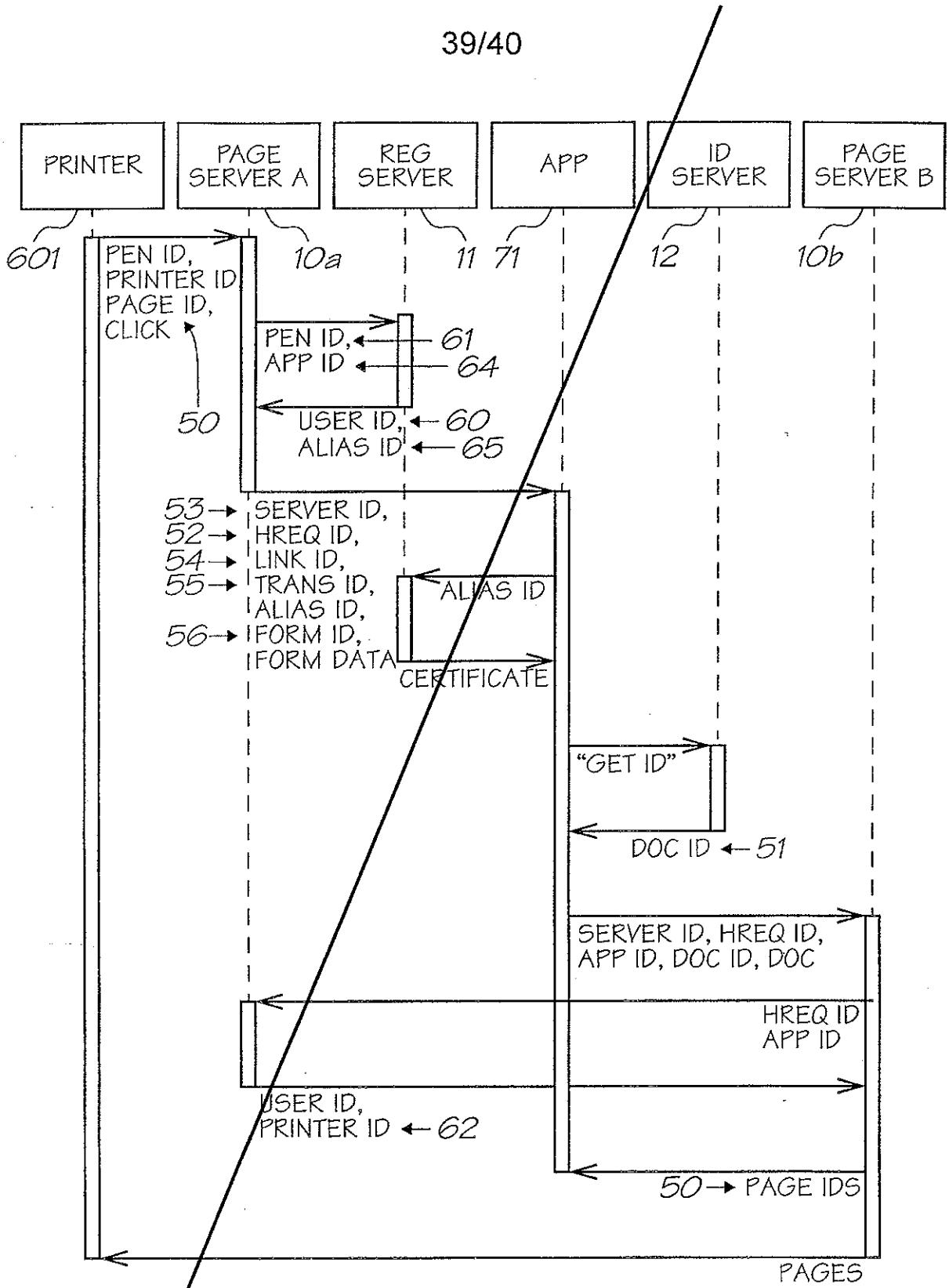
PRINTER
PAGE SERVER A
REG SERVER
APP
ID SERVER
PAGE SERVER B
601
10a
11
71
12
10b
PEN ID,
PRINTER ID
PAGE ID,
CLICK
50
PEN ID, 61
APP ID 64
USER ID, 60
ALIAS ID 65
53 SERVER ID,
52 HREQ ID,
54 LINK ID,
55 TRANS ID,
ALIAS ID,
56 FORM ID,
FORM DATA
ALIAS ID
CERTIFICATE
"GET ID"
DOC ID 51
SERVER ID, HREQ ID,
APP ID, DOC ID, DOC
HREQ ID
APP ID
USER ID,
PRINTER ID 62
50 PAGE IDS
PAGES

FIG. 46

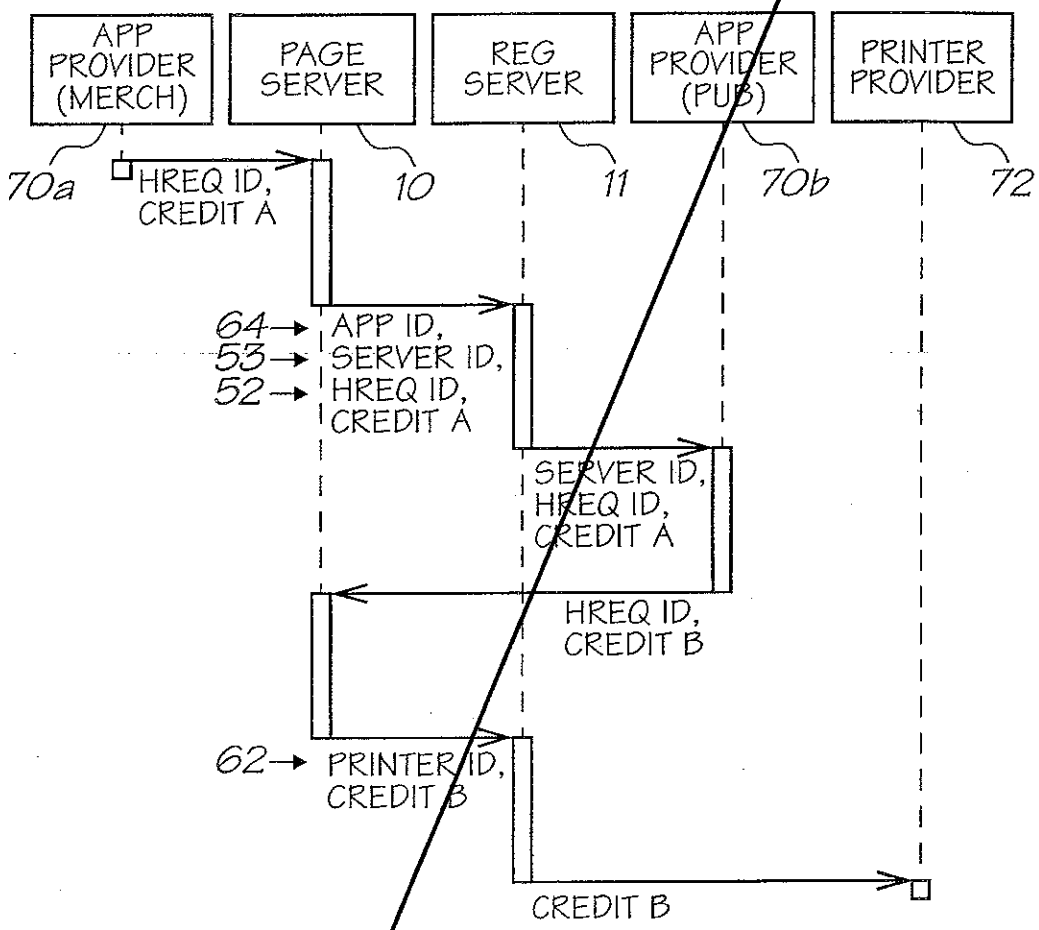
APP PROVIDER (MERCH)
PAGE SERVER
REG SERVER
APP PROVIDER (PUB)
PRINTER PROVIDER
70a
10
11
70b
72
HREQ ID, CREDIT A
64
53
52
APP ID, SERVER ID, HREQ ID, CREDIT A
SERVER ID, HREQ ID, CREDIT A
HREQ ID, CREDIT B
62
PRINTER ID, CREDIT B
CREDIT B

FIG. 47

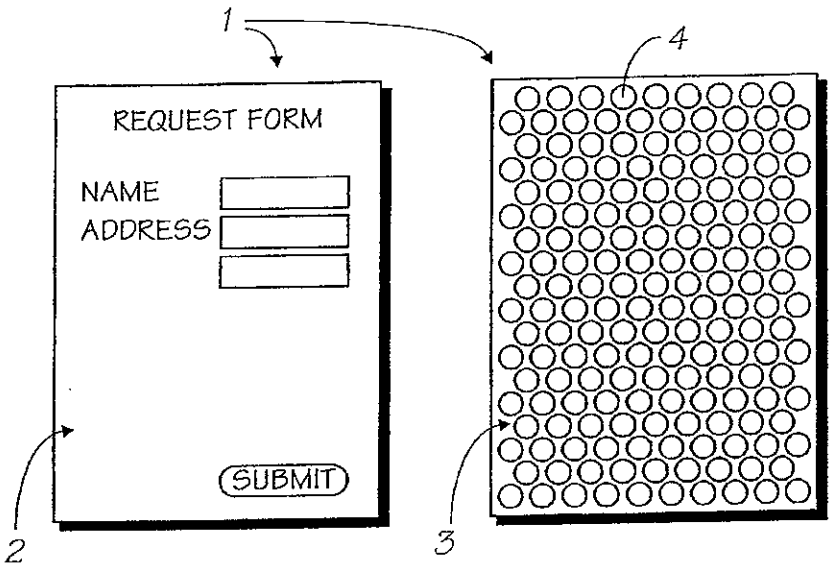
1
4
REQUEST FORM
NAME
ADDRESS
SUBMIT
2
3

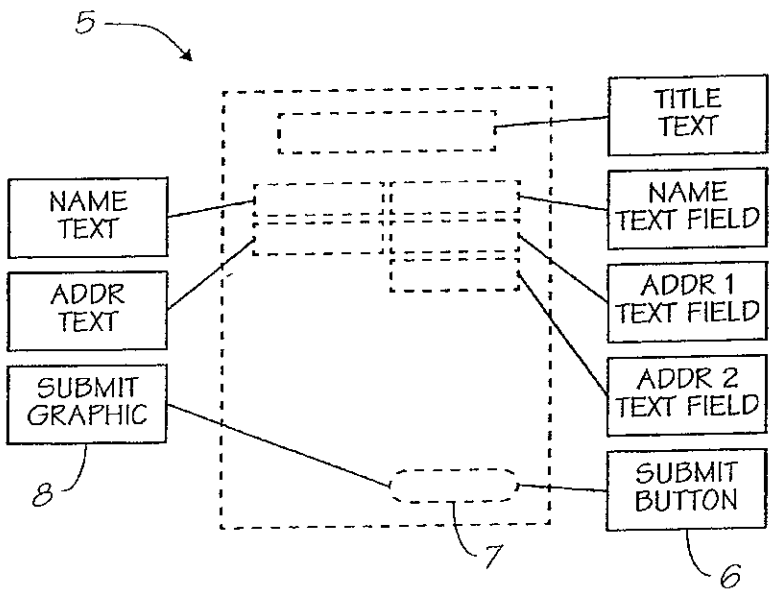
5
TITLE TEXT
NAME TEXT
NAME TEXT FIELD
ADDR TEXT
ADDR 1 TEXT FIELD
ADDR 2 TEXT FIELD
SUBMIT GRAPHIC
SUBMIT BUTTON
8
7
6

FIG. 1

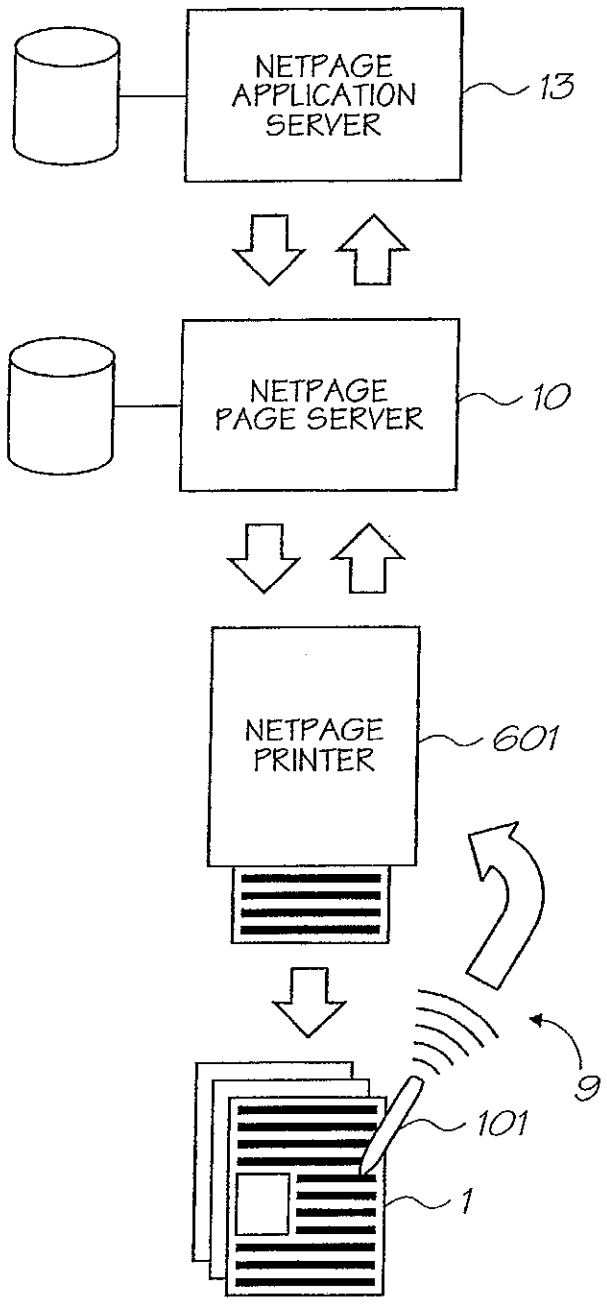
NETPAGE APPLICATION SERVER
13
NETPAGE PAGE SERVER
10
NETPAGE PRINTER
601
9
101
1

FIG. 2

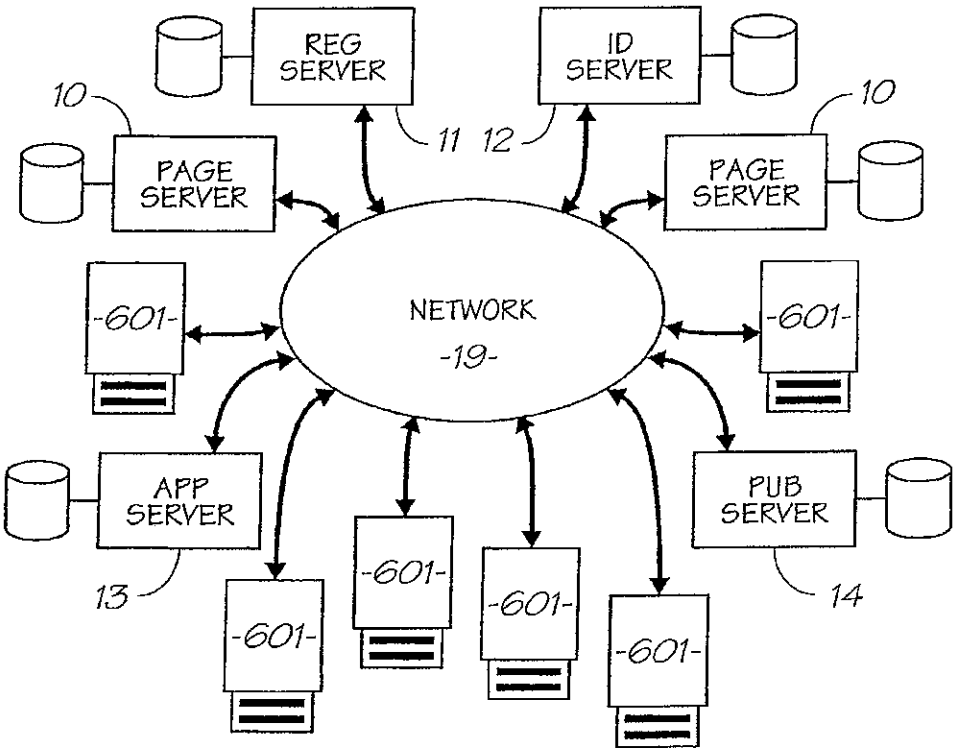
REG SERVER
ID SERVER
10
11
12
10
PAGE SERVER
PAGE SERVER
-601-
NETWORK
-19-
-601-
APP SERVER
PUB SERVER
13
14
-601-
-601-
-601-
-601-

FIG. 3

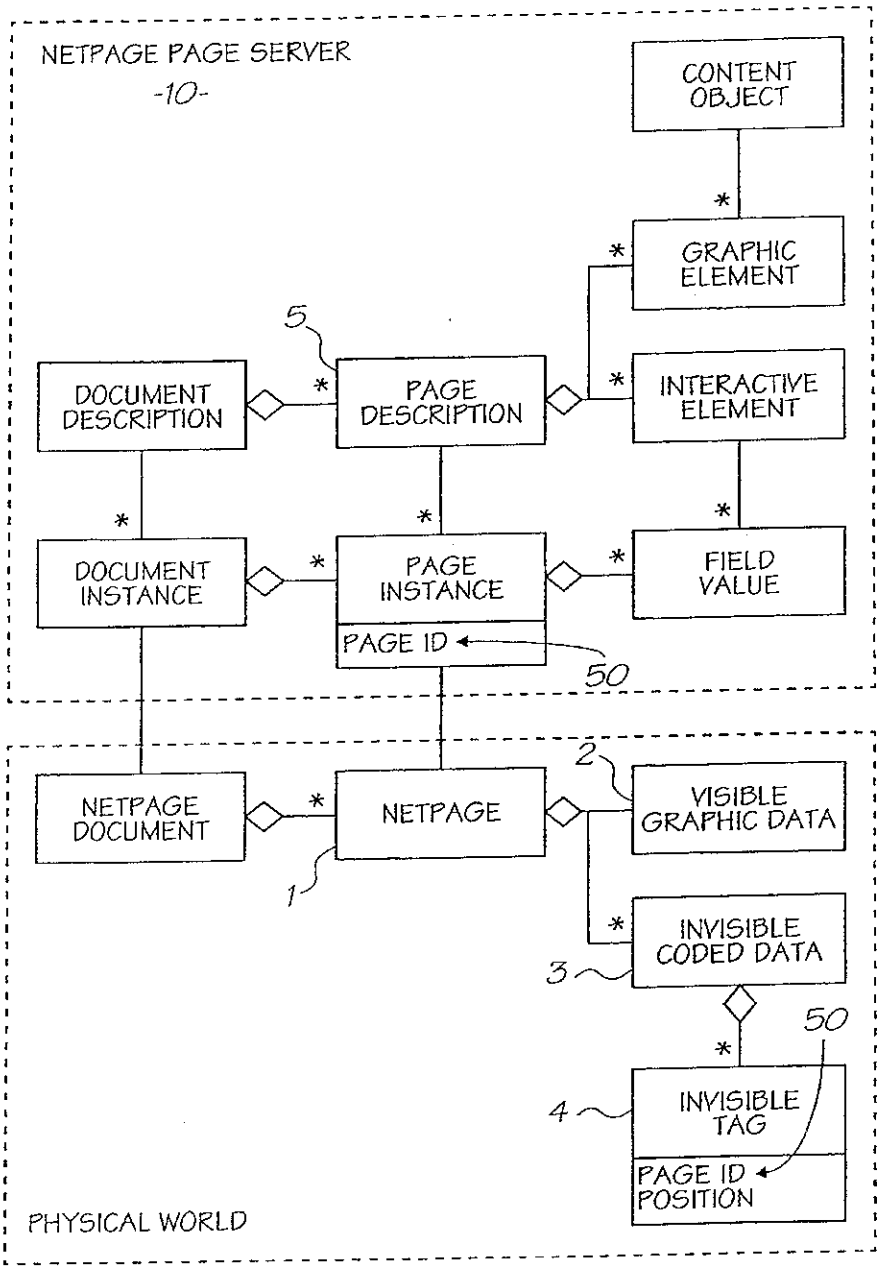
NETPAGE PAGE SERVER
-10-
CONTENT OBJECT
GRAPHIC ELEMENT
INTERACTIVE ELEMENT
FIELD VALUE
DOCUMENT DESCRIPTION
PAGE DESCRIPTION
DOCUMENT INSTANCE
PAGE INSTANCE
PAGE ID
50
5
NETPAGE DOCUMENT
NETPAGE
1
2
VISIBLE GRAPHIC DATA
INVISIBLE CODED DATA
3
INVISIBLE TAG
4
PAGE ID POSITION
PHYSICAL WORLD

FIG. 4

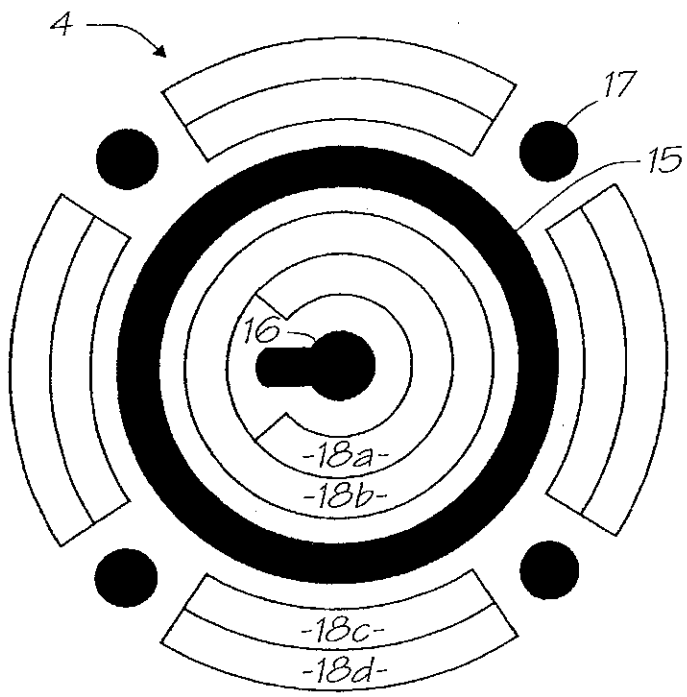

FIG. 5

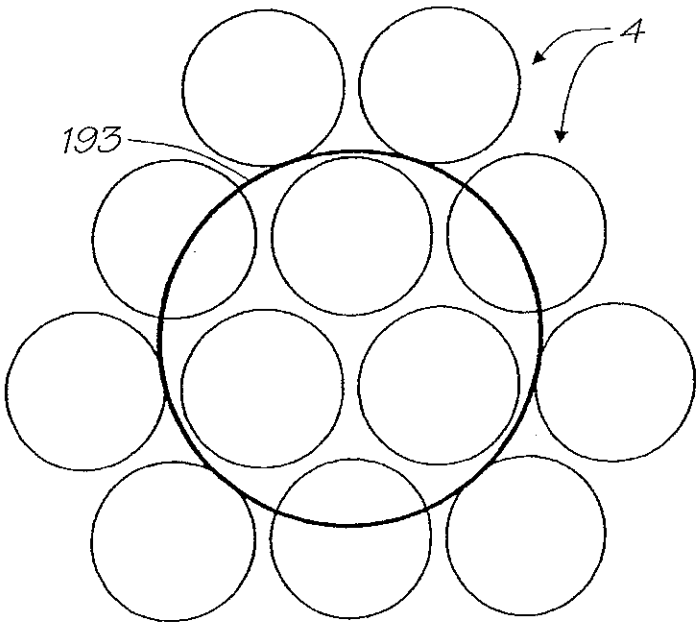

FIG. 6

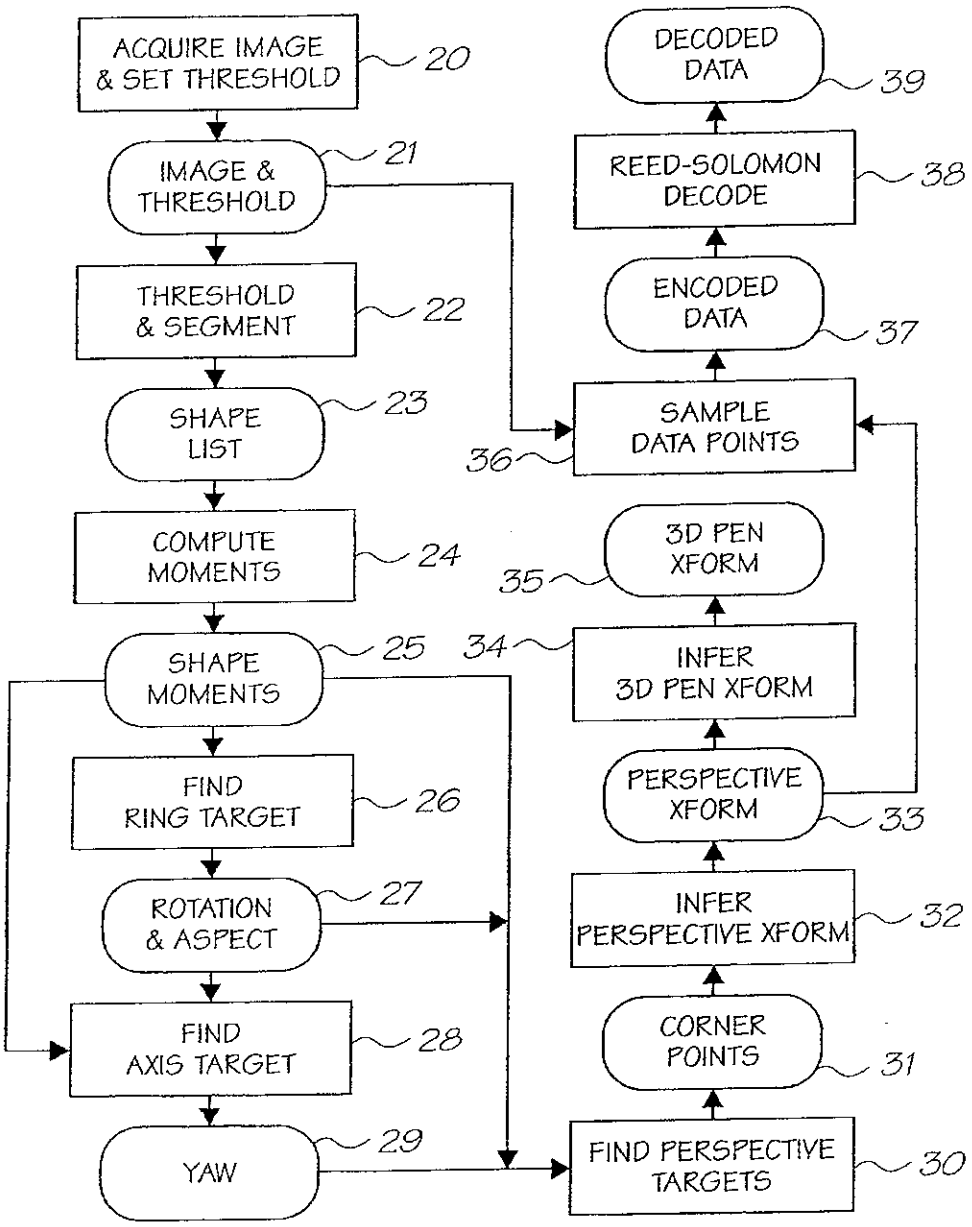
ACQUIRE IMAGE & SET THRESHOLD
20
IMAGE & THRESHOLD
21
THRESHOLD & SEGMENT
22
SHAPE LIST
23
COMPUTE MOMENTS
24
SHAPE MOMENTS
25
FIND RING TARGET
26
ROTATION & ASPECT
27
FIND AXIS TARGET
28
YAW
29
FIND PERSPECTIVE TARGETS
30
CORNER POINTS
31
INFER PERSPECTIVE XFORM
32
PERSPECTIVE XFORM
33
INFER 3D PEN XFORM
34
3D PEN XFORM
35
SAMPLE DATA POINTS
36
ENCODED DATA
37
REED-SOLOMON DECODE
38
DECODED DATA
39

FIG. 7

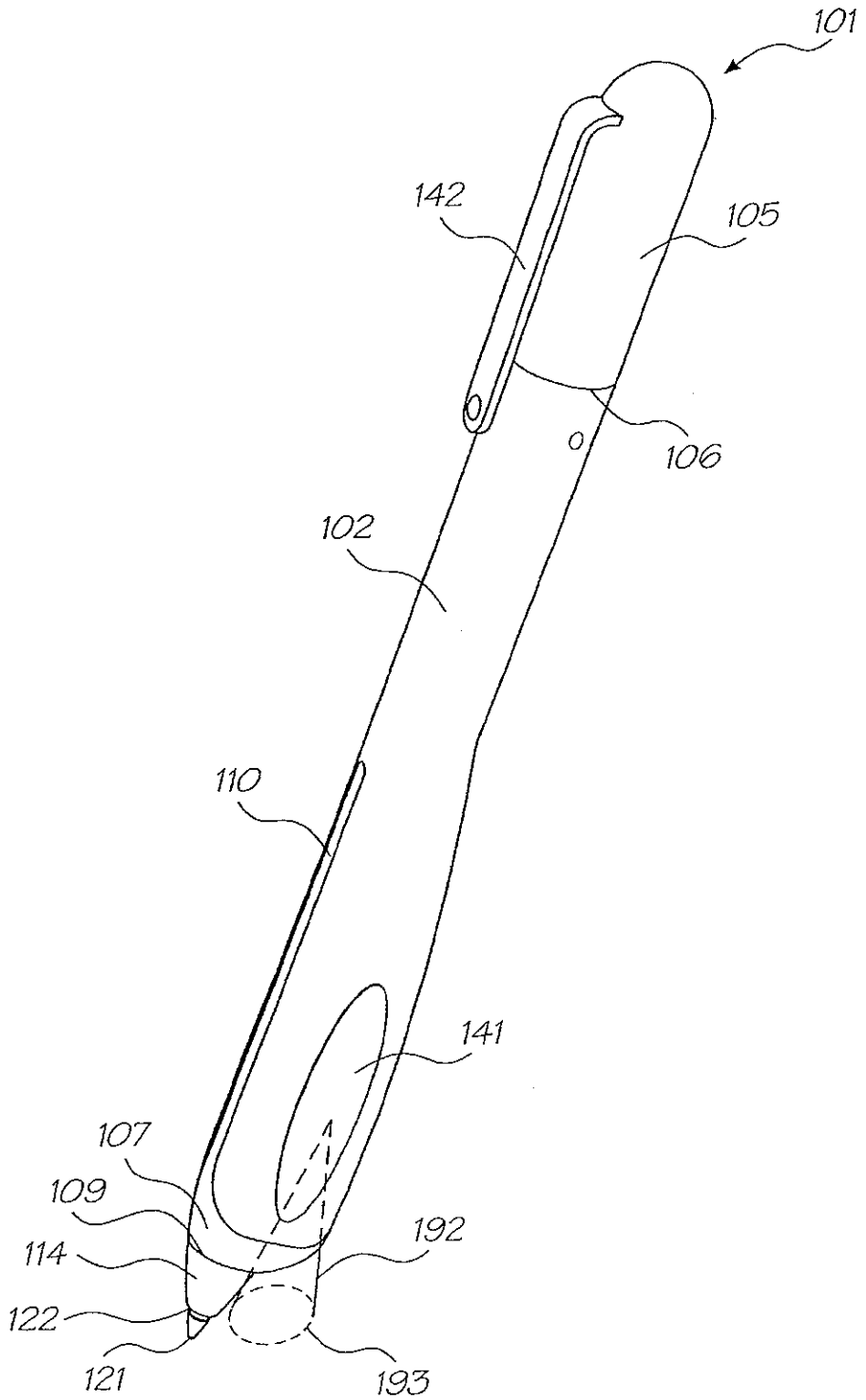

FIG. 8

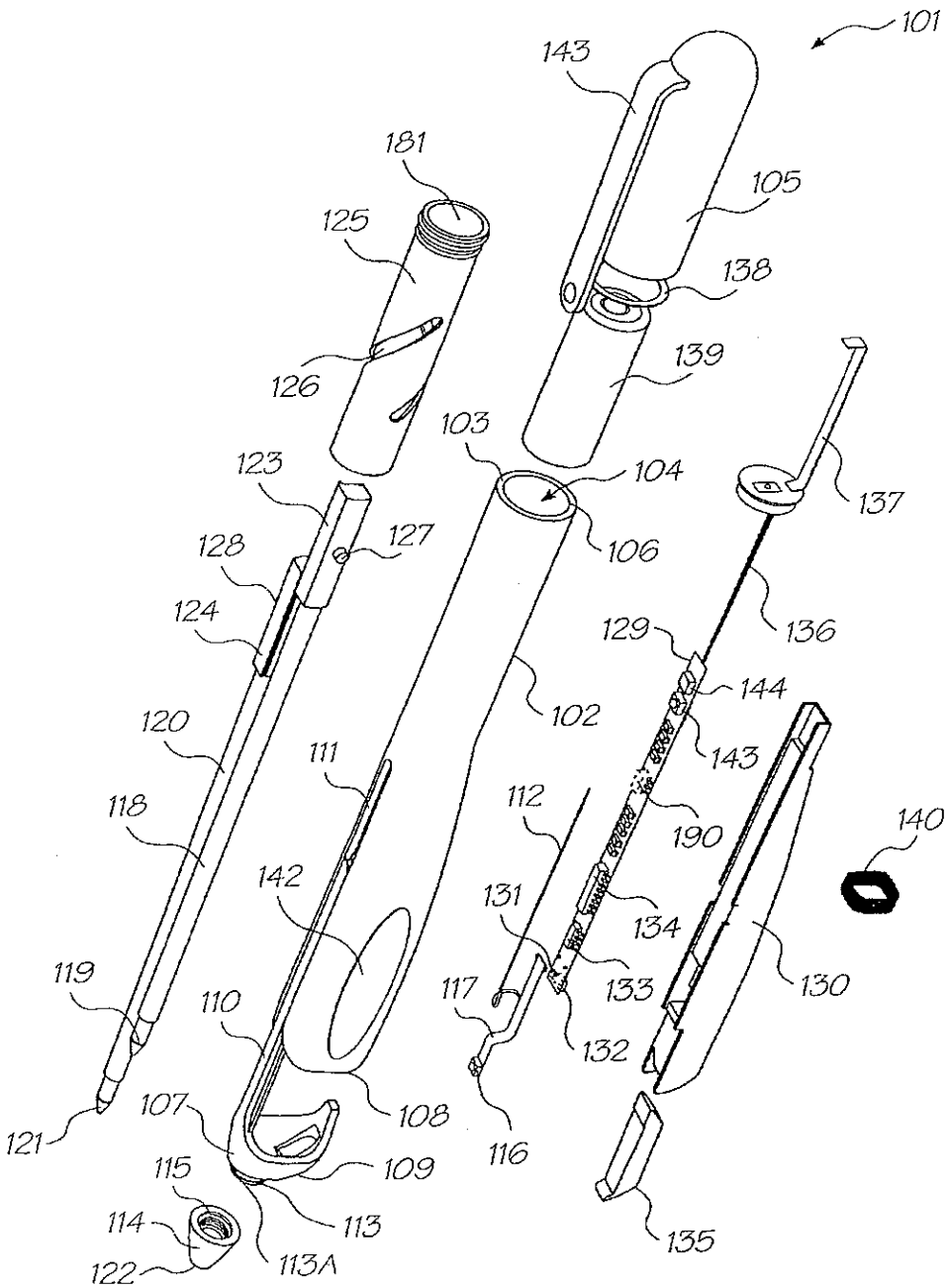
101
143
181
105
125
138
126
139
103
104
123
137
127
106
128
136
124
129
144
102
120
143
111
112
118
190
140
142
131
134
119
133
130
117
110
132
108
107
116
121
109
115
113
114
135
122
113A

FIG. 9

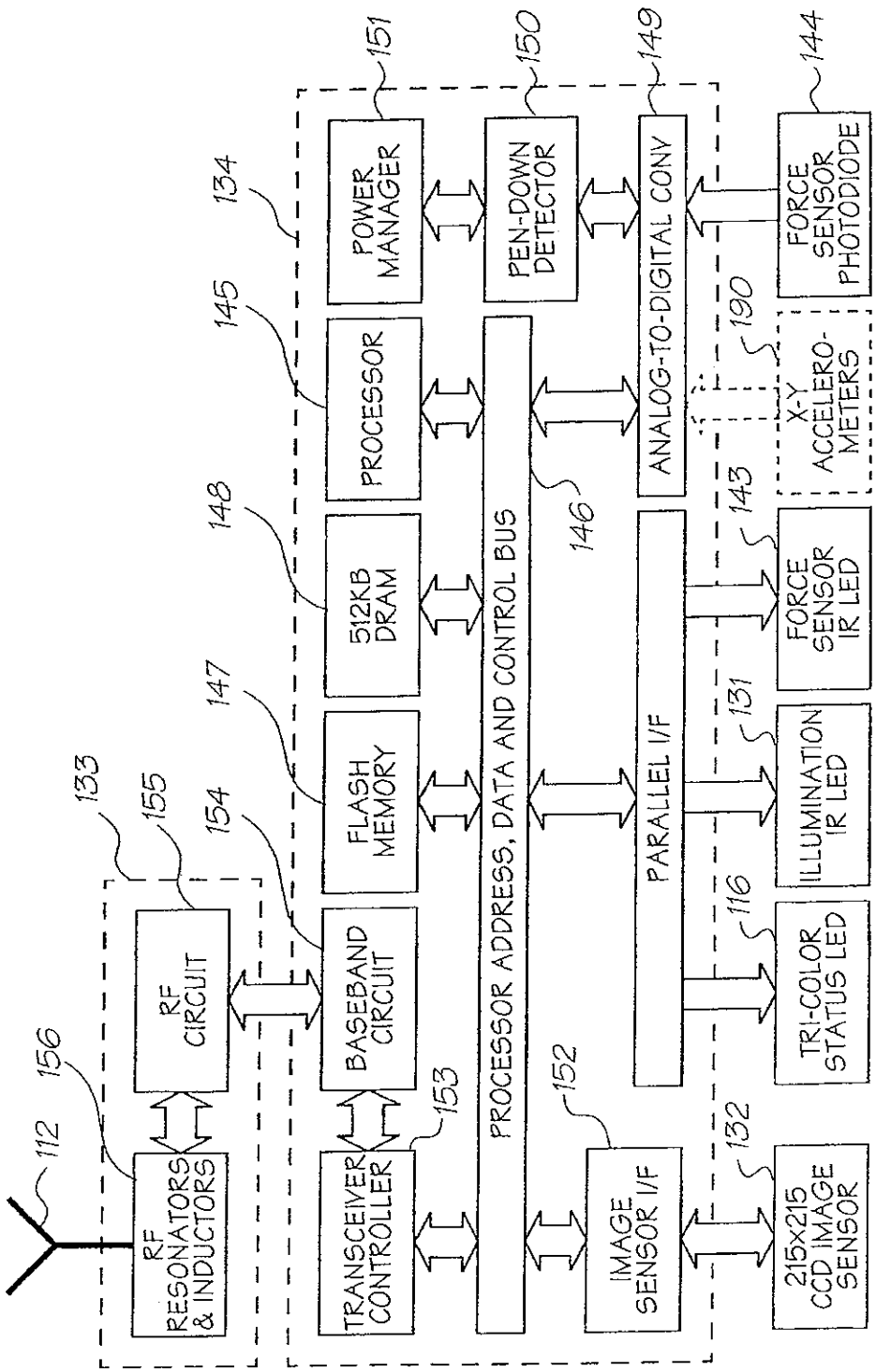
112
156
133
155
154
147
148
145
134
151
150
149
144
RF RESONATORS & INDUCTORS
RF CIRCUIT
BASEBAND CIRCUIT
FLASH MEMORY
512KB DRAM
PROCESSOR
POWER MANAGER
PEN-DOWN DETECTOR
ANALOG-TO-DIGITAL CONV
FORCE SENSOR PHOTODIODE
153
152
146
143
190
X-Y ACCELERO-METERS
TRANSCEIVER CONTROLLER
PROCESSOR ADDRESS, DATA AND CONTROL BUS
PARALLEL I/F
FORCE SENSOR IR LED
131
ILLUMINATION IR LED
116
TRI-COLOR STATUS LED
IMAGE SENSOR I/F
132
215x215 CCD IMAGE SENSOR

FIG. 10

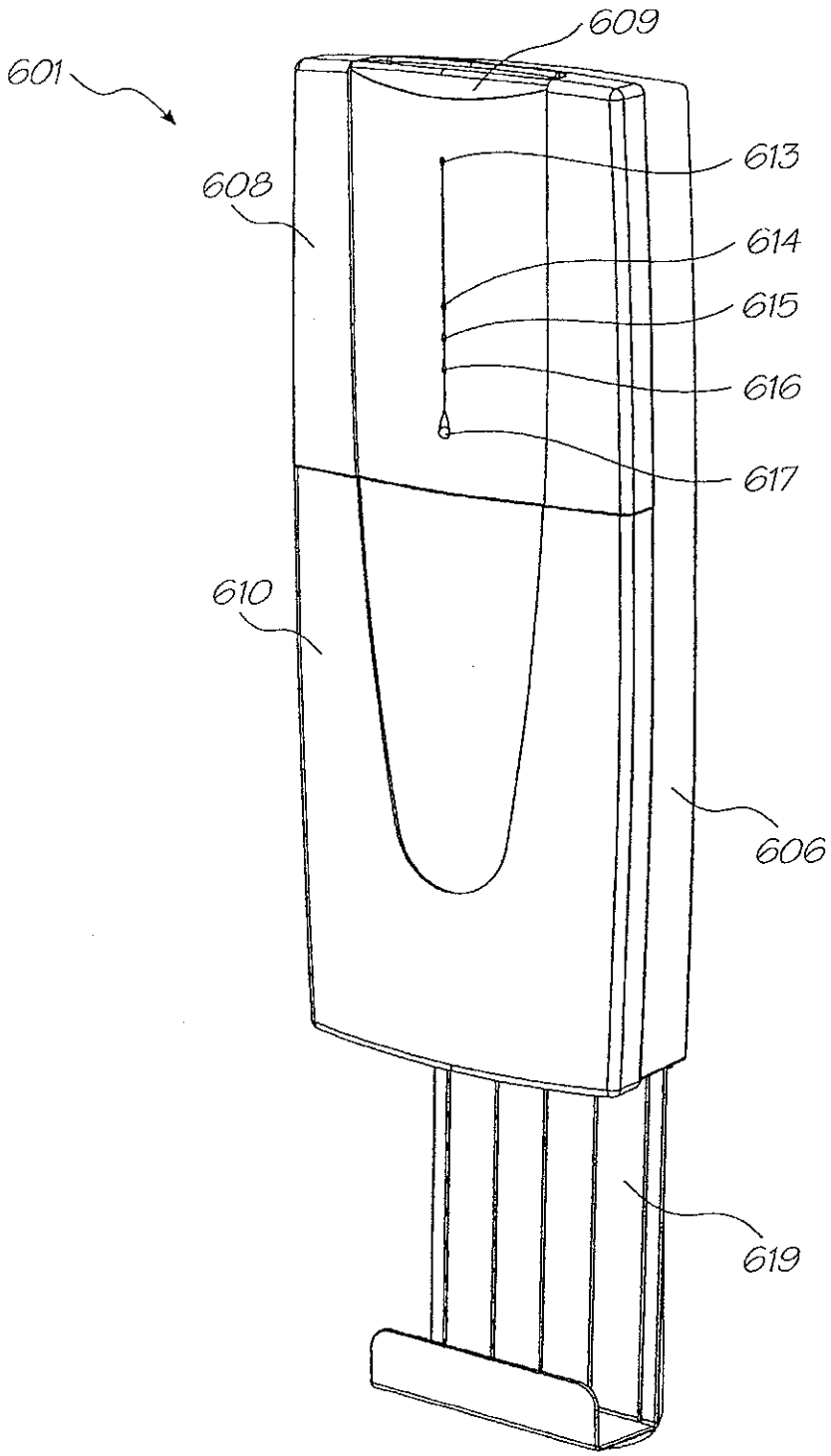

FIG. 11

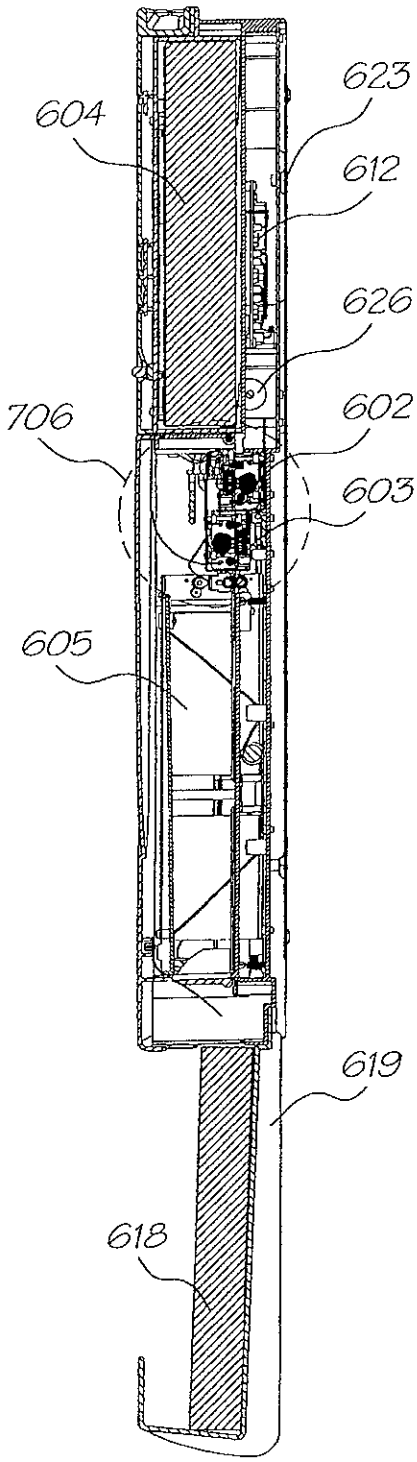

FIG. 12

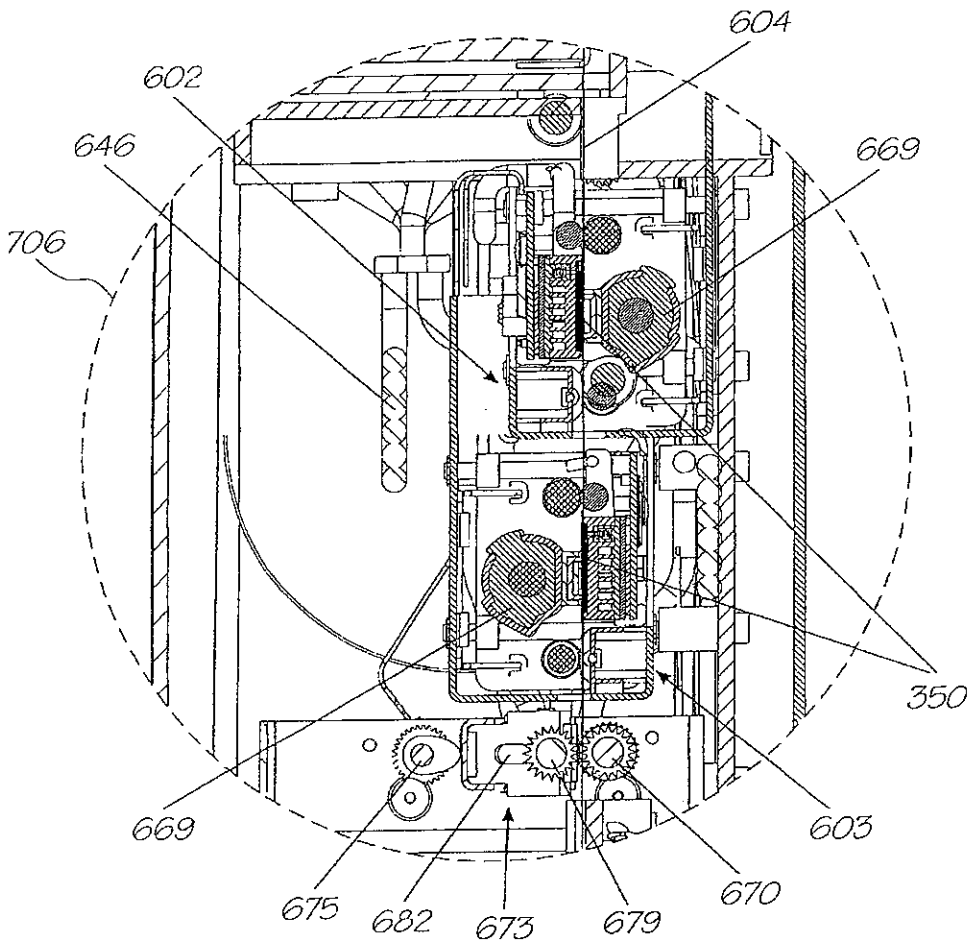

FIG. 12a

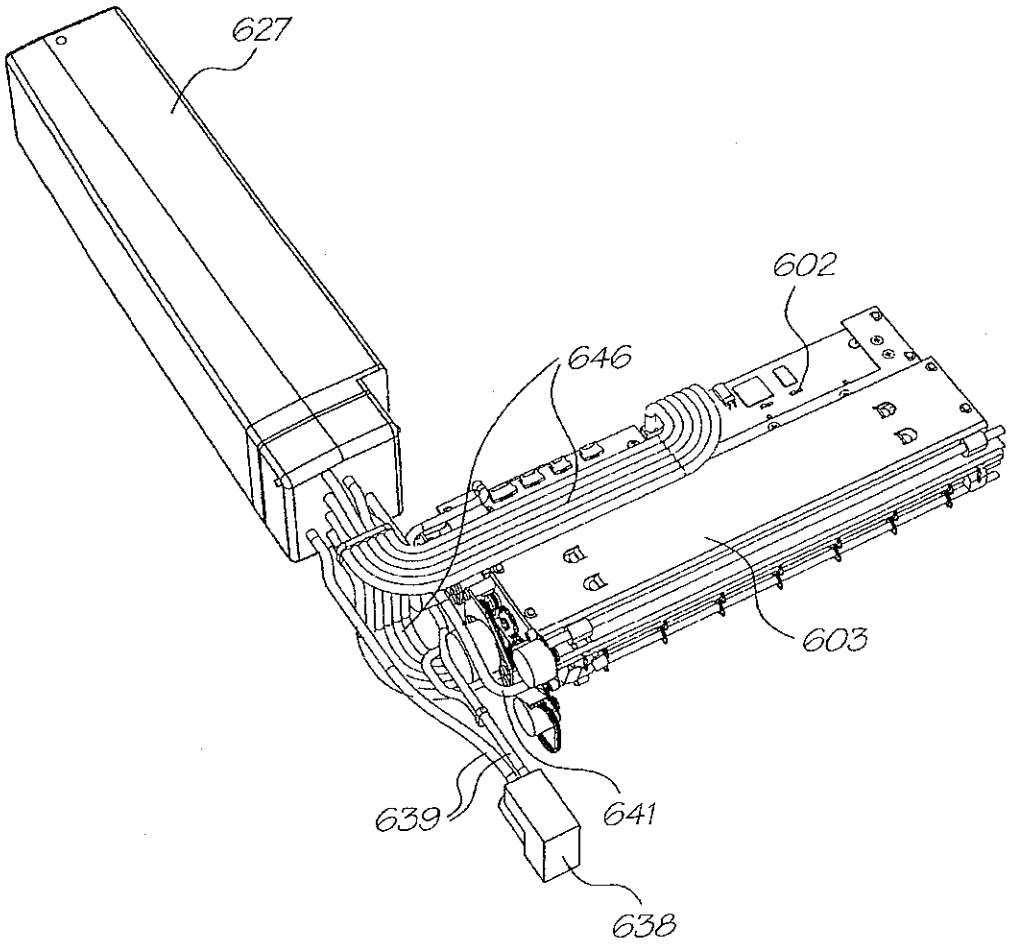

FIG. 13

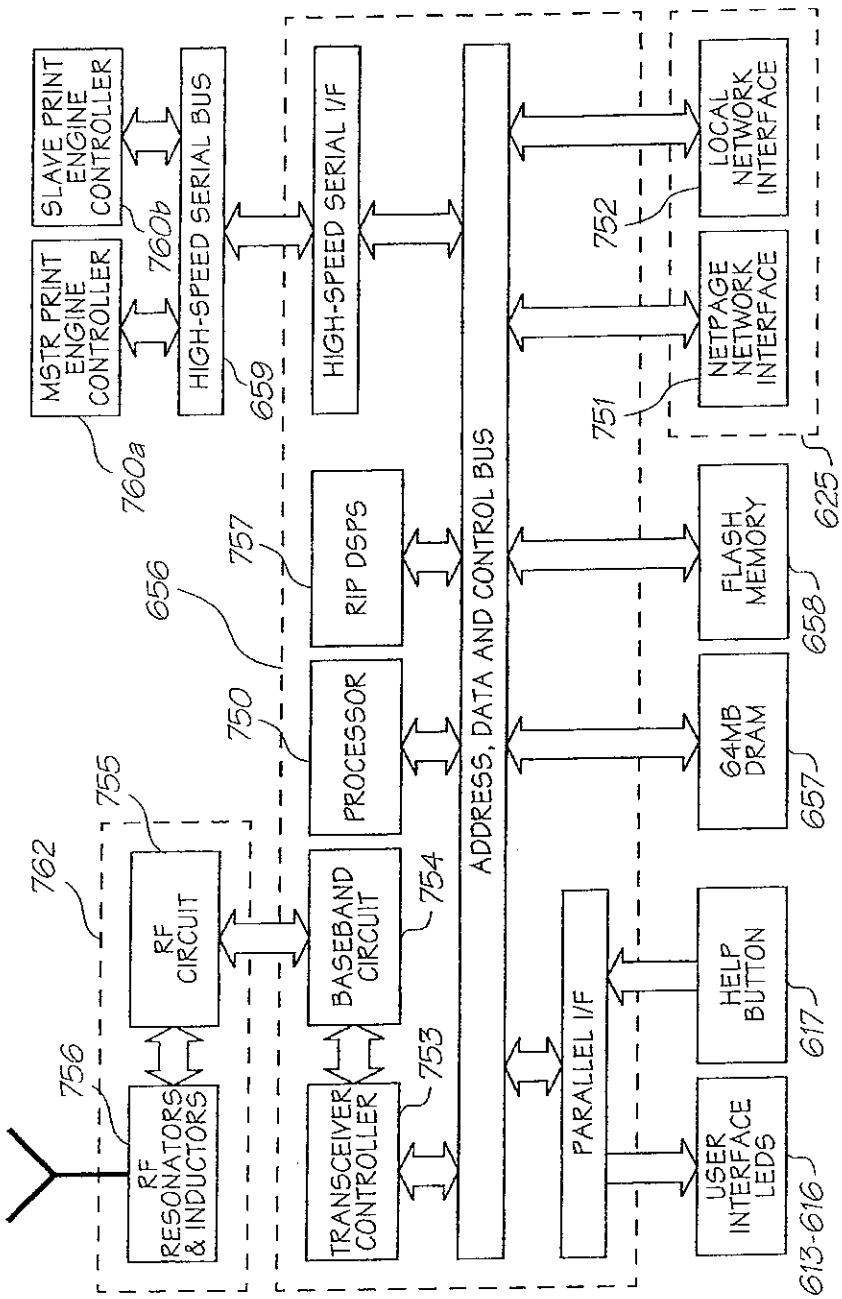
SLAVE PRINT ENGINE CONTROLLER
MSTR PRINT ENGINE CONTROLLER
760b
760a
HIGH-SPEED SERIAL BUS
659
HIGH-SPEED SERIAL I/F
RIP DSPS
757
656
PROCESSOR
750
ADDRESS, DATA AND CONTROL BUS
LOCAL NETWORK INTERFACE
752
NETPAGE NETWORK INTERFACE
751
FLASH MEMORY
658
625
64MB DRAM
657
762
755
RF CIRCUIT
BASEBAND CIRCUIT
754
756
RF RESONATORS & INDUCTORS
TRANSCEIVER CONTROLLER
753
PARALLEL I/F
HELP BUTTON
617
USER INTERFACE LEDS
613-616

FIG. 14

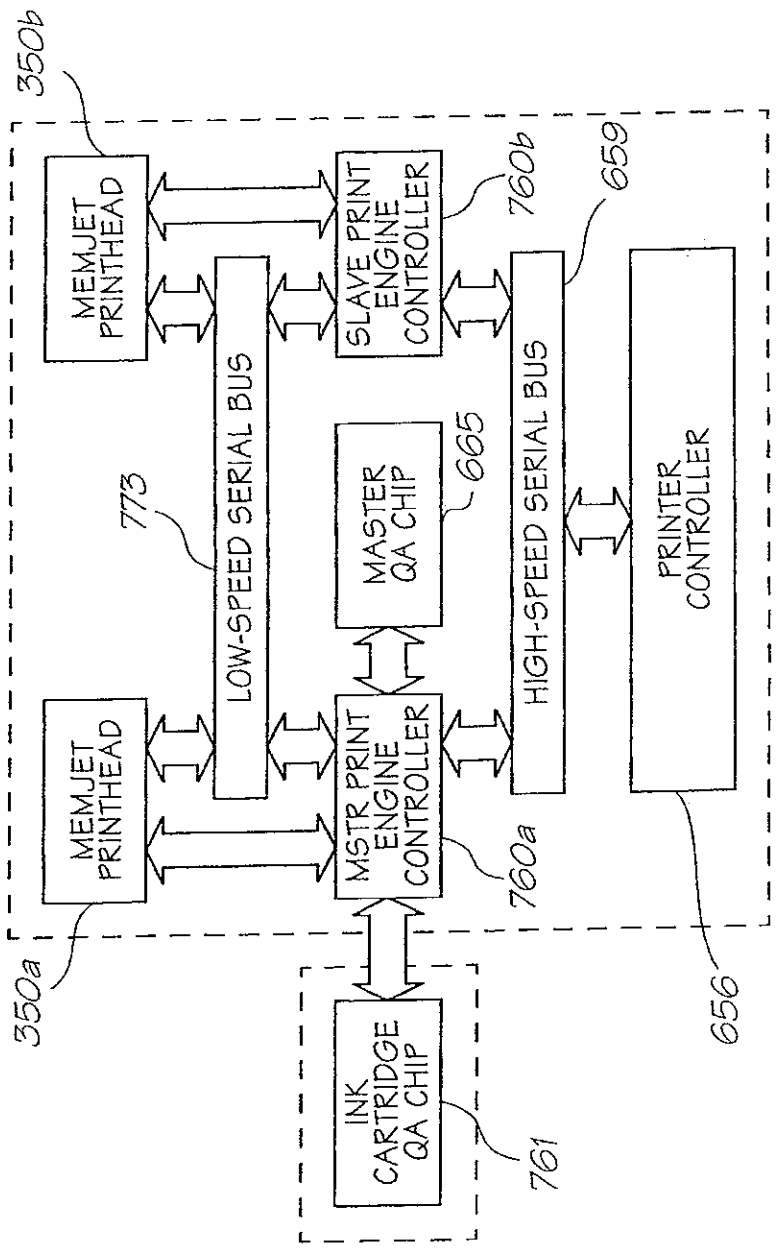
350b
MEMJET PRINTHEAD
SLAVE PRINT ENGINE CONTROLLER
760b
659
773
LOW-SPEED SERIAL BUS
MASTER QA CHIP
665
HIGH-SPEED SERIAL BUS
PRINTER CONTROLLER
MEMJET PRINTHEAD
MSTR PRINT ENGINE CONTROLLER
760a
350a
656
INK CARTRIDGE QA CHIP
761

FIG. 15

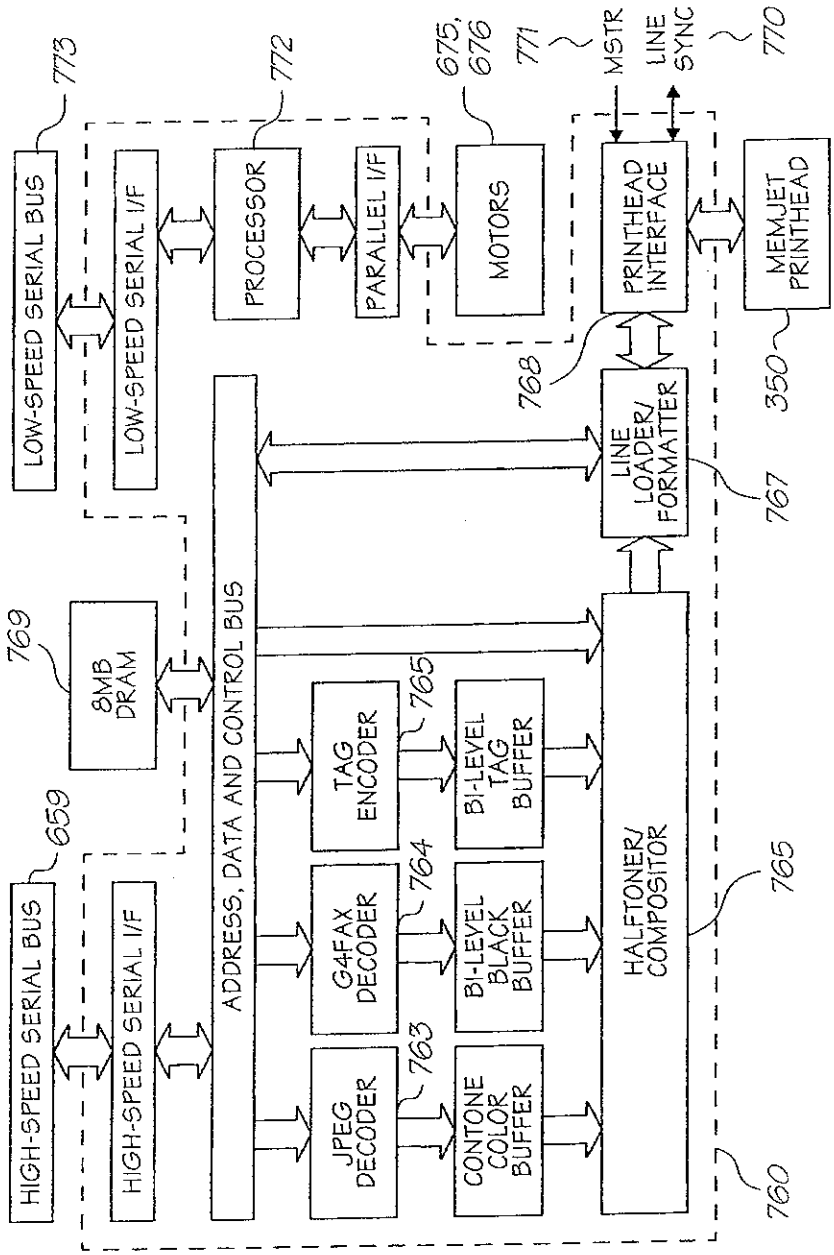
HIGH-SPEED SERIAL BUS
659
HIGH-SPEED SERIAL I/F
LOW-SPEED SERIAL BUS
773
LOW-SPEED SERIAL I/F
8MB DRAM
769
ADDRESS, DATA AND CONTROL BUS
JPEG DECODER
763
G4FAX DECODER
764
TAG ENCODER
765
CONTONE COLOR BUFFER
BI-LEVEL BLACK BUFFER
BI-LEVEL TAG BUFFER
HALFTONER/ COMPOSITOR
766
760
PROCESSOR
772
PARALLEL I/F
675, 676
MOTORS
771
MSTR
LINE SYNC
770
PRINTHEAD INTERFACE
768
LINE LOADER/ FORMATTER
767
MEMJET PRINTHEAD
350

FIG. 16

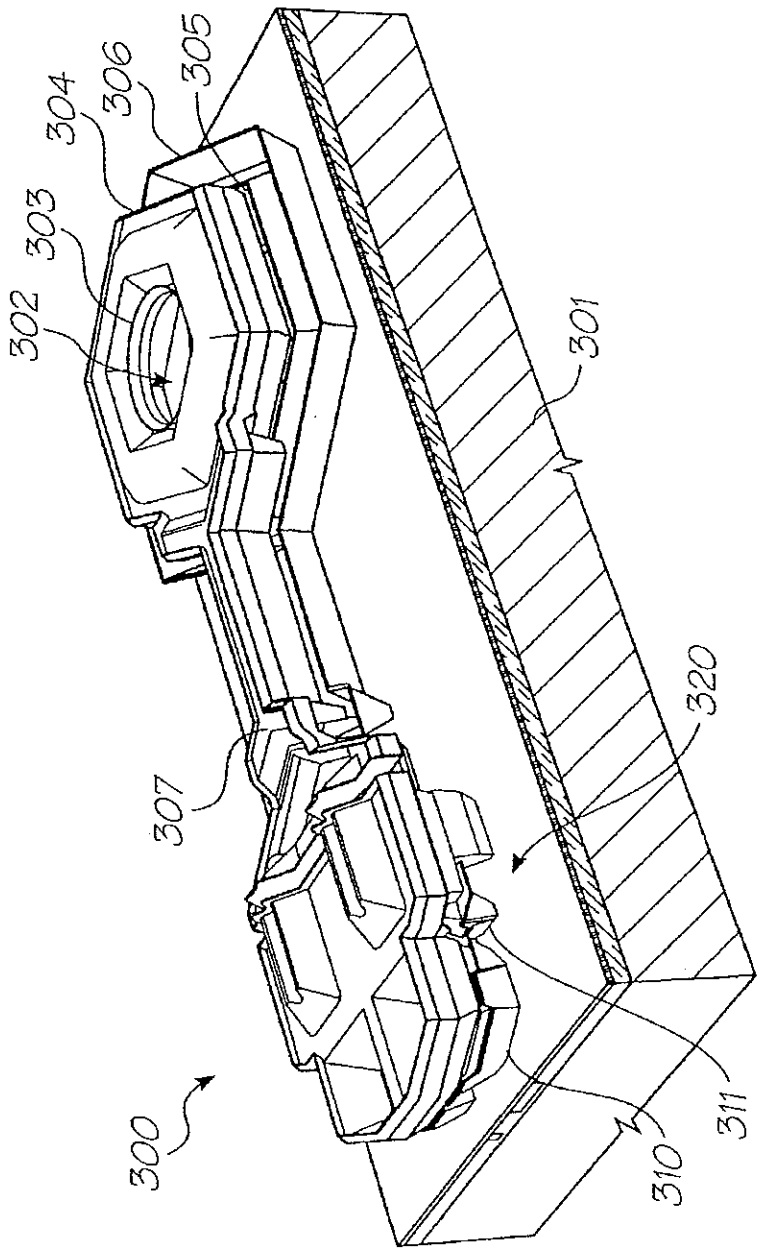

FIG. 17

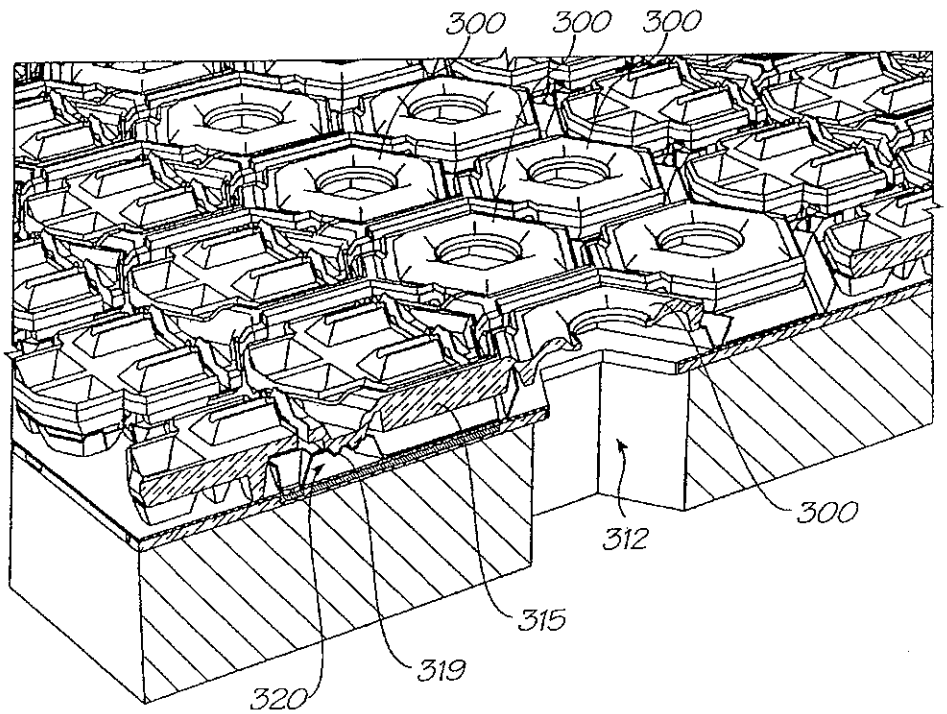

FIG. 18

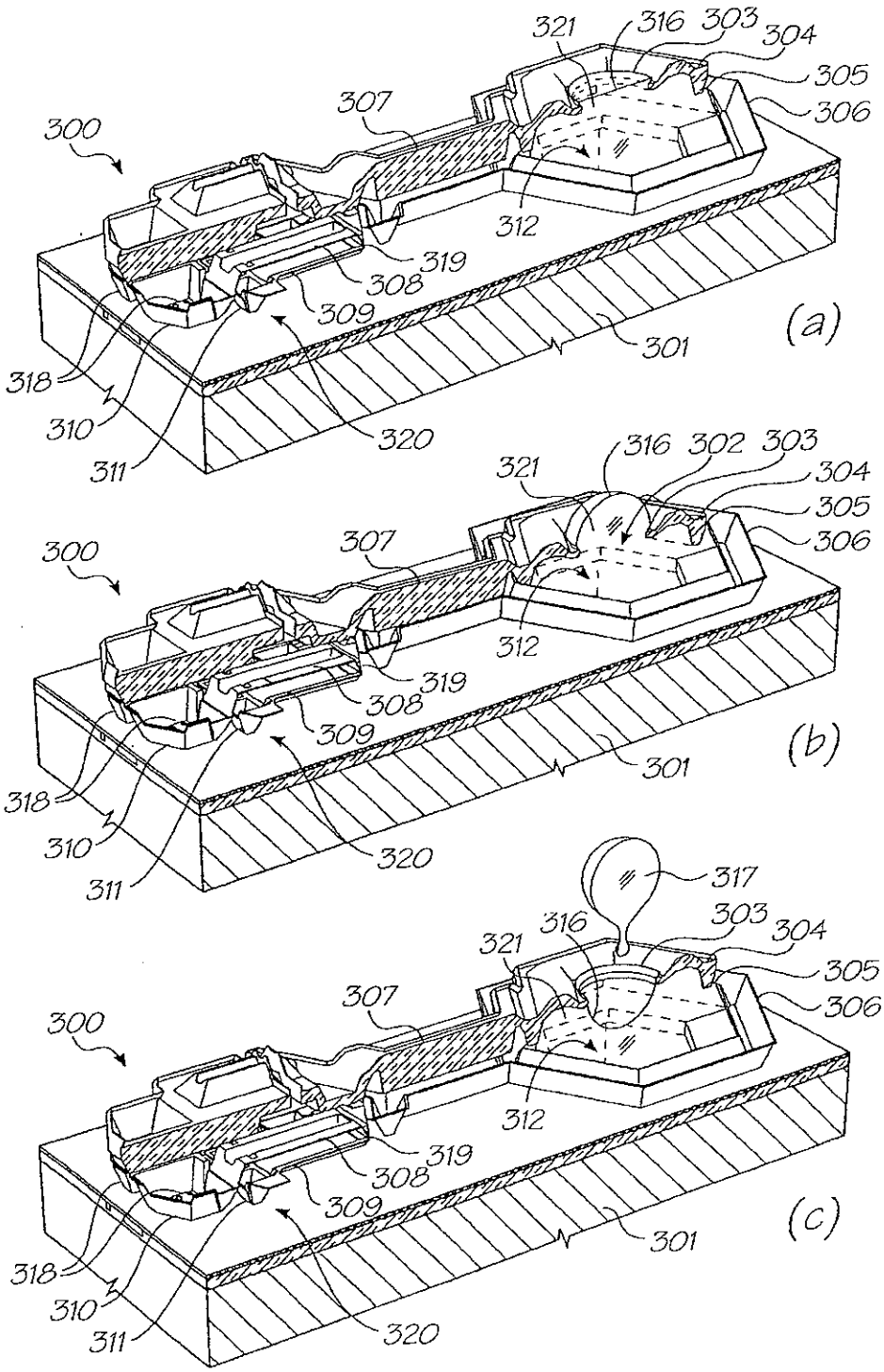
321
316
303
304
305
306
307
300
312
319
308
309
318
310
311
320
301
(a)
316
302
303
304
305
306
321
307
300
312
319
308
309
318
310
311
320
301
(b)
317
316
303
304
321
305
306
307
300
312
319
308
309
318
310
311
320
301
(c)

FIG. 19

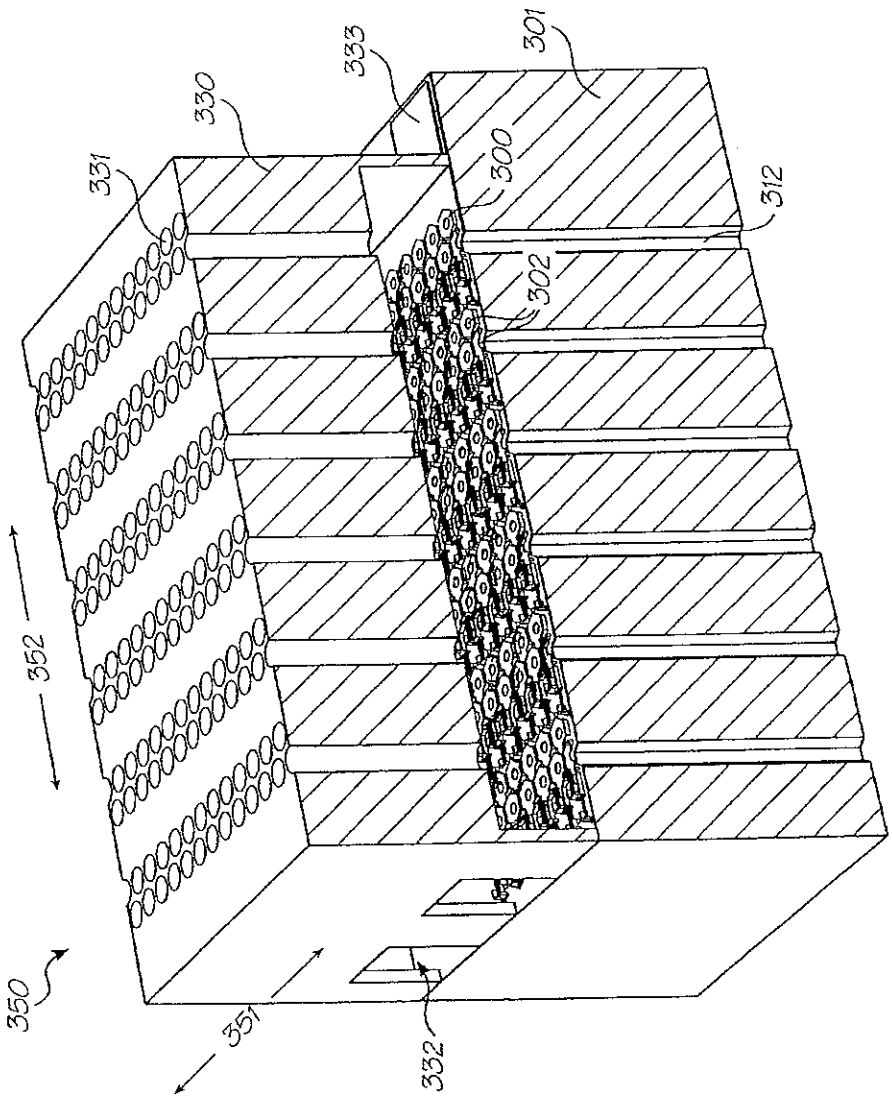

FIG. 20

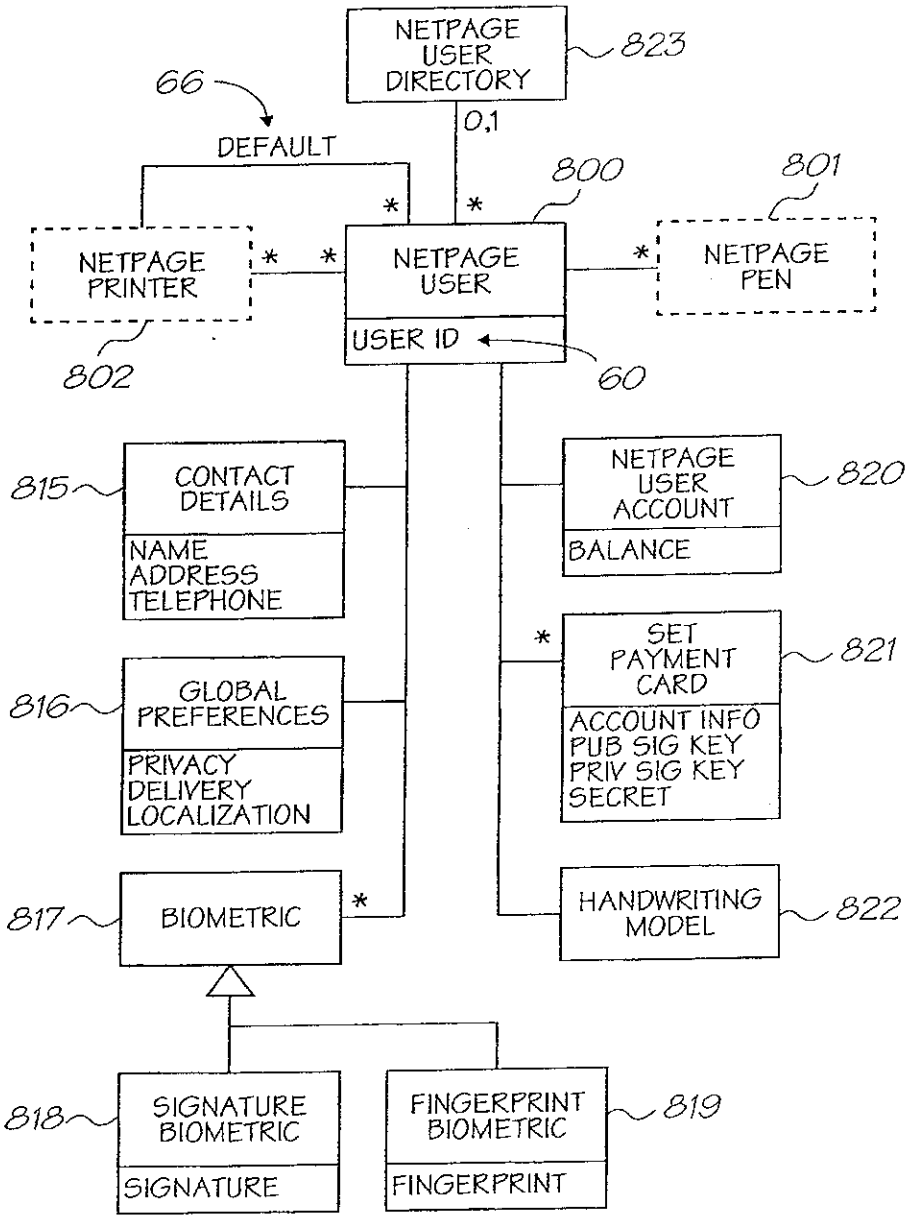
NETPAGE USER DIRECTORY
823
66
DEFAULT
0,1
800
801
NETPAGE PRINTER
NETPAGE USER
NETPAGE PEN
USER ID
60
802
815
CONTACT DETAILS
NAME
ADDRESS
TELEPHONE
NETPAGE USER ACCOUNT
820
BALANCE
816
GLOBAL PREFERENCES
PRIVACY
DELIVERY
LOCALIZATION
SET PAYMENT CARD
821
ACCOUNT INFO
PUB SIG KEY
PRIV SIG KEY
SECRET
817
BIOMETRIC
HANDWRITING MODEL
822
818
SIGNATURE BIOMETRIC
SIGNATURE
FINGERPRINT BIOMETRIC
819
FINGERPRINT

FIG. 21

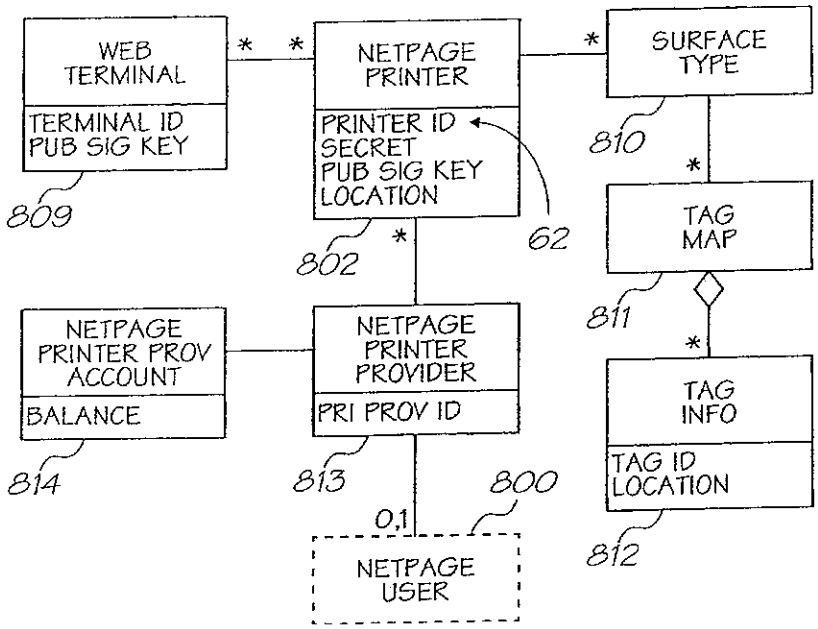
WEB TERMINAL
TERMINAL ID
PUB SIG KEY
809
NETPAGE PRINTER
PRINTER ID
SECRET
PUB SIG KEY
LOCATION
802
62
SURFACE TYPE
810
TAG MAP
811
TAG INFO
TAG ID
LOCATION
812
NETPAGE PRINTER PROV ACCOUNT
BALANCE
814
NETPAGE PRINTER PROVIDER
PRI PROV ID
813
800
0,1
NETPAGE USER
*

FIG. 22

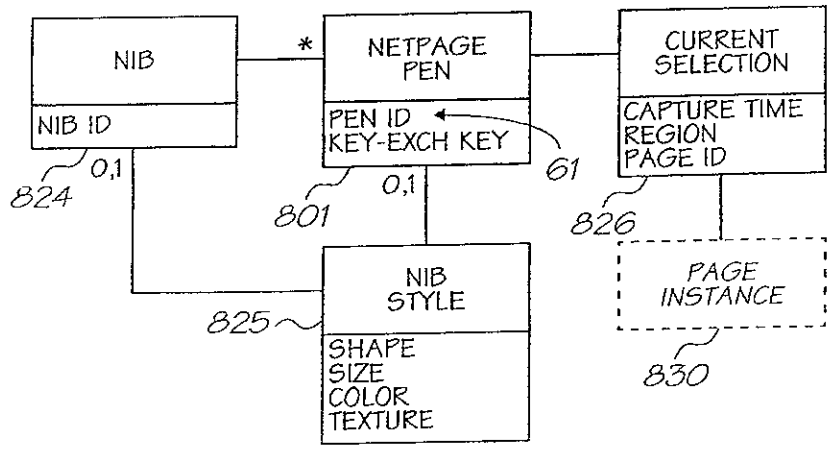
NIB
NIB ID
824
0,1
NETPAGE PEN
PEN ID
KEY-EXCH KEY
801
61
CURRENT SELECTION
CAPTURE TIME
REGION
PAGE ID
826
NIB STYLE
SHAPE
SIZE
COLOR
TEXTURE
825
PAGE INSTANCE
830
*

FIG. 23

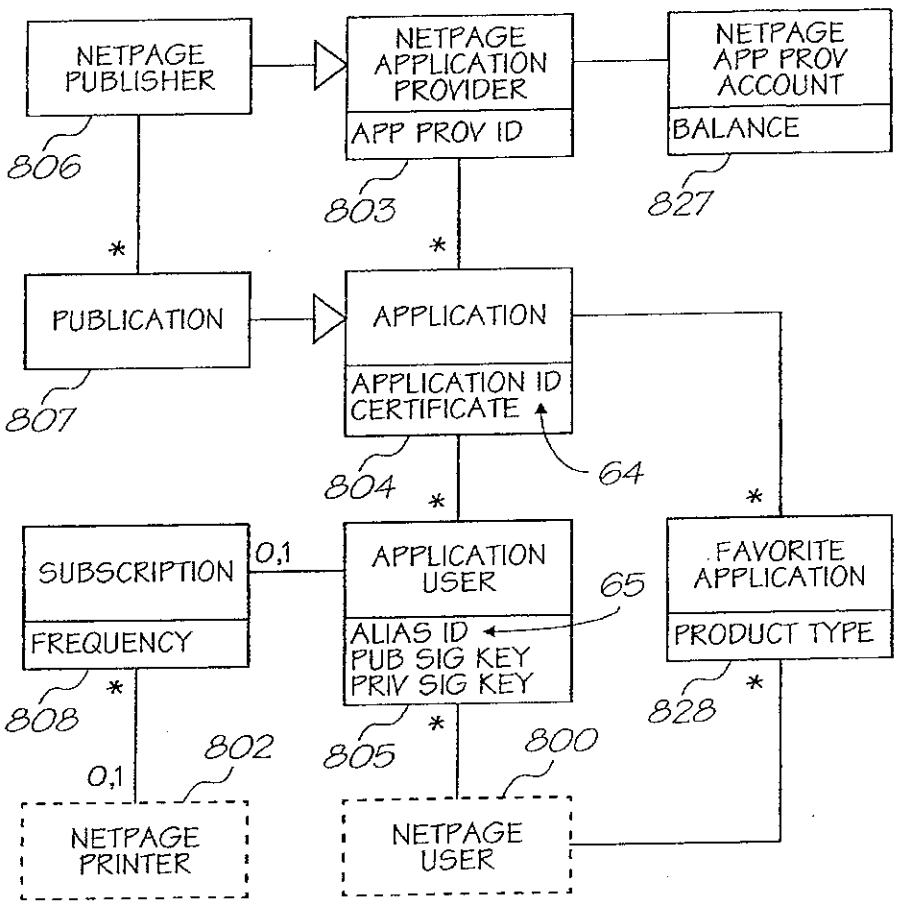
NETPAGE PUBLISHER
806
NETPAGE APPLICATION PROVIDER
APP PROV ID
803
NETPAGE APP PROV ACCOUNT
BALANCE
827
PUBLICATION
807
APPLICATION
APPLICATION ID
CERTIFICATE
804
64
SUBSCRIPTION
FREQUENCY
808
0,1
APPLICATION USER
ALIAS ID
PUB SIG KEY
PRIV SIG KEY
805
65
FAVORITE APPLICATION
PRODUCT TYPE
828
802
800
NETPAGE PRINTER
NETPAGE USER

FIG. 24

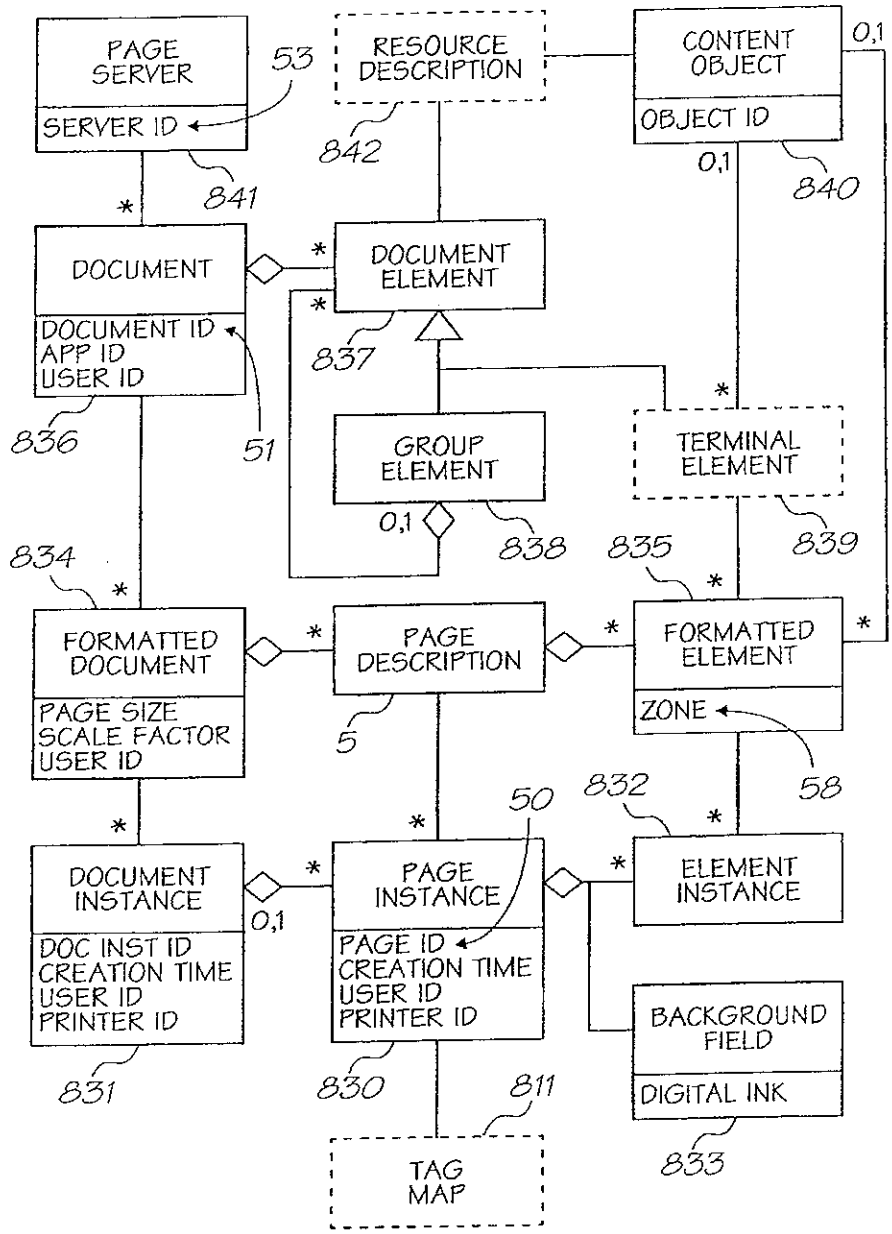
PAGE SERVER
SERVER ID
53
RESOURCE DESCRIPTION
842
CONTENT OBJECT
OBJECT ID
0,1
0,1
840
841
*
DOCUMENT
DOCUMENT ID
APP ID
USER ID
836
51
*
*
DOCUMENT ELEMENT
837
*
GROUP ELEMENT
0,1
838
*
TERMINAL ELEMENT
839
834
*
835
*
FORMATTED DOCUMENT
PAGE SIZE
SCALE FACTOR
USER ID
*
*
PAGE DESCRIPTION
5
*
*
FORMATTED ELEMENT
ZONE
58
*
*
50
832
*
DOCUMENT INSTANCE
DOC INST ID
CREATION TIME
USER ID
PRINTER ID
831
*
0,1
PAGE INSTANCE
PAGE ID
CREATION TIME
USER ID
PRINTER ID
830
*
ELEMENT INSTANCE
BACKGROUND FIELD
DIGITAL INK
833
811
TAG MAP

FIG. 25

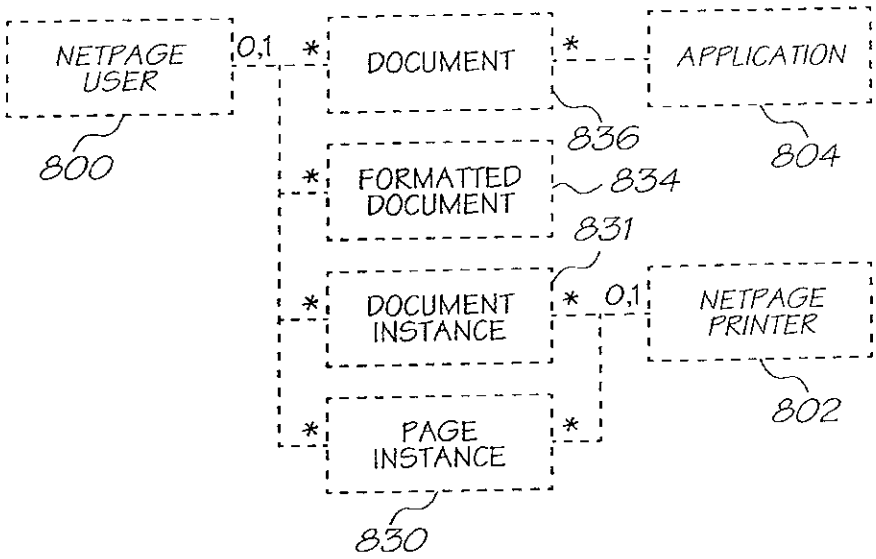
NETPAGE USER
0,1
*
DOCUMENT
*
APPLICATION
800
836
804
*
FORMATTED DOCUMENT
834
831
*
DOCUMENT INSTANCE
*
0,1
NETPAGE PRINTER
802
*
PAGE INSTANCE
*
830

FIG. 26

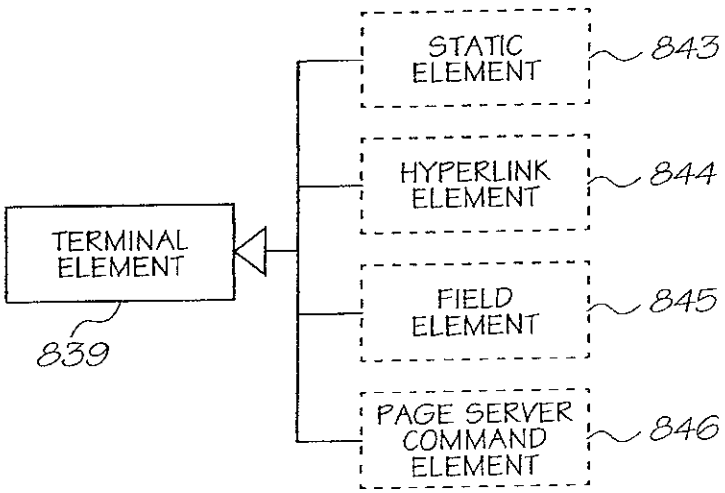
STATIC ELEMENT
843
HYPERLINK ELEMENT
844
TERMINAL ELEMENT
FIELD ELEMENT
845
839
PAGE SERVER COMMAND ELEMENT
846

FIG. 27

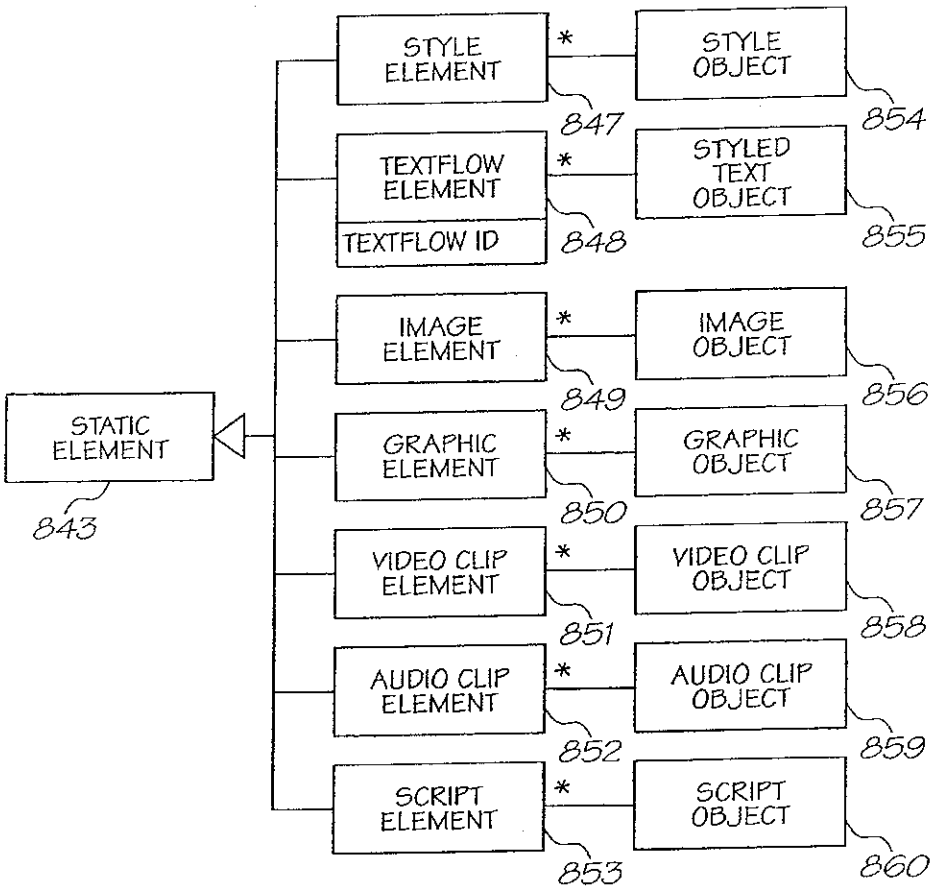
STATIC ELEMENT
843
STYLE ELEMENT
847
STYLE OBJECT
854
TEXTFLOW ELEMENT
TEXTFLOW ID
848
STYLED TEXT OBJECT
855
IMAGE ELEMENT
849
IMAGE OBJECT
856
GRAPHIC ELEMENT
850
GRAPHIC OBJECT
857
VIDEO CLIP ELEMENT
851
VIDEO CLIP OBJECT
858
AUDIO CLIP ELEMENT
852
AUDIO CLIP OBJECT
859
SCRIPT ELEMENT
853
SCRIPT OBJECT
860
*

FIG. 28

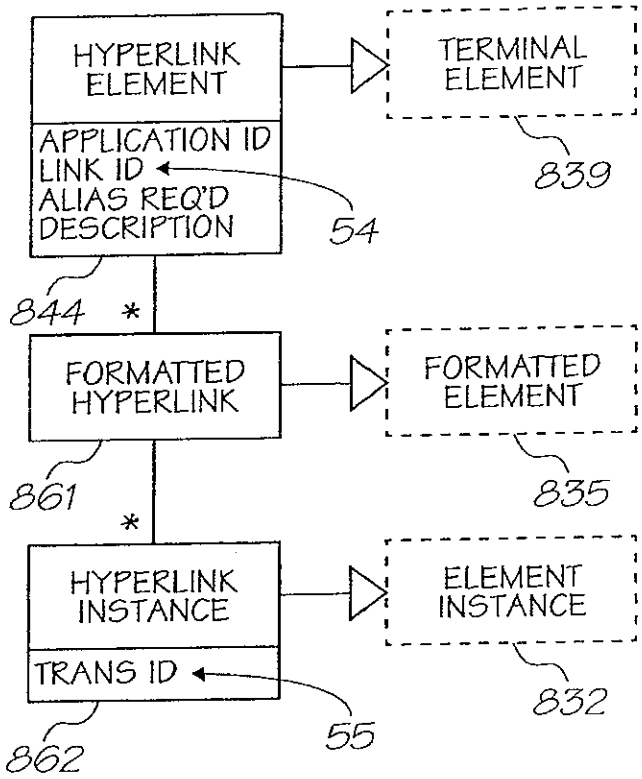
HYPERLINK ELEMENT
APPLICATION ID
LINK ID
ALIAS REQ'D
DESCRIPTION
54
TERMINAL ELEMENT
839
844
*
FORMATTED HYPERLINK
861
FORMATTED ELEMENT
835
*
HYPERLINK INSTANCE
TRANS ID
55
862
ELEMENT INSTANCE
832

FIG. 29

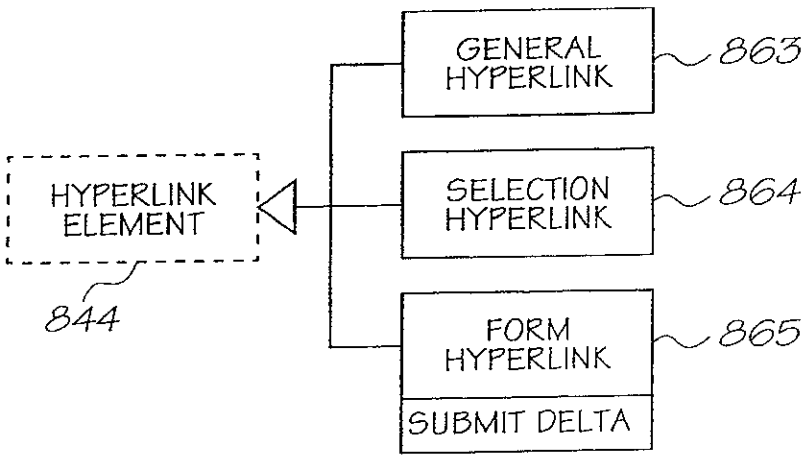
GENERAL HYPERLINK
863
HYPERLINK ELEMENT
844
SELECTION HYPERLINK
864
FORM HYPERLINK
865
SUBMIT DELTA

FIG. 30

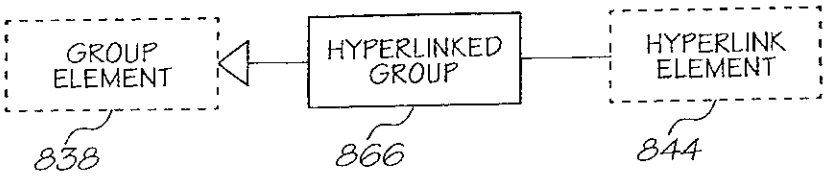
GROUP ELEMENT
HYPERLINKED GROUP
HYPERLINK ELEMENT
838
866
844

FIG. 31

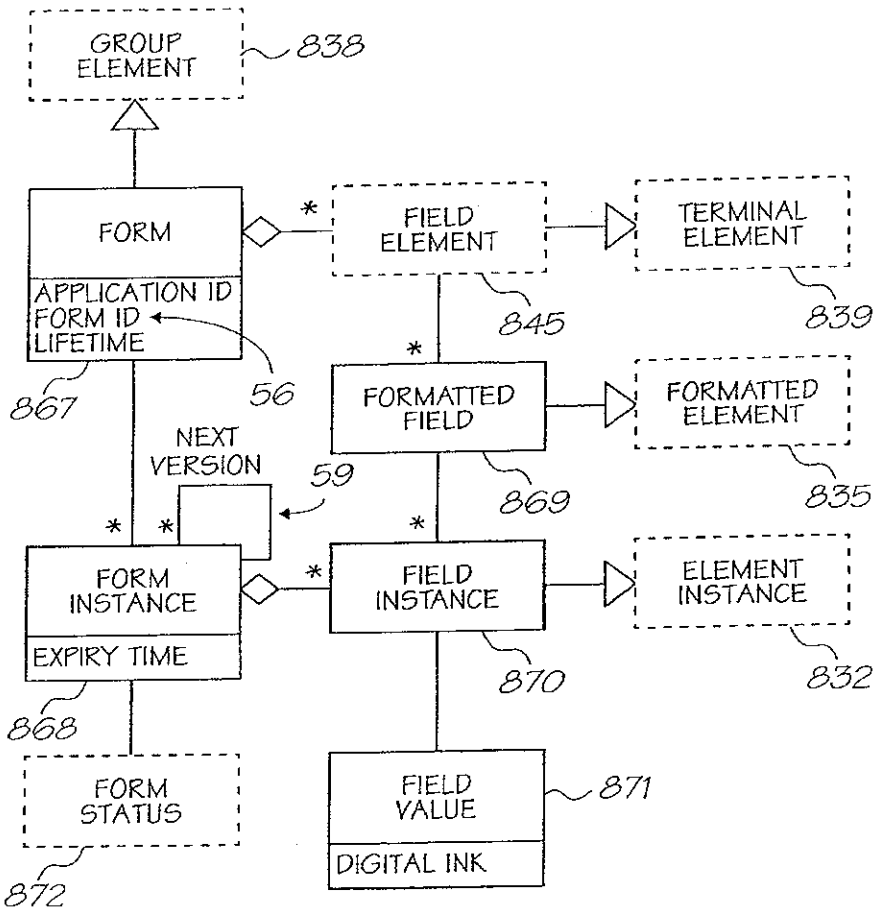
GROUP ELEMENT
838
FORM
APPLICATION ID
FORM ID
LIFETIME
867
56
FIELD ELEMENT
845
TERMINAL ELEMENT
839
FORMATTED FIELD
869
FORMATTED ELEMENT
835
NEXT VERSION
59
FORM INSTANCE
EXPIRY TIME
868
FIELD INSTANCE
870
ELEMENT INSTANCE
832
FORM STATUS
872
FIELD VALUE
DIGITAL INK
871

FIG. 32

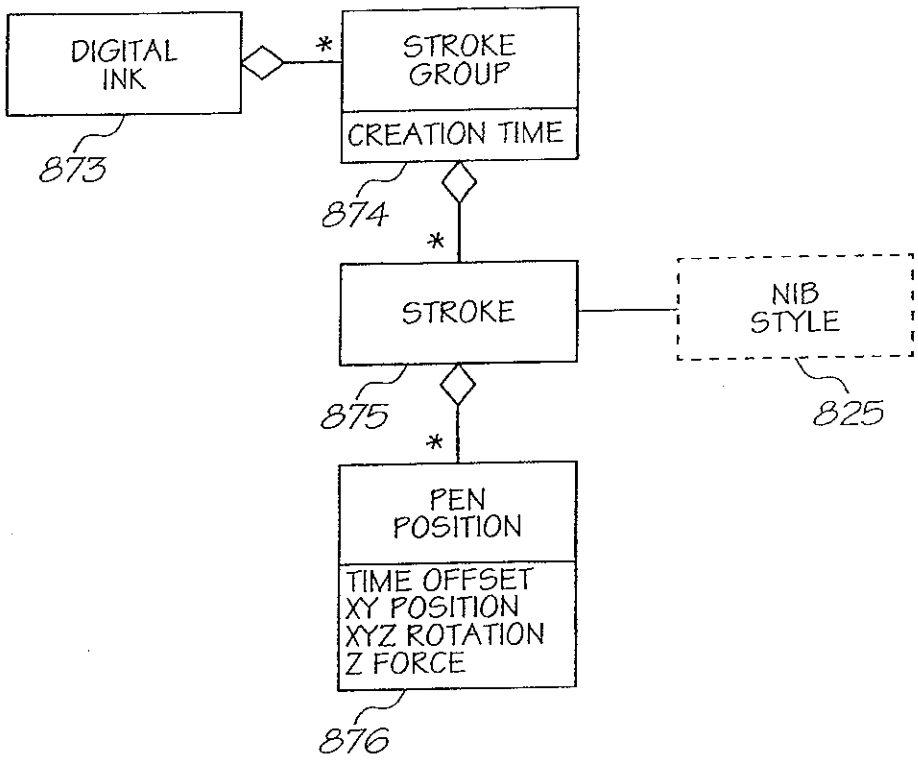
DIGITAL INK
*
STROKE GROUP
CREATION TIME
873
874
*
STROKE
NIB STYLE
875
825
*
PEN POSITION
TIME OFFSET
XY POSITION
XYZ ROTATION
Z FORCE
876

FIG. 33

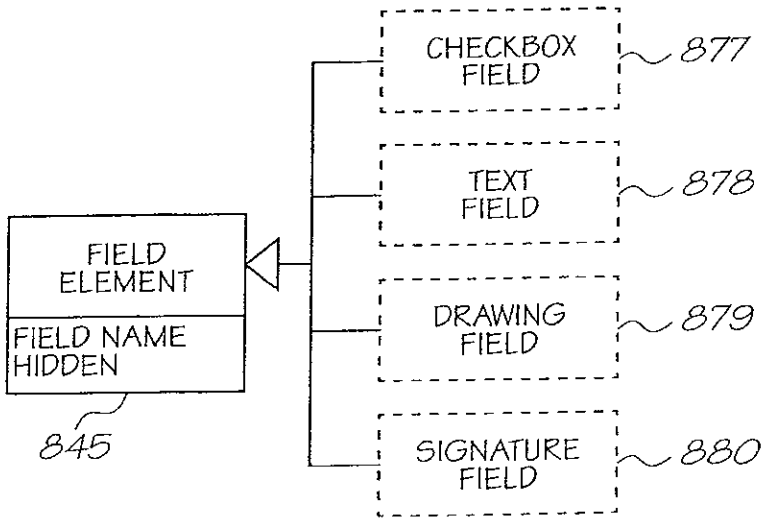
CHECKBOX FIELD
877
TEXT FIELD
878
FIELD ELEMENT
FIELD NAME
HIDDEN
DRAWING FIELD
879
SIGNATURE FIELD
880
845

FIG. 34

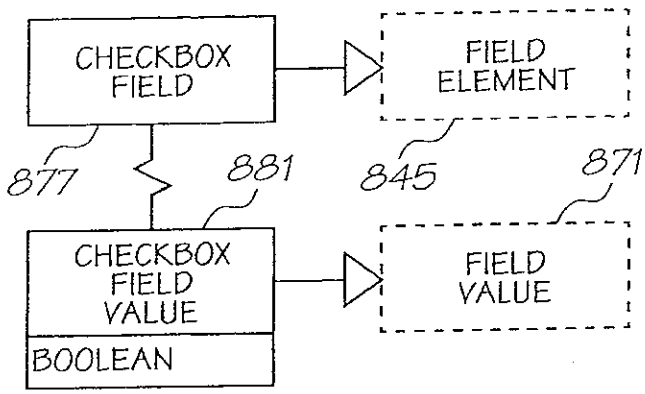

FIG. 35

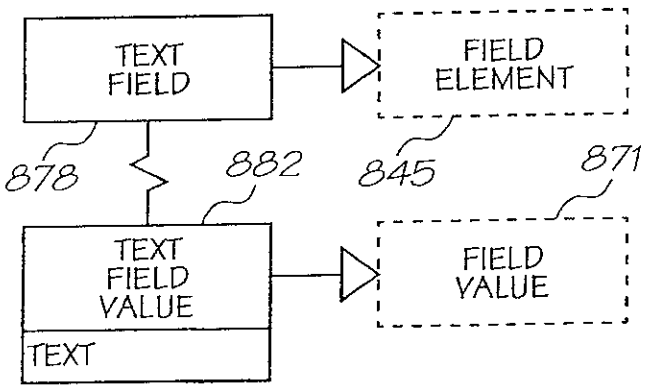

FIG. 36

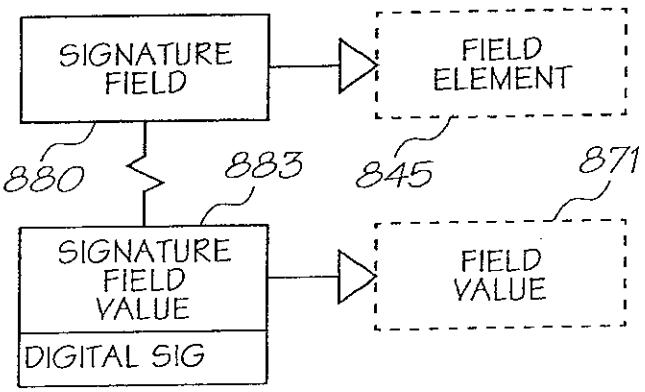

FIG. 37

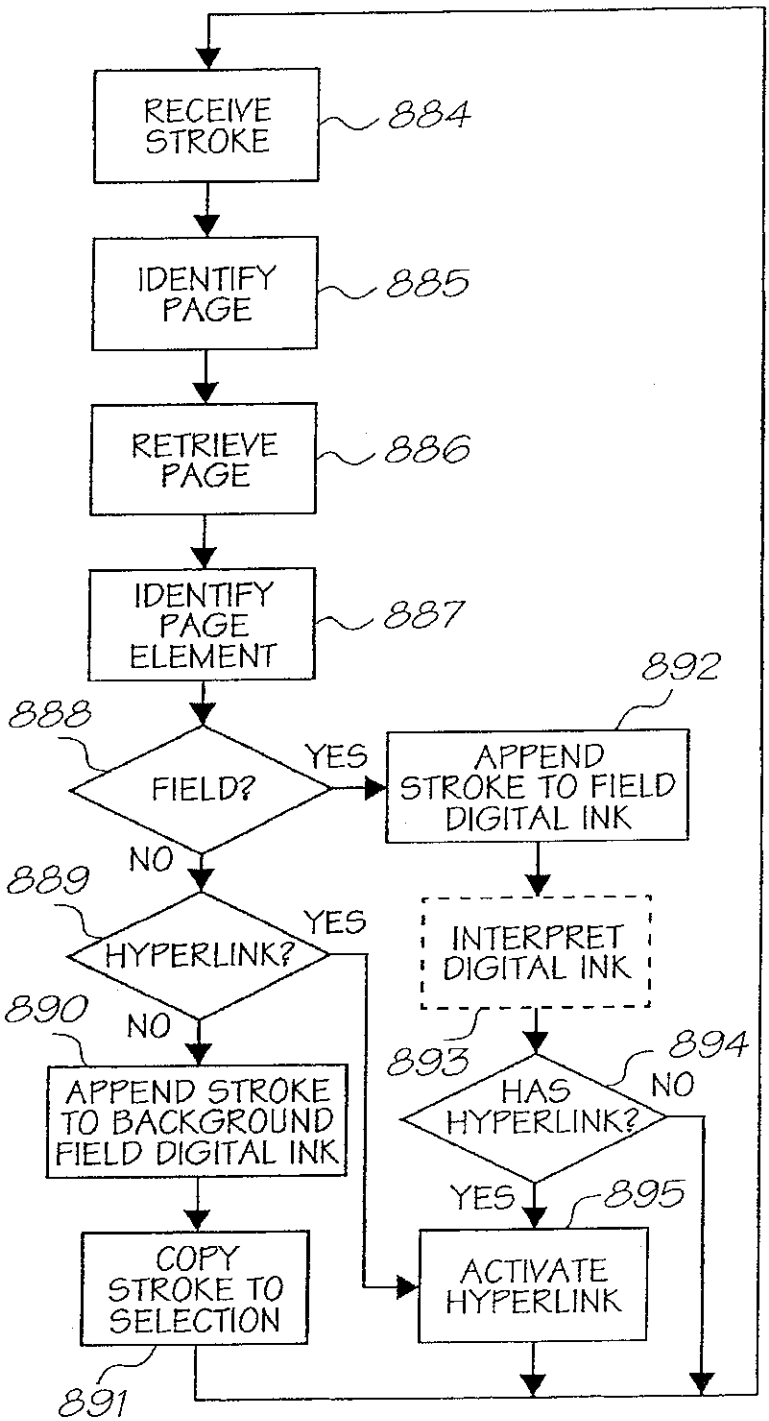
RECEIVE STROKE
884
IDENTIFY PAGE
885
RETRIEVE PAGE
886
IDENTIFY PAGE ELEMENT
887
888
FIELD?
YES
892
APPEND STROKE TO FIELD DIGITAL INK
NO
889
HYPERLINK?
YES
INTERPRET DIGITAL INK
890
NO
893
894
HAS HYPERLINK?
NO
APPEND STROKE TO BACKGROUND FIELD DIGITAL INK
YES
895
COPY STROKE TO SELECTION
ACTIVATE HYPERLINK
891

FIG. 38

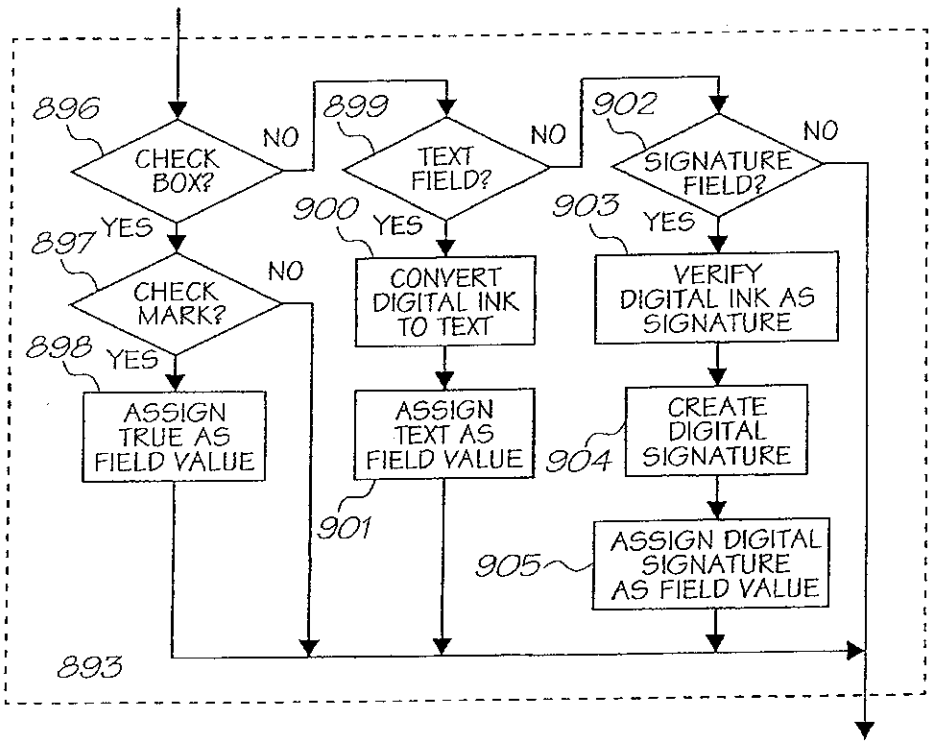
896
CHECK BOX?
NO
899
TEXT FIELD?
NO
902
SIGNATURE FIELD?
NO
YES
897
CHECK MARK?
NO
YES
898
ASSIGN TRUE AS FIELD VALUE
900
YES
CONVERT DIGITAL INK TO TEXT
ASSIGN TEXT AS FIELD VALUE
901
903
YES
VERIFY DIGITAL INK AS SIGNATURE
CREATE DIGITAL SIGNATURE
904
ASSIGN DIGITAL SIGNATURE AS FIELD VALUE
905
893

FIG. 38a

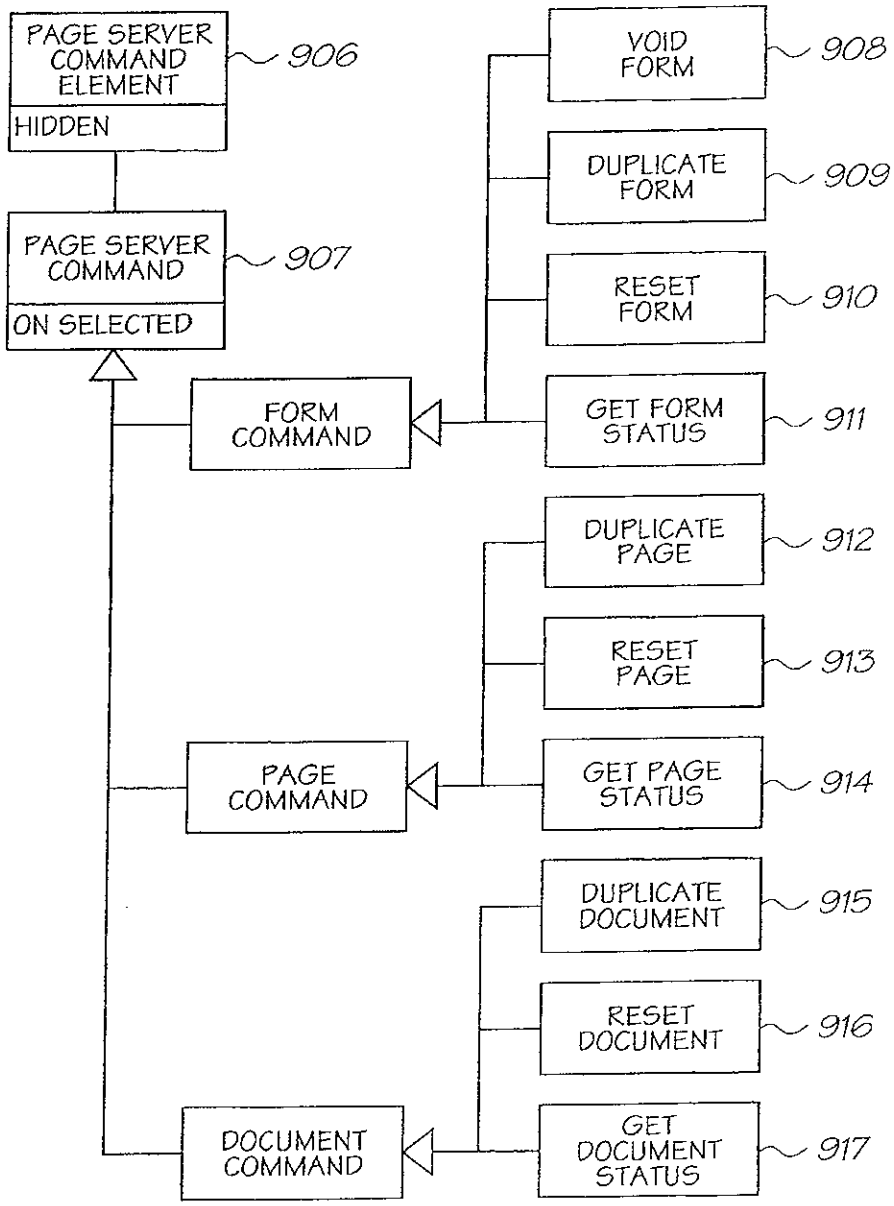
PAGE SERVER COMMAND ELEMENT
HIDDEN
906
PAGE SERVER COMMAND
ON SELECTED
907
FORM COMMAND
PAGE COMMAND
DOCUMENT COMMAND
VOID FORM
908
DUPLICATE FORM
909
RESET FORM
910
GET FORM STATUS
911
DUPLICATE PAGE
912
RESET PAGE
913
GET PAGE STATUS
914
DUPLICATE DOCUMENT
915
RESET DOCUMENT
916
GET DOCUMENT STATUS
917

FIG. 39

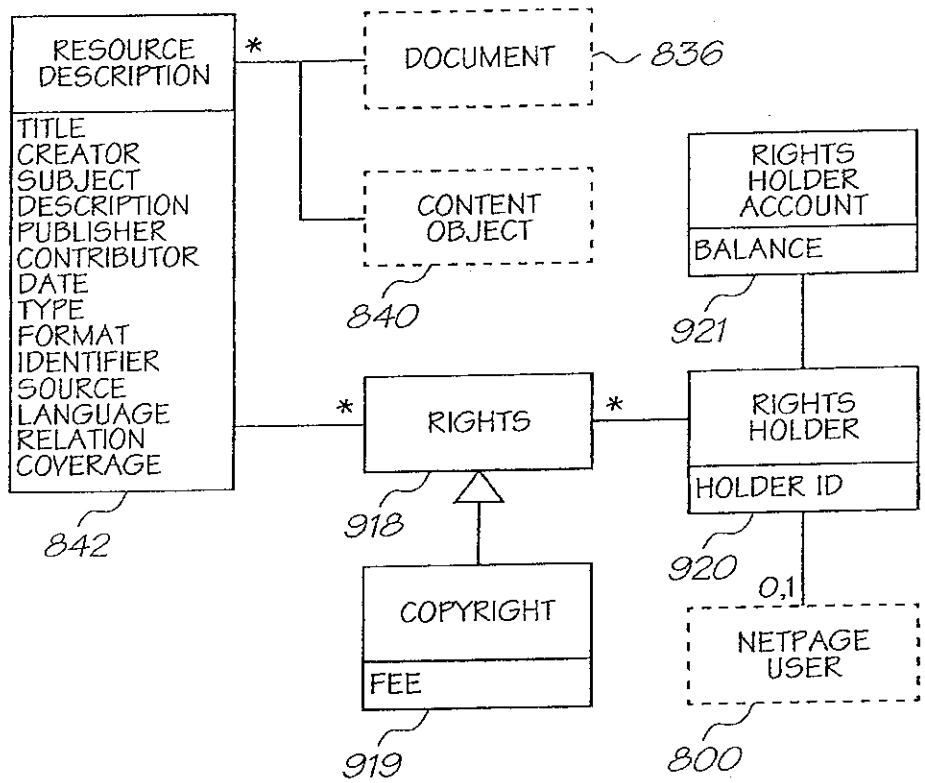
RESOURCE DESCRIPTION
TITLE
CREATOR
SUBJECT
DESCRIPTION
PUBLISHER
CONTRIBUTOR
DATE
TYPE
FORMAT
IDENTIFIER
SOURCE
LANGUAGE
RELATION
COVERAGE
842
*
DOCUMENT
836
CONTENT OBJECT
840
*
RIGHTS
918
*
RIGHTS HOLDER ACCOUNT
BALANCE
921
RIGHTS HOLDER
HOLDER ID
920
0,1
NETPAGE USER
800
COPYRIGHT
FEE
919

FIG. 40

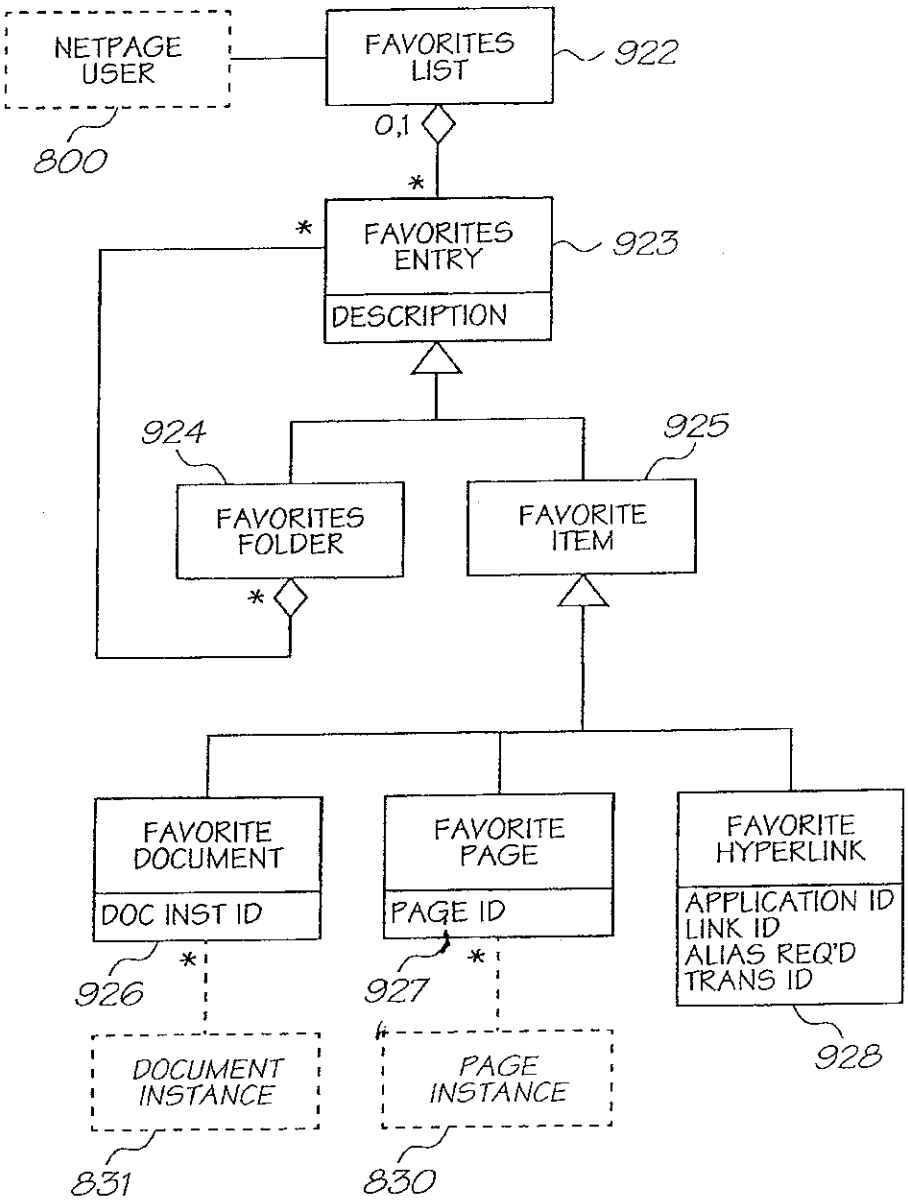
NETPAGE USER
800
FAVORITES LIST
922
0,1
*
*
FAVORITES ENTRY
DESCRIPTION
923
924
925
FAVORITES FOLDER
FAVORITE ITEM
*
FAVORITE DOCUMENT
DOC INST ID
FAVORITE PAGE
PAGE ID
FAVORITE HYPERLINK
APPLICATION ID
LINK ID
ALIAS REQ'D
TRANS ID
926
927
928
DOCUMENT INSTANCE
PAGE INSTANCE
831
830

FIG. 41

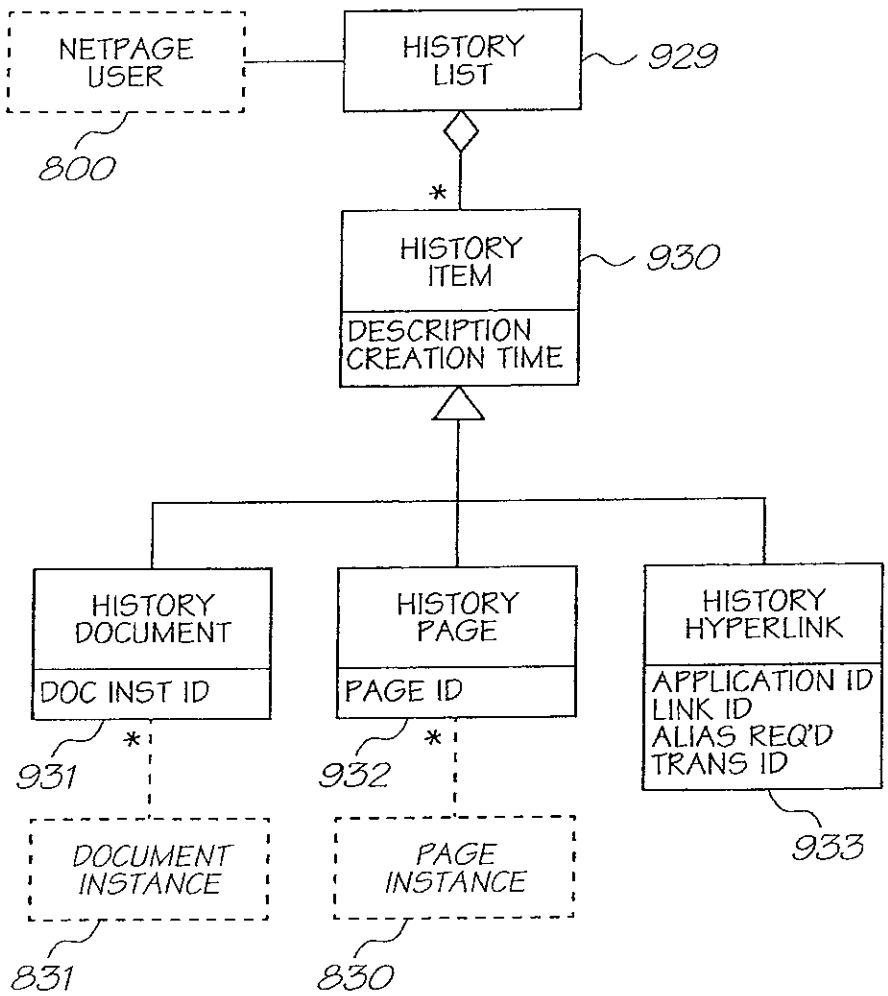
NETPAGE USER
800
HISTORY LIST
929
*
HISTORY ITEM
DESCRIPTION
CREATION TIME
930
HISTORY DOCUMENT
DOC INST ID
931
*
DOCUMENT INSTANCE
831
HISTORY PAGE
PAGE ID
932
*
PAGE INSTANCE
830
HISTORY HYPERLINK
APPLICATION ID
LINK ID
ALIAS REQ'D
TRANS ID
933

FIG. 42

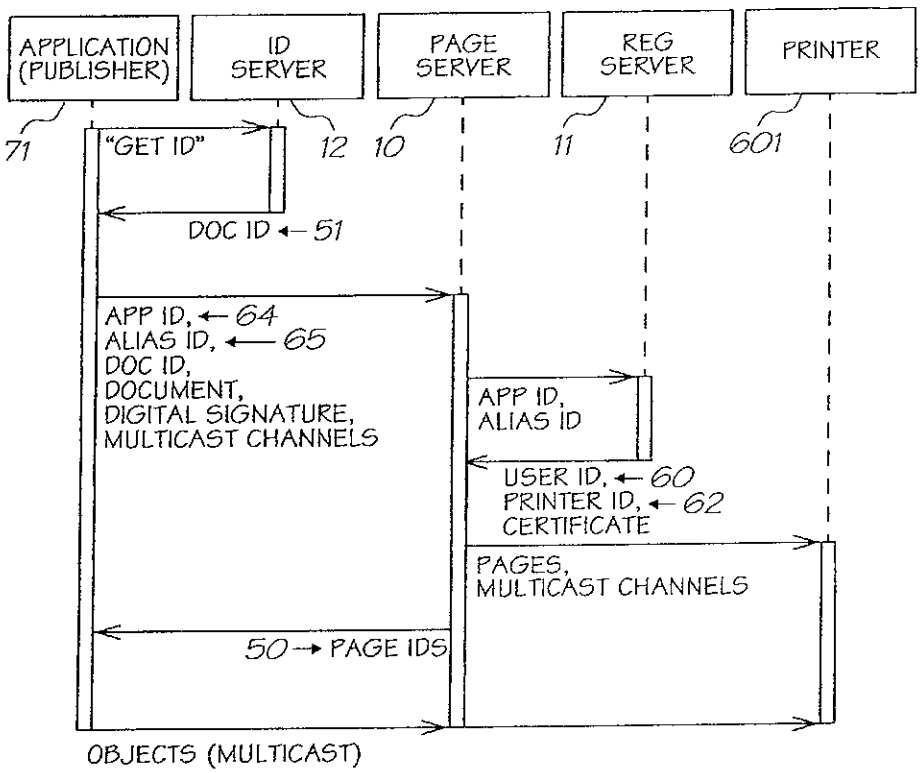
APPLICATION (PUBLISHER)
ID SERVER
PAGE SERVER
REG SERVER
PRINTER
71
12
10
11
601
"GET ID"
DOC ID ← 51
APP ID, ← 64
ALIAS ID, ← 65
DOC ID,
DOCUMENT,
DIGITAL SIGNATURE,
MULTICAST CHANNELS
APP ID,
ALIAS ID
USER ID, ← 60
PRINTER ID, ← 62
CERTIFICATE
PAGES,
MULTICAST CHANNELS
50 → PAGE IDS
OBJECTS (MULTICAST)

FIG. 43

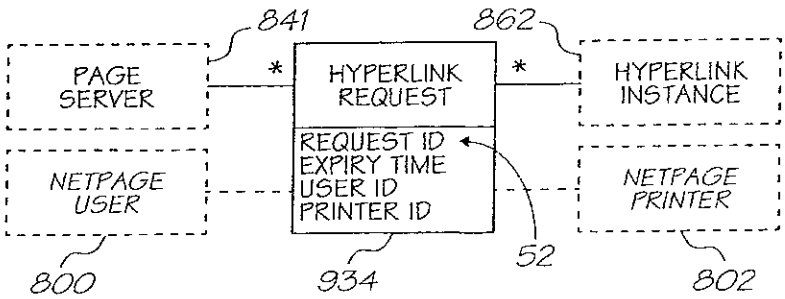
841
862
PAGE SERVER
*
HYPERLINK REQUEST
*
HYPERLINK INSTANCE
NETPAGE USER
REQUEST ID
EXPIRY TIME
USER ID
PRINTER ID
NETPAGE PRINTER
52
800
934
802

FIG. 44

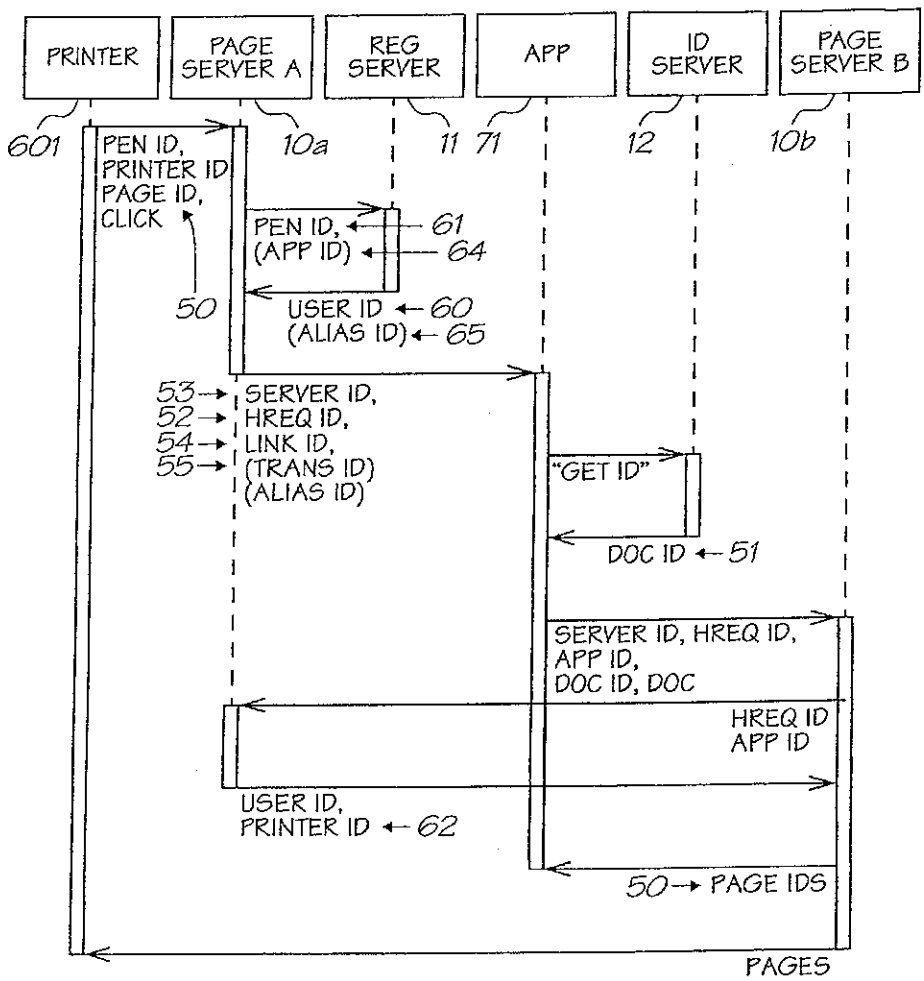
PRINTER
PAGE SERVER A
REG SERVER
APP
ID SERVER
PAGE SERVER B
601
10a
11
71
12
10b
PEN ID, PRINTER ID PAGE ID, CLICK
50
PEN ID, 61
(APP ID) 64
USER ID 60
(ALIAS ID) 65
53 SERVER ID,
52 HREQ ID,
54 LINK ID,
55 (TRANS ID)
(ALIAS ID)
"GET ID"
DOC ID 51
SERVER ID, HREQ ID, APP ID, DOC ID, DOC
HREQ ID
APP ID
USER ID, PRINTER ID 62
50 PAGE IDS
PAGES

FIG. 45

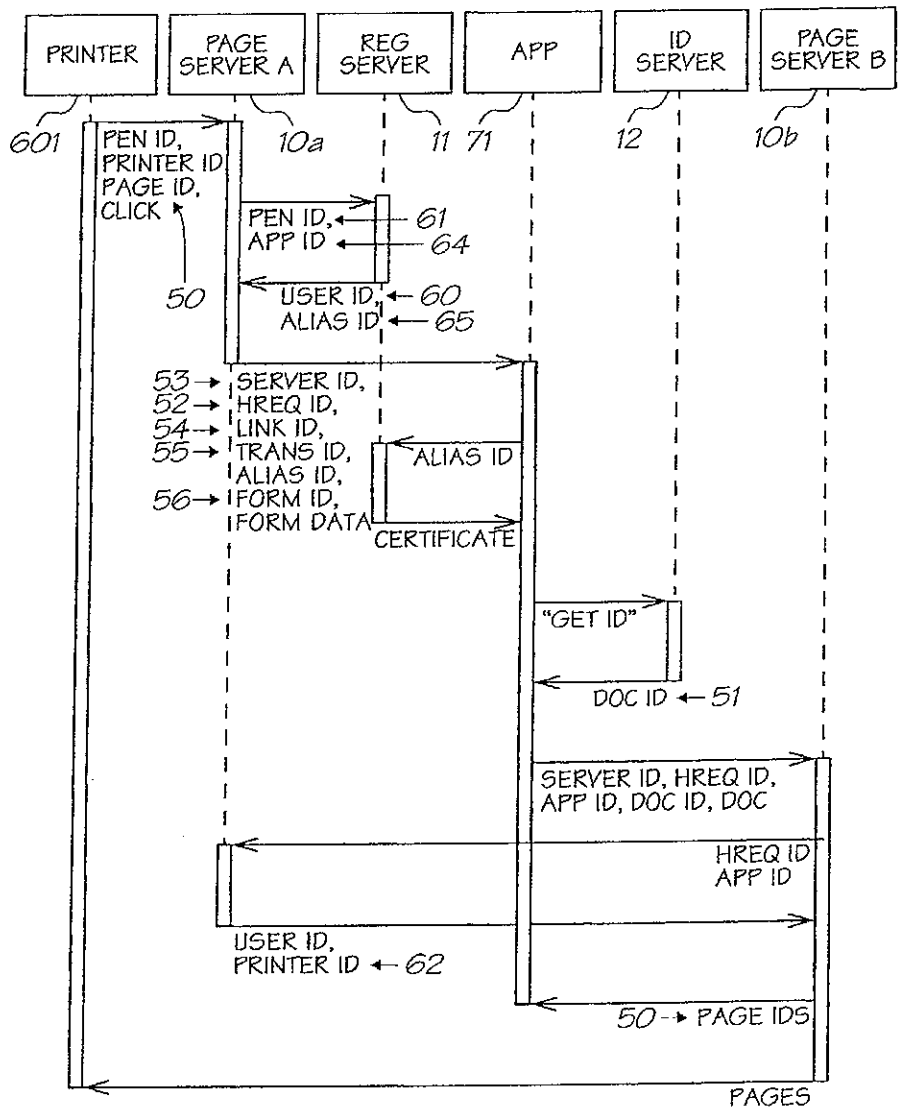
PRINTER
PAGE SERVER A
REG SERVER
APP
ID SERVER
PAGE SERVER B
601
10a
11
71
12
10b
PEN ID,
PRINTER ID
PAGE ID,
CLICK
50
PEN ID,
APP ID
61
64
USER ID,
ALIAS ID
60
65
53
52
54
55
56
SERVER ID,
HREQ ID,
LINK ID,
TRANS ID,
ALIAS ID,
FORM ID,
FORM DATA
ALIAS ID
CERTIFICATE
"GET ID"
DOC ID
51
SERVER ID, HREQ ID,
APP ID, DOC ID, DOC
HREQ ID
APP ID
USER ID,
PRINTER ID
62
50
PAGE IDS
PAGES

FIG. 46

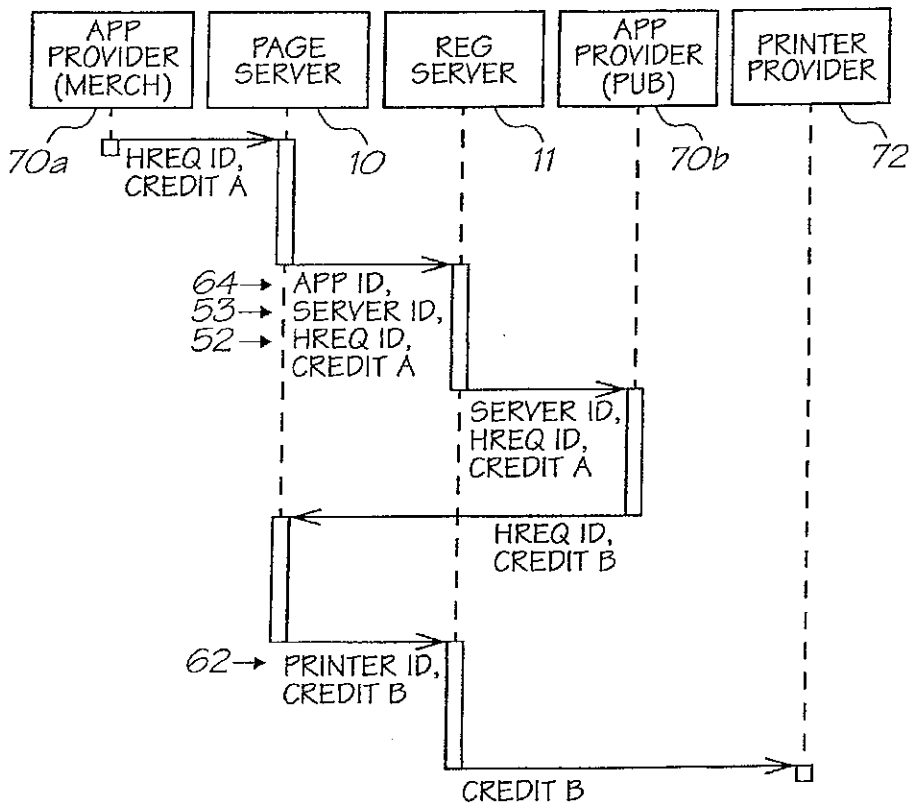
APP PROVIDER (MERCH)
PAGE SERVER
REG SERVER
APP PROVIDER (PUB)
PRINTER PROVIDER
70a
10
11
70b
72
HREQ ID, CREDIT A
64
53
52
APP ID, SERVER ID, HREQ ID, CREDIT A
SERVER ID, HREQ ID, CREDIT A
HREQ ID, CREDIT B
62
PRINTER ID, CREDIT B
CREDIT B

FIG. 47