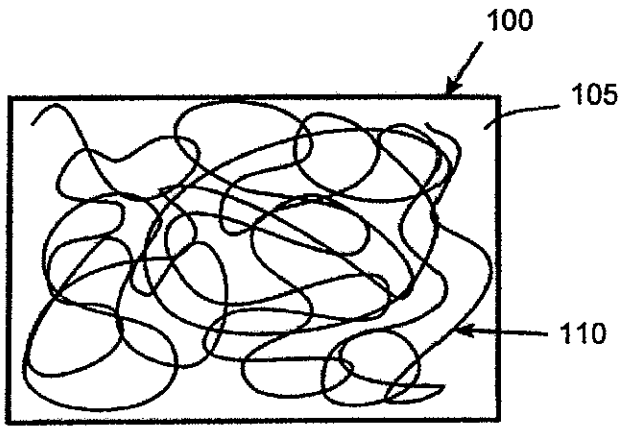

Fig. 1A

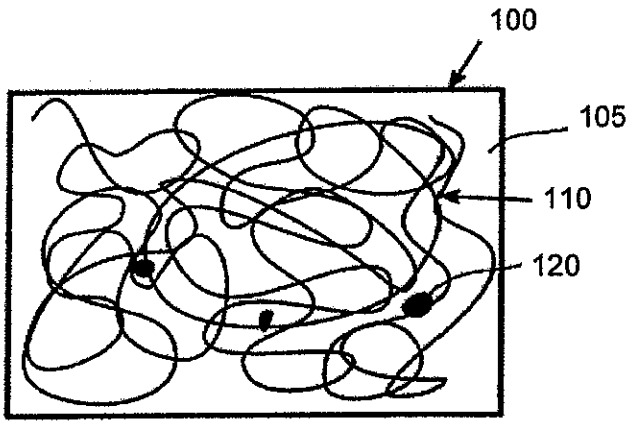

Fig. 1B

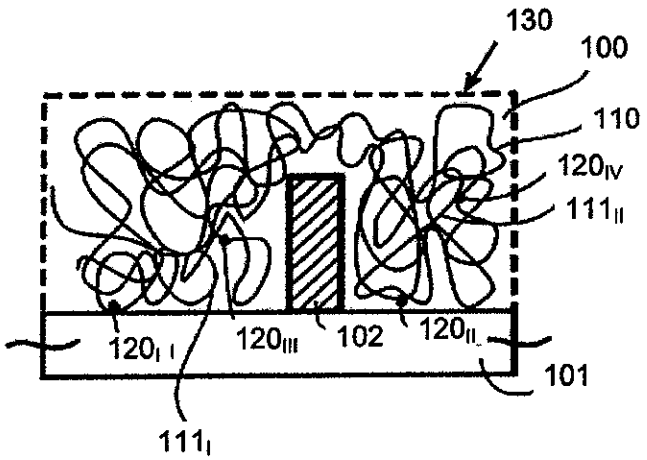
130
100
110
120IV
111II
120I I
120III
102
120II
101
111I

Fig. 1C

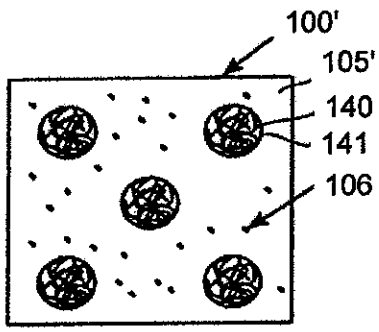
100'
105'
140
141
106

Fig. 1D

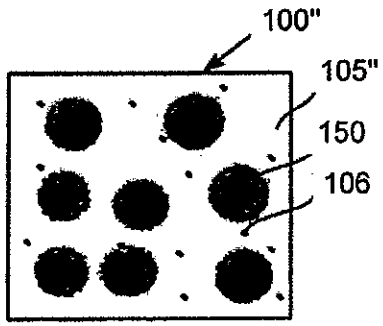

Fig. 1E

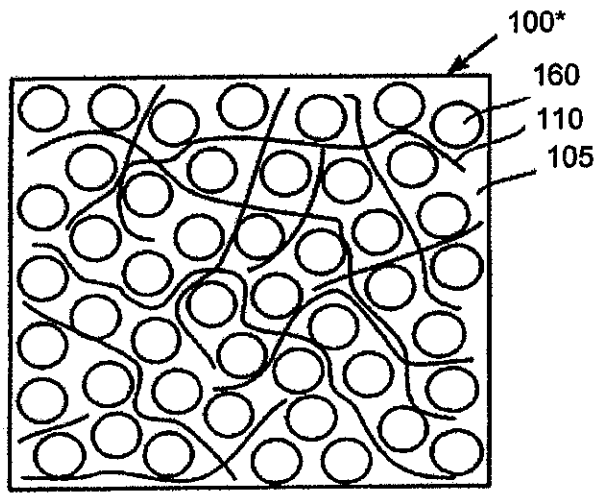

Fig. 1F

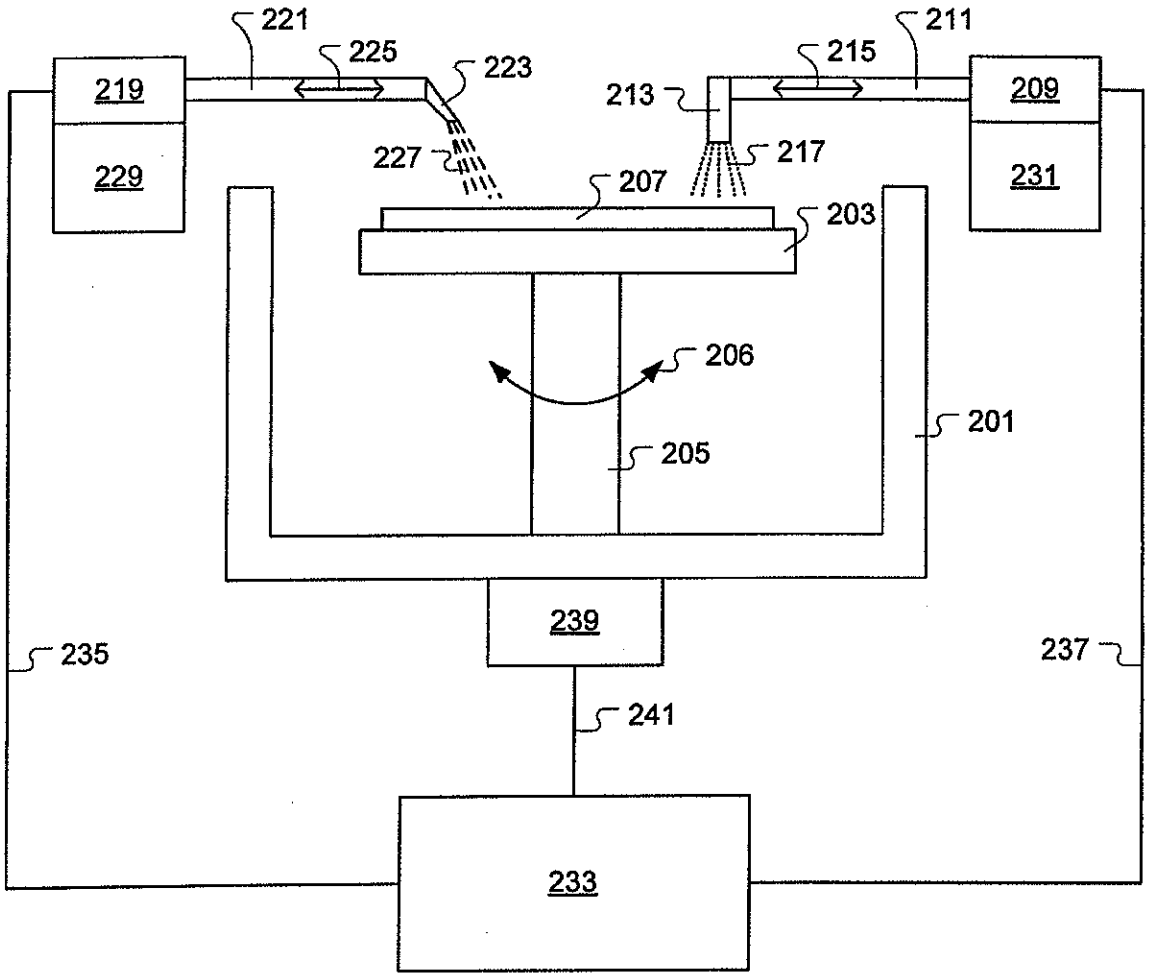
221
225
223
211
215
219
209
213
229
227
217
231
207
203
206
201
205
239
235
237
241
233

Fig. 2

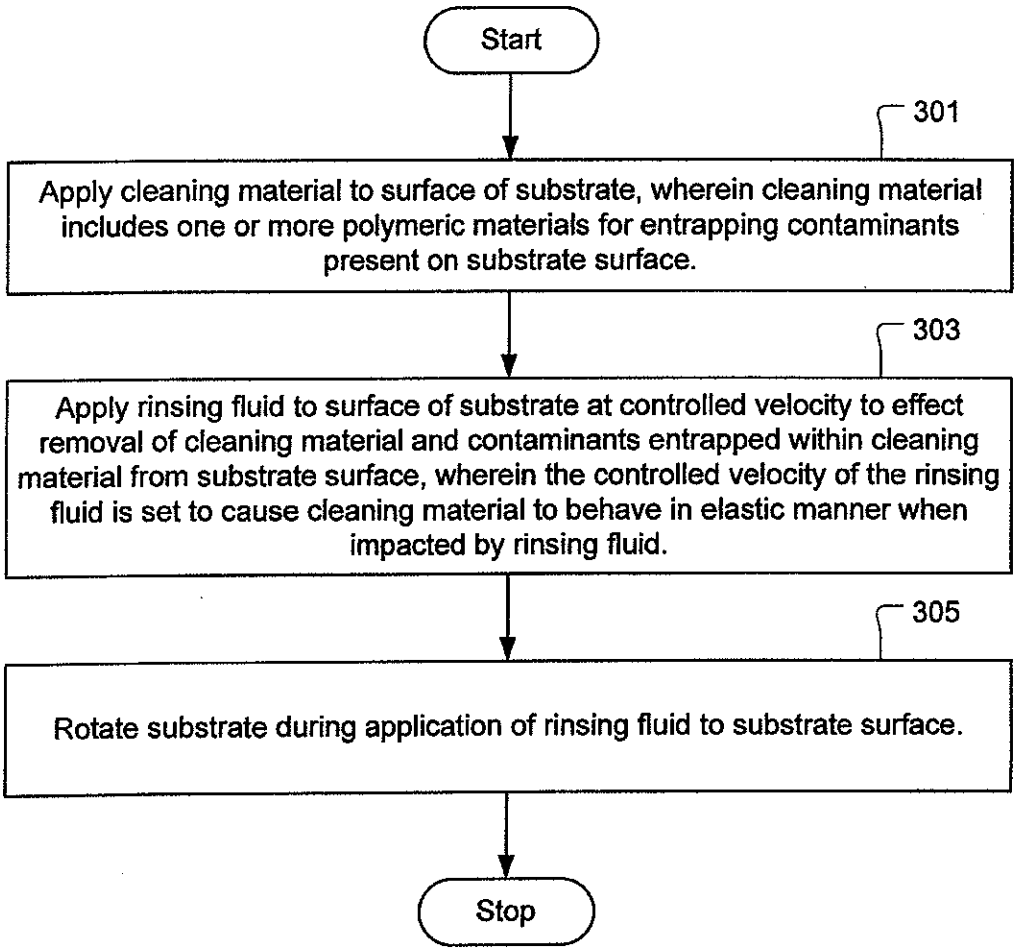
Start
301
Apply cleaning material to surface of substrate, wherein cleaning material includes one or more polymeric materials for entrapping contaminants present on substrate surface.
303
Apply rinsing fluid to surface of substrate at controlled velocity to effect removal of cleaning material and contaminants entrapped within cleaning material from substrate surface, wherein the controlled velocity of the rinsing fluid is set to cause cleaning material to behave in elastic manner when impacted by rinsing fluid.
305
Rotate substrate during application of rinsing fluid to substrate surface.
Stop

Fig. 3

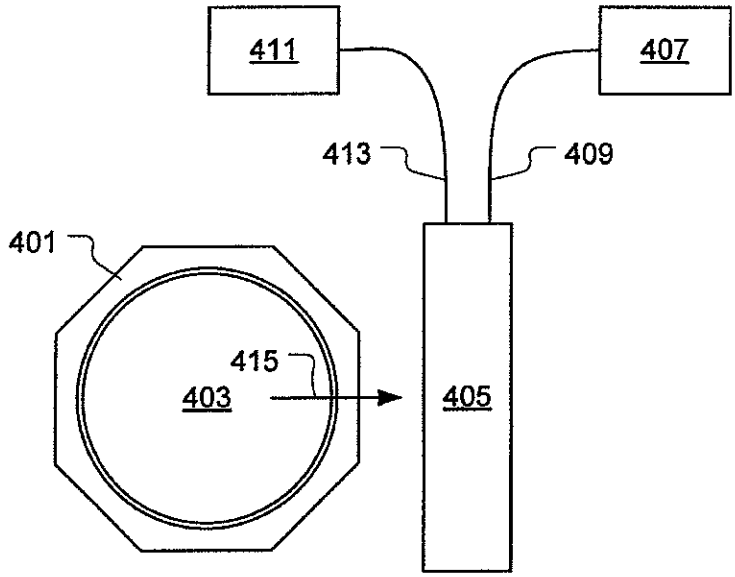
411
407
413
409
401
415
403
405

Fig. 4A

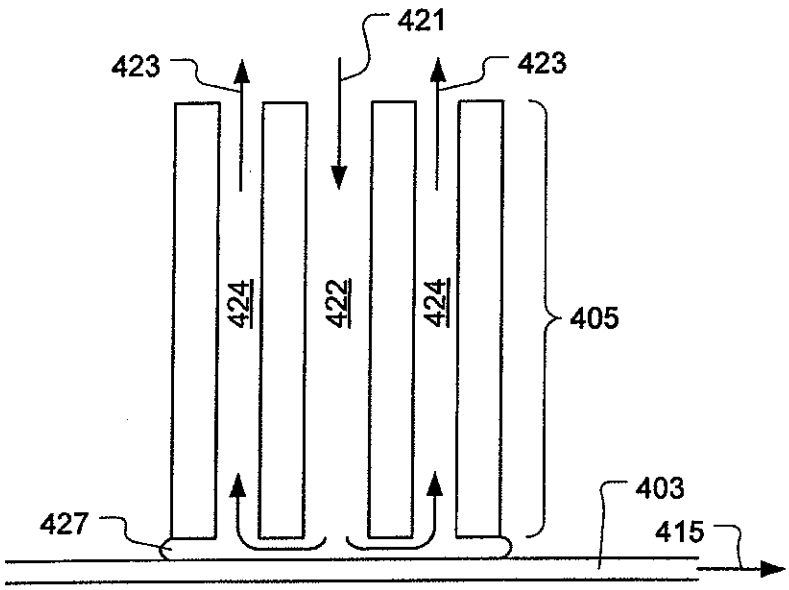
421
423
423
424
422
424
405
403
427
415

Fig. 4B

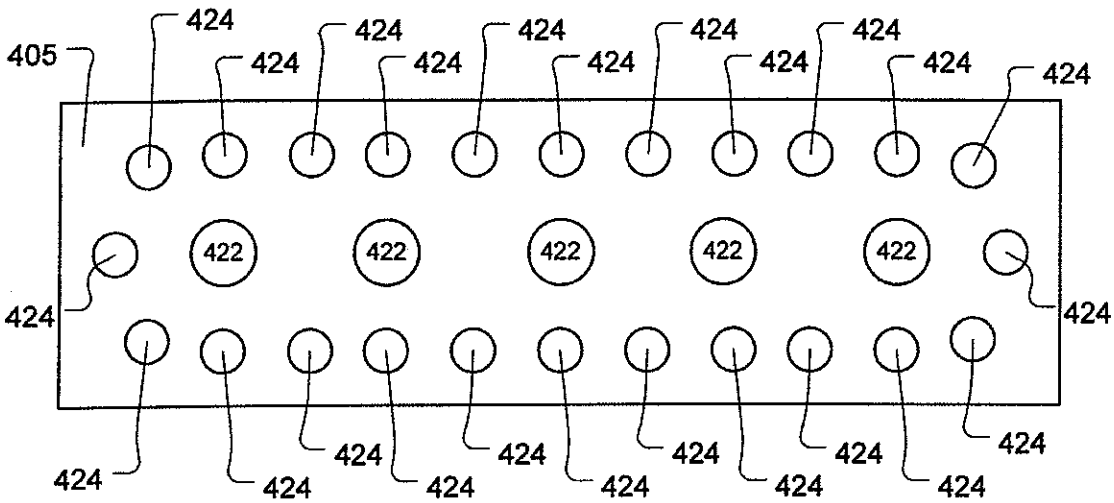

Bottom View

Fig. 4C

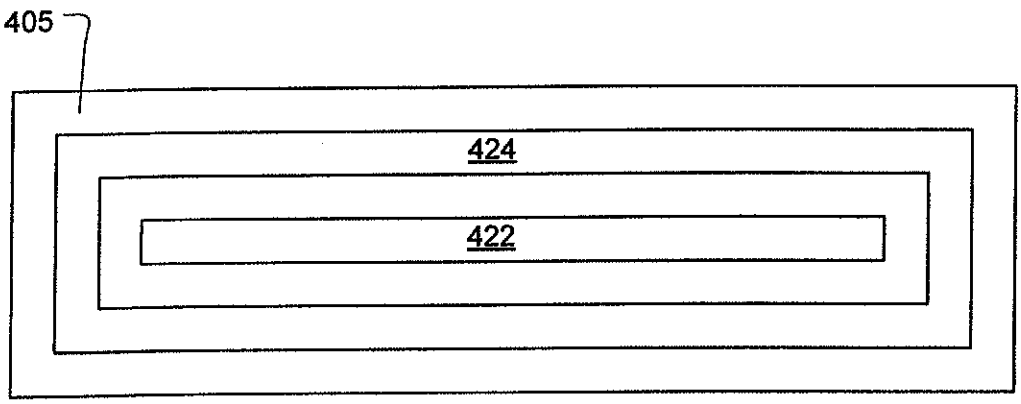

Bottom View

Fig. 4D