TITLE: LOCK DEVICE FOR THE CAR WITH AN AUTOMATIC SHIFT LEVER

BACKGROUND OF THE INVENTION

1. Field of the Invention

The present invention relates to a lock device for the car with an automatic shift lever, which device can lock in an easy way a control link in a knob for the shift lever, such that the shift lever is unable of operating, by this easy way of locking, a theft-proof effect can be achieved.

2. Description of the Prior Art

Theft-proof devices for automobiles in the markets are divided into three kinds, theft-proof bells, steering wheel locks, and shift lever locks, we hereby discuss the principles and disadvantage thereof:

1) a theft-proof bell uses balancing principle to allow the switch of a buzzer to be turned on for scaring a thief; however, if a passenger inadvertently touches the car body, or even when vibrating is effected by a car passing by, the bell will make a loud noise, this can break quiet and peaceful mood of people, yet the theft-proof bell is operated by taking advantage of the battery of the car, so that the car is subjected to electricity leakage when in parking.

2) a steering wheel lock provides a lock head in the middle of a bar, it can be used to lock on the periphery of the steering wheel, length of the bar is longer than the

diameter of the steering wheel, so that rotating of the steering wheel can be limited thereby; or an extendible hooking bar can be used to lock the steering wheel by locking of the lock head with one end of the bar hooking the steering wheel and the other end hooking the pedal of the accelerator and having the length therebetween of the bar been adjusted; however, these are bothersome in use, some drivers hate to use the steering wheel lock with too much time when in parking, while theft of a car often happens in such a short parking time, this is awfully a pi -ty.

3) a shift lever lock provides a lock head at one side of the seat for the shift lever (referring to Fig. 9), with a pivotally connecting hole on the lock head facing to the shift lever and engaed by a U shaped locking hook to lock the shift lever and thus prevent the same from moving. However, when the lock is opened or closed, a driver must turn his body to insert a key into the lock hole with one hand, and to draw away or engage the U shaped locking hook from/with the lock head with another hand, it is quite inconvenient to operate with two hands in a narrow space in a car.

In view of the above stated disadvantage on a conventional theft-proof car lock, the inventor of the present invention has developed a delicate lock structure which renders deviation of a stop piece on a lever lock to stop

a control link, therefore renders a control button to be not able of being pressed down and push rearwardly the control link, and therefore in turn to be not able of moving a shift control rod, so that the automatic shift lever will not be moved, the object of locking can thus be achieved, and with this, disadvantage of inconvenience in operation and uneasy in assembling in the conventional U shaped locking hook and lock head used for locking the shift lever can be eliminated. However, it can be seen from Fig. 9, when a shift control rod 4' is pressed down in a normal shifting action, a limiting rod 41' extending sidewardly on the bottom end thereof will move downwardly to be free from limiting of a guiding groove 51' on a gui-ding plate 5', so that the shift lever 6' can be moved forwardly and backwardly freely, i.e., so long as the limiting rod 41' is free from limiting of the guiding groove 51', the shift lever 6' can be moved; in other words, if a thief is familiar with the way of locking of the invention and the principle of operation of the automatic shift lever, he can then use an iron sheet to insert into the gap between the shift lever 6' and the seat 61' for the shift lever 6', to twist and press the same, as long as it presses the limiting rod 41' to move down the shift control rod 4', the shift lever 6' can be shifted, in this way, the lock structure will be of no use. The way to open it is not so easy for a thief to know, because he

must know well the way of locking as well as the structure of a car, nevertheless, this is surely such an authentic worries that the lock structure for the automatic shift lever of the car has to be redesigned.

SUMMARY OF THE INVENTION

The inventor of the present invention hence provided the lock device for the automatic shift lever of a car of the present invention after continual study and designing based on his practical experience of professional selling and production in automobile theft-proof locks for years, particularly, the present invention resides in a locking measure wherein a push button can not be pressed down due to a lever lock acting with an engaging structure in which a control link and a shift control rod engage with each other, when in locking, the push button is locked, yet prying of the seat for the shift lever by a thief to press the shift control rod directly at one side of the seat can be prevented.

The main object of the present invention is to provide a lock device for the automatic shift lever of a car, wherein beside the characteristic that the push button is locked and can not be pressed down, an engaging as well as limiting structure with the control link of the shift control rod is added, such that the shift control rod can not be moved except it is moved normally by the push button, so that a thief will have no chance to do

theft, thus 100% of theft-proofing effect can be achieved.

The secondary object of the present invention is to provide a lock device for the automatic shift lever of a car, which is a cylindrical lever lock and can be received in a receiving hole provided on the lateral side of the knob fixed directly by screws on the shift lever without necessity of locking by some other lock.

Another object of the present invention is to provide a lock device for the automatic shift lever of a car, which lock device allows a key to insert directly in a locking hole as is an easy procedure both for locking after parking the car and for unlocking.

A further object of the present invention is to provide a lock device for the automatic shift lever of a car, wherein, a wire connecting structure used for high speed gear, so that no worries are there about cutting off and connecting of a conductor when in dismantling or assembling of the knob of the automatic shift lever, this can save a lot of trouble, and the objects of convenience in construction as well as saving of work hour can be achieved.

The present invention will be apparent in the particular structure, characteristics and functions thereof after reading the detailed description of the preferred embodiments thereof in reference to the accompanying dra-

wings.

BRIEF DESCRIPTION OF THE DRAWINGS

Fig. 1 is an analytical perspective view of a basic embodiment of the present invention;

Fig. 1A is a schematic perspective view of partial assembling of the present invention;

Fig. 2 is a view showing the relative positions of the parts of the present invention before locking;

Fig. 3 is a schematic view showing the first situation in the normal operation of shifting in the present invention;

Fig. 4 is a schematic view showing the second situation in the normal operation of shifting in the present invention;

Fig. 5 is a view showing the relative positions of the parts of the present invention when locked;

Fig. 6 is an analytic perspective view of the present invention together with an idle running mechanism;

Fig. 7 is a view showing the relative positions of the parts in the idle running mechanism after assembling;

Fig. 8 is a side view showing the relative positions of the parts in the idle running mechanism after assembling and in the locking state;

Fig. 9 is a perspective view showing shifting mode of an automatic shift lever of a prior art;

Fig. 10 is a perspective view of the appearance of a

protecting sleeve for a limiting rod of the present invention;

Fig. 11 is a front sectional view of the protecting sleeve for the limiting rod and a shift control rod of the present invention;

Fig. 12 is a lateral sectional view of the protecting sleeve for the limiting rod and the shift control rod of the present invention;

Fig. 13 is a view showing the relative position of the protecting sleeve for the limiting rod when in shifting;

Fig. 14 is an analytical perspective view of a scarf joint for the knob of the present invention;

Fig. 15 is a schematic view showing assembling of the scarf joint for the knob of the present invention;

Fig. 15A is a schematic view showing assembling of the scarf joint for the knob of the present invention is being done.

Fig. 16 is a view showing the relative positions of the scarf joint for the knob and the seat for the shift lever;

Fig. 17 is an analytical perspective view of a wire connecting structure of the present invention used for high speed gear;

Fig. 17A is a sectional view showing another embodiment of the wire connecting structure of the present in-

vention used for high speed gear;

Fig. 17B is a sectional view showing one more embodiment of the wire connecting structure of the present invention used for high speed gear;

Fig. 18 is a schematic view showing the mechanism of the present invention for preventing a thief from unscrew -ing a screw;

Fig. 19 is another schematic view showing the mechanism of the present invention for preventing a thief from unscrewing the screw.

DETAILED DESCRIPTION OF THE PREFERRED EMBODIMENT

It can be clearly seen in Fig. 1 to Fig. 4 that the lock device for the automatic shift lever 4 of a car comprises a lever lock 1, a control link 2 and a shift control rod 3 of the shift lever, wherein one end of the lever lock 1 is received in the lateral side of a knob "a" for the shift lever and engages a stop piece 11, the front end of the control link 2 protrudes from the lateral side of the knob "a" and forms a push button 21, the external diameter of the push button 21 is larger than the thickness of the control link 2 itself, thus a protruding portion 211 is formed, when the push button 21 moves the control link 2 backwardly, the shift control rod 3 will be moved downwardly to complete the preparing motion for lever shifting, and when a shifting is completed, the push button 21 can be loosened to restore the

control link 2 and the shift control rod 3 to their original state wherein the shift lever 4 is engaged, at this time, just by rotation of the lever lock 1 and the stop piece 11 to render the stop piece 11 to abutt against the protruding portion 211 at the end of the push button 21 or abutt against the end of the control link 2 (as shown in Fig. 5) to prevent the push button 21 from being pressed down, a locking state can be formed.

Beside the above mentioned principle of operation and objects of inventiveness, the present invention further is provided with a limiting structure which includes a groove 22 and a sliding block 32 being able of creating a mutual movement between the control link 2 and the shift control rod 3, the main feature thereof resides in a bevelling surface 222 and a ladder like fixing member 221 on the groove 22, and on the sliding block 32, there is a bevelling surface 322 corresponding to the bevelling surface 222 and a limiting groove 321 corresponding to the fixing member 221. In an initial state where the control link 2 is not in moving, the sliding block 32 is received in the groove 22 (referring to Fig. 2), while the fixing member 221 is engaged in the limiting groove 321, between the bevelling surfaces 222 and 322 of the sliding block 32 and the groove 22 respectively, there is a gap of even distance throuout of it, at this time, the shift control rod 3 extending down from the bottom of the sliding block

32 is in an engaged and limited state by engaging between the fixing member 221 and the limiting groove 321, and can not be pressed down, while when the push button 21 moves the control link 2 backwardly (referring to Fig. 3), the gap between the bevelling surfaces 222 and 322 of the sliding block 32 and the groove 22 will be eliminated firstly, meantime, the engaging state between the fixing member 221 and the limiting groove 321 will be relieved, in this way, when the control link 2 goes on to move back (referring to Fig. 4), the groove 22 will move the sliding block 32 down to complete the preparing motion for lever shifting, and when a shifting is completed, the con -trol link 2 and the shift control rod 3 will be recalled to their original state wherein they engage with each other, then by rotation of the lever lock 1 as stated abo -ve, the shift lever can be locked again.

We can know from the above statement that the control link 2 and the shift control rod 3 have no way to get rid of engagement therebetween and relieve the shift lever be -side pressing of the push button 21, therefore, if the push button 21 is prevent from pressing down by the lever lock 1 and the stop piece 11 (such as shown in Fig. 5), the aim of locking the sift lever can be achieved, and prying for moving the shift control rod 3 downwardly by a thief on one side of the seat for the shift lever with an iron piece or some other tools can be prevented.

Further, a mechanism for preventing rotation and destruction can be provided in the present invention, such as shown in Fig. 6, the mechanism is comprised of a sleeve 33 and an axle 34 between the top end of the shift con-trol rod 3 and the sliding block 32, wherein the axle 34 is inserted in an enlarged hole 331 of the sleeve 33 (referring to Fig. 7), the shift control rod 3 therebeneath is inserted in the central hole 332 of the sleeve 33, while the sliding block 32 is threadedly jointed to the top end of the enlarged hole 331 in the sleeve 33, by means of the sleeve 33 and the axle 34, the shift control rod 3 and the sliding block 32 form idle running members, when the shift control rod 3 rotates to rotate the axle 34 in the sleeve 33, the sliding block 32 is not influenced thereby, and when the sliding block 32 rotates to rotate the sleeve 33, the shift control rod 3 is not influenced thereby either, i.e., any of the sliding block 32 and the shift control rod 3 is rotated by an external force, its rotation is an idle running, so that it will fail if a thief try to turn the shift control rod 3 for destroying, a theft-proof effect can thus be certainly achieved.

We can know from the above statement that the control link 2 and the shift control rod 3 have truely no way to get rid of engagement therebetween and relieve the shift lever beside pressing of the push button 21, and as

stated above therefore, the push button 21 is prevent from pressing down by the lever lock 1 and the stop piece 11 (such as shown in Fig. 8), the aim of locking the sift lever can be achieved, and prying for moving the shift control rod 3 downwardly by a thief on one side of the seat for the shift lever with an iron piece or some other tools can be prevented.

An embodiment of a protecting hood for the limiting rod of the automatic shift lever of the present invention is clearly shown in Fig. 10 to 13, the protecting hood includes a fixing portion B01, a defending portion B02 and a sliding groove B03, wherein the fixing portion B01 is located above the defending portion B02 and the sliding groove B03, while the defending portion B02 and the sliding groove B03 cross each other orthogonally. The relative positions of the protecting hood and the base portion of the automatic shift lever are as follows, the fixing portion B01 is fixedly provided at the bottom of the shift control rod 3, while the defending portion B02 and the sliding groove B03 cover respectively a limiting rod B05 and a guiding plate B06. Due to the relationship of position between the limiting rod B05 and the guiding plate B06, the limiting rod B05 extends through a guiding slot B07 provided in the middle of the guiding plate B06, whereby, when the shift control rod 3 is to move, the limiting rod B05 must be moved down firstly to get rid of

limitation of the guiding slot B07, thereby, the bottom of the defending portion B02 and the sliding groove B03 is opened and an open end B08 is formed to allow down pressing of the limiting rod B05 and displacement of the shift control rod 3.

The relationship of position between the protecting hood for the limiting rod B05 and the shift control rod 3 , as well as between the limiting rod B05 and the guiding plate B06 mentioned above, and the space combination of them, have a main object to prevent from prying of the shift lever by a thief, without interfering normal operation of the shift control rod 3. As stated in the preceding paragraph, when the shift control rod 3 is to move, the limiting rod B05 must be moved down firstly, if there is a lock to lock up the limiting rod B05 (not shown) to prevent the same from downward displacement, the shift control rod 3 will be in turn locked to achieve a goal of theft-proofing. However, when a thief prys directly with an iron piece at one side of the seat for the shift control rod 3 to press directly the limiting rod B05 and to move the same down, locking function of the lock to the limiting rod B05 as mentioned above will not work. Such case can be prevented by the protecting hood for the limiting rod of the present invention, a prying force like what has been stated can only touch the external surfaces of the defending portion B02 or the sliding groove B03

rather than the limiting rod B05, an excellent theft-proof effect can thus be achieved as another object of the present invention.

Fig. 14 clearly shows an embodiment of a scarf joint for the knob "a" of the automatic shift lever of the present invention, the joint is provided between the shift control rod 3 and the knob "a" to connect the two members in a simple way, without the trouble that they can be con-nected only when the knob "a" being removed is aligned with the original fixing member, an object of easy deta-ching, maintenance as well as changing of the knob "a" can thus be achieved.

The scarf joint of the present invention comprises mainly of an upper and a lower bodies a03, a04 and a tigh-tening device a05; wherein the upper body a03 is in a shape of a cylinder, the outer periphery thereof can be exactly inserted in the inner periphery at the bottom of the knob "a", the upper body a03 is provided with a screw hole a31 for screwing in of an inherent screw a21 of the knob "a", so that the knob "a" can be easily fitted over the upper body a03 to connect with the scarf joint of the present invention. The lower body a04 is provided at the bottom end of the upper body a03, the inner periphery thereof being larger than the maximum diameter of the shift control rod 3, and is a hollow pipe body capable of fitting over the top end of the shift control rod 3, an

open groove a41 is provided on one side of the lower body a04, so that the inner diameter of the lower body a04 can be enlarged or reduced by lateral opening or closing of the open groove a41. The tightening device a05 is composed of two flanges a51 parallel with each other, the flan -ges a51 are provided respectively on both sides of the open groove a41, a plurality of fixing holes a52 are transversly provided along the flanges a51 for piercing of a plurality of truncated screws a53 through the flanges a51, a plurality of nuts a531 are provided for adjusting the distance between the two flanges a51 (such as shown in Fig. 15 & Fig. 15A), after the truncated screws a53 are screwed in, they are truncated to leave smooth end surfaces and are not to be screwed off any more. The two flanges a51 will get closer when the gap of the open groove a41 is reduced, the inner diameter of the lower body a04 thus is reduced; when the lower body a04 is fitted over the shift control rod 3, reducing of the inner diameter thereof renders it to snugly clamp the shift con -trol rod 3.

One thing worth of mentioning, the knob "a" of the shift control rod 3 has a substantial length (such as shown in Fig. 16), the bottom end thereof is close to the top of the seat a06 for the shift lever, while the shift control rod 3 is partially emerged in or partially exposed from the seat a06 for the shift lever, thereby, after

mounting of the scarf joint a0A of the present invention, the shift control rod 3 is totally hidden, the shift control rod 3 in operation will be moved along an arc line, and when it is pushed to the foremost parking gear, it is at the lowest position of the arc line, so that the bottom of the scarf joint a0A can be hidden in the seat a06 for the shift lever, at least one of the above mentioned truncated screws a53 in the fixing holes a52 will be hidden in the seat a06 for the shift lever to prevent the knob "a" from destruction by a thief.

The scarf joint of the present invention can suit various brand of cars because of the open groove a41 it pro-vides, a theft-proof pipe "c" is added and extends from the lower body a04 to the top of the fixing portion B01 and is outside of the shift control rod 3 to prevent from destruction by a thief. The theft-proof pipe "c" is composed of an upper protecting rod a07 and a lower protecting rod a07' (Fig. 1), wherein:

The upper protecting rod a07 is put on the upper portion of the shift control rod 3 and has a fixed portion a071 on the top thereof, also has a slide slot a072 on the bottom thereof. Wherein the fixed portion a071 can be secured on the external surface of the shift control rod 3 by an internal hexagonal screw a073 extending through a screw hole on the fixed portion a071, or it can be extended upwardly to form a locating rod a074 for connecting

to the lower body a04 of the scarf joint. Moreover, for the convenience of maintenance and for preventing people from dismantling the internal hexagonal screw a073, a through hole a08 can be provided at the location on the knob "a" corresponding to the position of the fixed portion a071, and then put a plug a09 (Fig. 1A) having a slight concaved portion in it to render the surface thereof to be flush with the surface of the knob "a", this is convenient for maintenance on one hand, and prevents the plug a09 from being pried on the other hand.

The above mentioned lower protecting rod a07' encircles the external periphery of the lower portion of the shift control rod 3, while the top thereof is inserted into the upper protecting rod a07 and is secured thereto, the bottom thereof is abutted against the top of the fixing portion B01 of the protecting hood for the limiting rod. Providing of the lower protecting rod a07' is for adjustment of the total length of itself together with the upper protecting rod a07, and for abutment thereof against the top of the protecting hood for the limiting rod to prevent the latter from moving upwardly. For this purpose, a bolt a071' is provided on the lateral side thereof corresponding in position to the slide slot a072 of the upper protecting rod a07, when in adjusting length of the theft-proof pipe "c", the lower protecting rod a07' can be moved beneath and in the upper protecting rod

a07, so that the bolt a071' can have relative movement to the slide slot a072, after adjustment of length of the upper protecting rod a07 and the lower protecting rod a07', the bolt a071' and the slide slot a072 are secured to fix the upper and the lower protecting rods a07, a07', by all means, the principle for adjustment of length is that the bottom of the lower protecting rod a07' must be abutted against the top of the protecting hood for the limiting rod.

By means of the above stated structure, after adjustment of length of the upper protecting rod a07 and the lower protecting rod a07', the upper protecting rod a07 is secured on the shift control rod 3, the knob "a" or the lower bodie a04, while the top of the lower protecting rod a07' is fixed together with the upper protecting rod a07, the bottom thereof is abutted against the top of the protecting hood for the limiting rod. Thereby, when the protecting hood for the limiting rod is subjected to an upward exertion force through the upper and the lower protecting rods a07, a07', it will not displace, this can therefore enhance protecting function of the protecting hood for the limiting rod.

Fig. 17 shows a wire connecting structure "D" used for high speed gear in order that no worries will be induced about cutting off and connecting of a conductor when in dismantling or assembling of the knob of the au-

tomatic shift lever, the wire connecting structure "D" used for high speed gear is provided at the location where the bottom of the lower bodie a04 of the scarf joint of the automatic shift lever and the top of the upper protecting rod a07 of the theft-proof pipe "c" are, a fixing groove D1 is provided on each of the lower bodie a04 and the upper protecting rod a07 for securing respectively an upper and a lower connectors D2, D3 which are provided respectively with contact pins D21, D31 which can be mutually connected for electric conduction, the upper contact pins D21 as shown in the drawing are insertion pins, while the lower contact pins D31 are receiving pins having on the tops thereof receiving heads D311 and on the shafts thereof elastic elements D312 and further on the bottom ends thereof gaskets D313, the receiving pins are received in the connecting holes D314 of the lower connector D3. When the upper contact pins D21 are inserted into the connecting holes D314 of the lower connector D3, they can be connected with the receiving heads 311 of the lower contact pins D31 to compress the elastic elements D312, while the gaskets D313 will hold the elastic elements D312 against droping. With the above stated structure, the original conductor in the high speed gear of a car will be divided here into upper and lower conductors D5 and D6, the ends of the upper conductors D5 connect to the upper contact pins D21, while the

tops of the lower conductors D6 connect to the lower contact pins D31. Therefore, when the upper and a lower connectors D2, D3 contact with each other, the upper and the lowe conductors D5 and D6 will complete conduction; more -over, the upper and the lower connectors D2, D3 can also combined with the upper contact pins D21 and female pins D32 (Fig. 17A), alternatively, the female pins D32 or the lower contact pins D31 can be substituted by the elastic strips D33 shown in Fig. 17B.

Fig. 18 and Fig. 19 show the mechanism for preventing a thief from unscrewing a screw S connceting together the shift lever and the knob "a". Wherein, two metallic strips are fixedly attached on the shift lever and stand bilaterally thereon, the mutually facing sides of the metallic strips are provided respectively with a groo -ve, the grooves receive an inner stop piece S91 and an external stop piece S92 as guiding grooves therefor; when a key locks the control link 2, the inner stop piece S91 can not move upwardly or downwardly, so that a hole S93 on the external stop piece S92 is blocked, the screw S is covered by the inner stop piece S91, a thief thus can not do theft in this case; when the screw S is to be unscrewed (such as for taking out the inner and the external stop pieces S91, S92 for maintaining the inner parts inside the control link 2), it only needs to turn the key to allow the control link 2 to displace freely, and press

the control link 2 to render the protruding end S94 of the inner stop piece S91 to get into a groove S95 in the control link 2, hence the inner stop piece S91 is moved upwardly, the hole S93 on the external stop piece S92 thus is unlocked to reveal the screw S for maintaining.

My invention may assume numerous forms and is to be construed as including all modifications and variations falling within the scope of the appended claims.



CLAIMS

1. A lock device for the automatic shift lever of a car including a locking mechanism, a protecting hood for a limiting rod, a mechanism for preventing a thief from unscrewing a screw, a scarf joint for a knob for the shift lever, a wire connecting structure used for high speed gear and a theft-proof pipe, wherein said locking mechanism is comprised of:

a control link provided in said knob on the top of said automatic shift lever, the front end of said control link protruding from the lateral side of said knob and forming a push button, the external diameter of said push button being larger than the thickness of said control link itself, thus forming a protruding portion, a groove being formed in said control link, a first bevelling surface being formed in said groove;

a shift control rod provided on said automatic shift lever, a sliding block provided on the top end thereof being received in said groove, and another bevelling surface corresponding to said first bevelling surface being provided on said sliding block and inclined in the same angle as that of said first bevelling surface, when said control link moving backwardly by operation of said push button, said bevelling surfaces on said groove and said sliding block moving said shift control rod down to establish a shiftable state; and

a lever lock received in the rear end of said knob for said shift lever, and having a stop piece to rotate and abutt against said protruding portion at the end of said push button or the end of said control link when the lock core of said lever lock rotates to prevent said push button from being pressed down, a locking state thus being formed.

2. A lock device for the automatic shift lever of a car as stated in claim 1, wherein said groove has a fixing member on one side thereof opposite to said first bevelling surface, said sliding block has a limiting groove corresponding to said fixing member, and before operation of said control link, said fixing member and said limiting groove are engaged with each other, while backward movement of said control link will render said fixing member to be released from said limiting groove, and then moves down said control link by means of said bevelling surfaces.

3. A lock device for the automatic shift lever of a car as stated in claim 1, wherein, at the bottom of said sliding block is a hollow sleeve with a central hole provided in the lower part thereof; and an axle is provided on the top of said shift control rod, said axle inserts in said central hole and having its upper portion enlarged and being received in said sleeve.

4. A lock device for the automatic shift lever of a

car as stated in claim 1, wherein said sliding block of said shift control rod is directly provided on said shift control rod and is secured by screws.

5. A lock device for the automatic shift lever of a car as stated in claim 1, wherein said sliding block of said shift control rod is directly provided on said shift control rod and is secured by threads provided thereon.

6. A lock device for the automatic shift lever of a car as stated in claim 1, wherein said protecting hood for a limiting rod is comprised of:

a fixing portion fixedly provided at the bottom of said shift control rod;

a sliding groove fixedly provided beneath said fixing portion and hooding over a guiding plate, an open end being provided at one side of said sliding groove to render said sliding groove to move forwardly and backwardly with said fixing portion relative to said guiding plate; and

a defending portion also provided beneath said fixing portion and above said limiting rod and crossing said sliding groove, the bottom of said defending portion being opened to allow down pressing of said limiting rod to make a gear shifting;

by the above structure, when said limiting rod is limited by a lock from down pressing to form a locking state, downward prying force can not touch said limiting

rod by impediment of said defending portion and said sliding groove.

7. A lock device for the automatic shift lever of a car as stated in claim 1, wherein said scarf joint for said knob is comprised of:

an upper body fitted in the inner periphery of the bottom end of said knob and being provided with a screw hole for screwing in of a screw for fixed connection;

a lower body provided at the bottom end of said upper body and fitting over the top end of said shift control rod, an open groove being provided on one side of said lower body, so that the inner diameter of said lower body being enlarged or reduced by lateral opening or closing of said open groove; and

a tightening device composed of two flanges parallel with each other, said flanges being provided respecti-vely on both sides of said open groove, a plurality of fixing holes being transversly provided along said flanges for piercing of a plurality of truncated screws throu-gh said flanges, a plurality of nuts being provided for adjusting the distance between said flanges;

by the above structure, said two flanges will get closer when the gap of said open groove is reduced, the inner diameter of said lower body thus is reduced, reducing of the inner diameter thereof renders said lower body to snugly clamp said shift control rod, while said

knob is fixed by fitting of said upper body therein, in this way, said knob and said shift lever can be fixedly connected to each other, said knob thus can be easily detached for maintenance or changing.

8. A lock device for the automatic shift lever of a car as stated in claim 1, wherein said theft-proof pipe is comprised of:

an upper protecting rod put on the upper portion of said shift control rod and having a fixed portion on the top thereof, also having a slide slot on the bottom thereof; and

a lower protecting rod encircling the external periphery of the lower portion of said shift control rod, the top thereof being inserted into said upper protecting rod and being able of moving ralative to said upper protecting rod, a bolt being provided to extend inwardly into said slide slot, after adjustment of length of said upper protecting rod and said lower protecting rod, said bolt and said slide slot being secured to fix the length of said upper and lower protecting rods, the bottom of said lower protecting rod being abutted against the top of said protecting hood for said limiting rod;

By means of the above stated structure, when said protecting hood for said limiting rod is subjected to an inadvisable upward prying force, it will protect said protecting hood not to move upwardly, theft-proof func-

tion thereby is enhanced, such structure capable of adjusting length suits for various sizes of shift lever.

9. A lock device for the automatic shift lever of a car as stated in claim 7, wherein said wire connecting structure used for high speed gear is provided at the location where the bottom of said lower bodie of said scarf joint of said automatic shift lever and the top of said upper protecting rod of said theft-proof pipe are, a fixing groove is provided on each of said lower bodie and upper protecting rod for securing respectively an upper and a lower connectors which are provided respectively with upper and lower contact pins which can be mutually connected to for electric conduction, said upper contact pins are insertion pins, while said lower contact pins are receiving pins having on the tops thereof receiving heads and on the shafts thereof elastic elements and further on the bottom ends thereof gaskets, when said upper contact pins are inserted into said connecting holes of said lower connector, they can be connected with said receiving heads of said lower contact pins, hance when said knob is aligned with said shift lever for assembling, the conductors connected respectively to said lower bodie and said upper protecting rod can be communicated with each other by means of said upper contact pins and said lower contact pins, objects of convenient use, saving of work hour thus can be achieved.

10. A lock device for the automatic shift lever of a car as stated in claim 1, wherein said mechanism for preventing a thief from unscrewing a screw is comprised of:

an external stop piece having a hole,

an inner stop piece covers a screw, and

a groove provided in said control link;

when a protruding end of said inner stop piece gets into a groove in said control link, said hole on said external stop piece will be unlocked to reveal said screw for dismantling and maintaining.

11. A lock device for the automatic shift lever of a car as stated in claim 8, wherein said knob for said shift lever is provided with a through hole at the location on said knob corresponding to the position of said fixed portion, and a plug having a slight concaved portion in it is put in said hole and is detachable to expose said fixed portion inside said hole.

12. A lock device for the automatic shift lever of a car as stated in claim 9, wherein said upper contact pins and said lower contact pins can be substituted by a combination of said upper contact pins and a plurality of female pins.

13. A lock device for the automatic shift lever of a car as stated in claim 9, wherein said lower contact pins can be substituted by a plurality of elastic strips.

LOCK DEVICE FOR THE CAR WITH AN AUTOMATIC SHIFT LEVER

ABSTRACT OF THE DISCLOSURE

A simple and easy operated locking device for an automatic shift lever in a car, with such device, further lock outside the automatic shift lever can be saved, wherein a receiving hole is provided on the lateral side of a knob for the shift lever to receive a lever lock, a stop piece provided on one end of the lever lock can be used to lock a push button to prevent the shift lever from shifting, yet prying at the seat for the shift lever by a thief to press the shift control rod directly at one side of the seat can be prevented, an excellent theft-proof effect can thus be achieved.

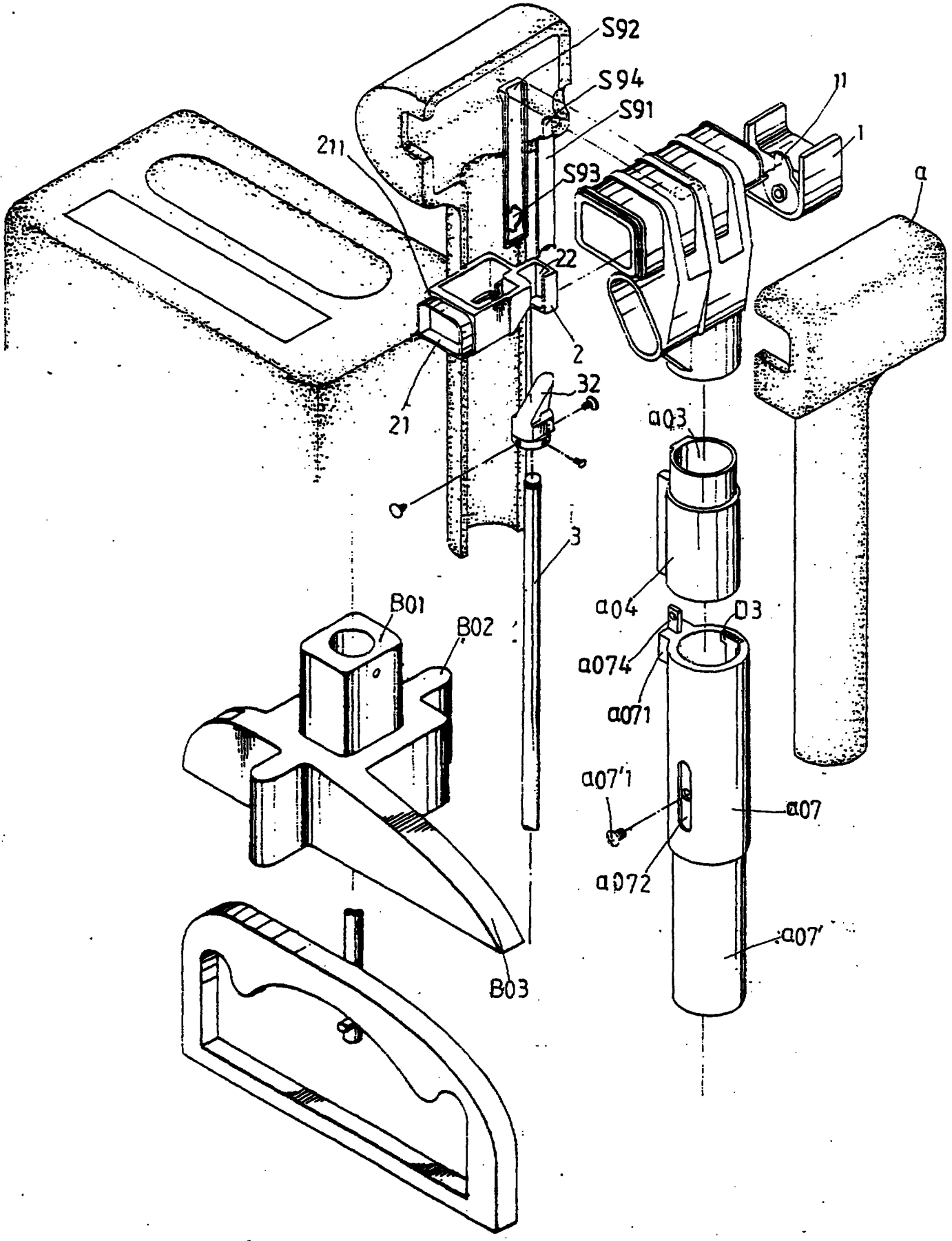
S92
S94
S91
S93
11
1
a
211
22
2
21
32
a03
3
a04
D3
a074
a071
B01
B02
a07'1
a07
a072
a07'
B03

Fig 1

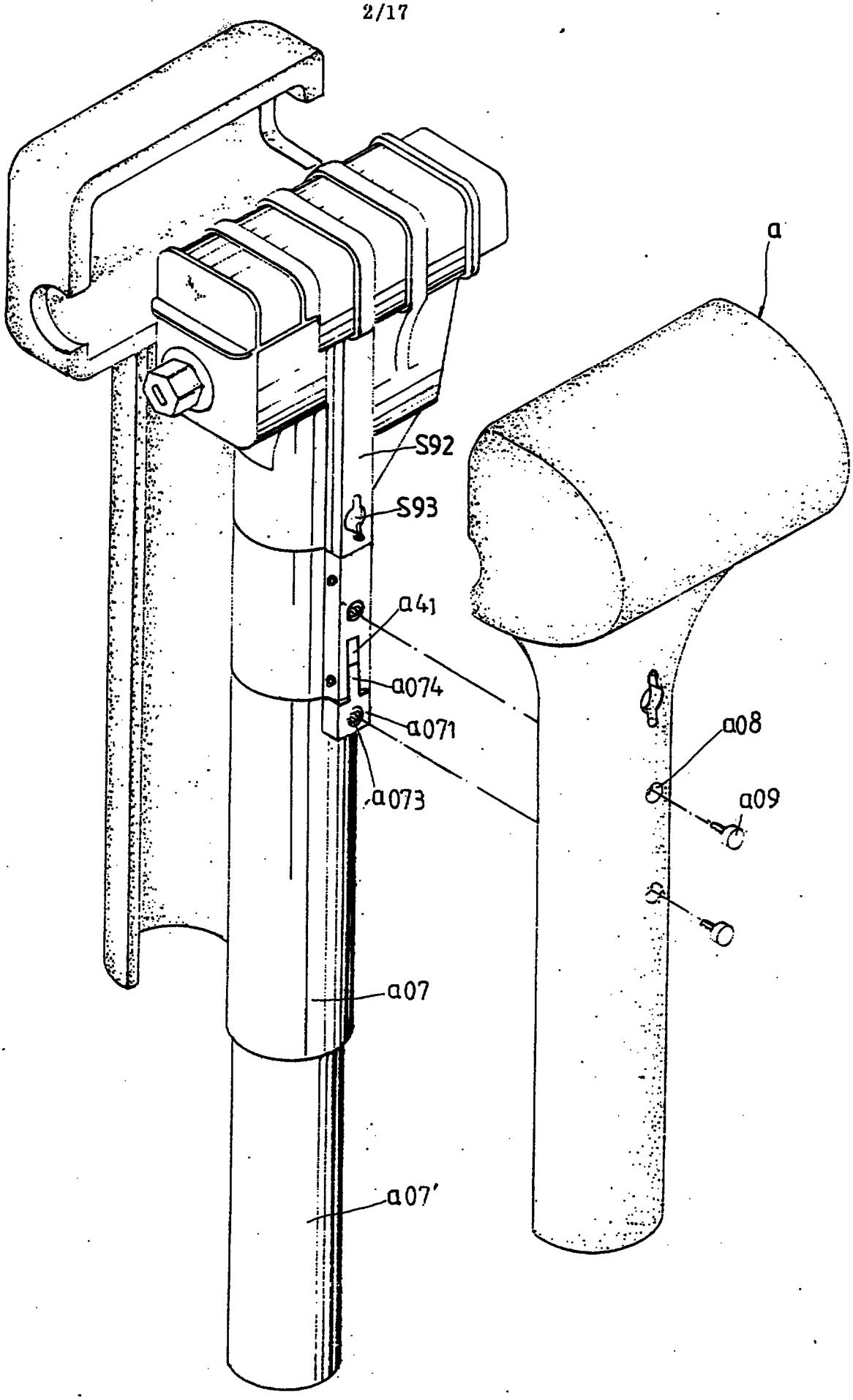

Fig 1A

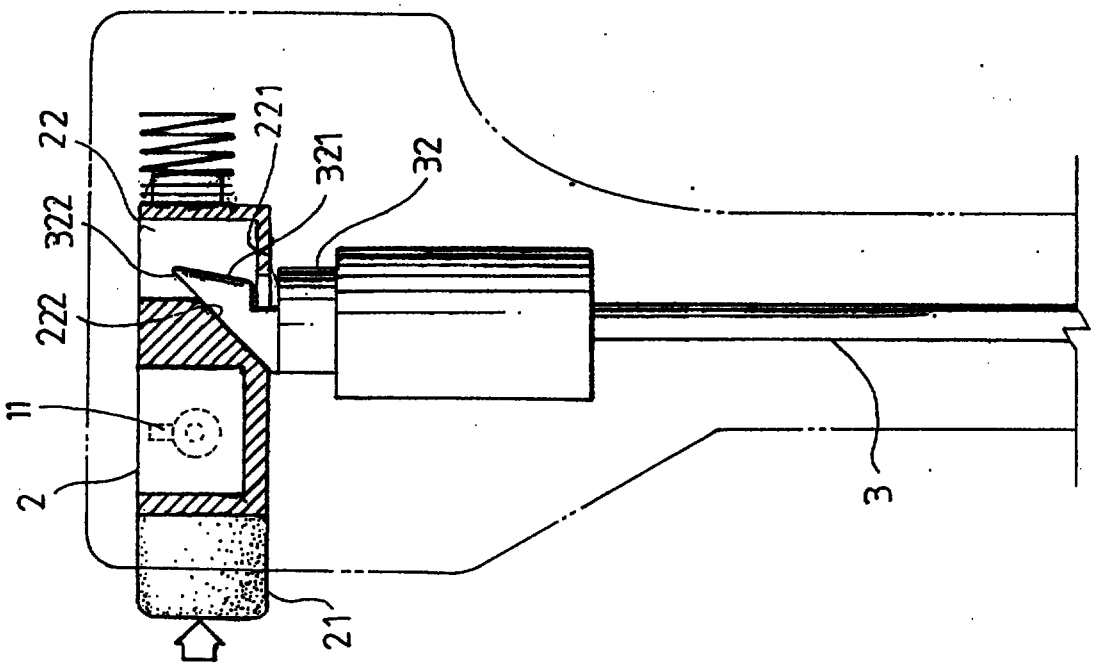

Fig. 3

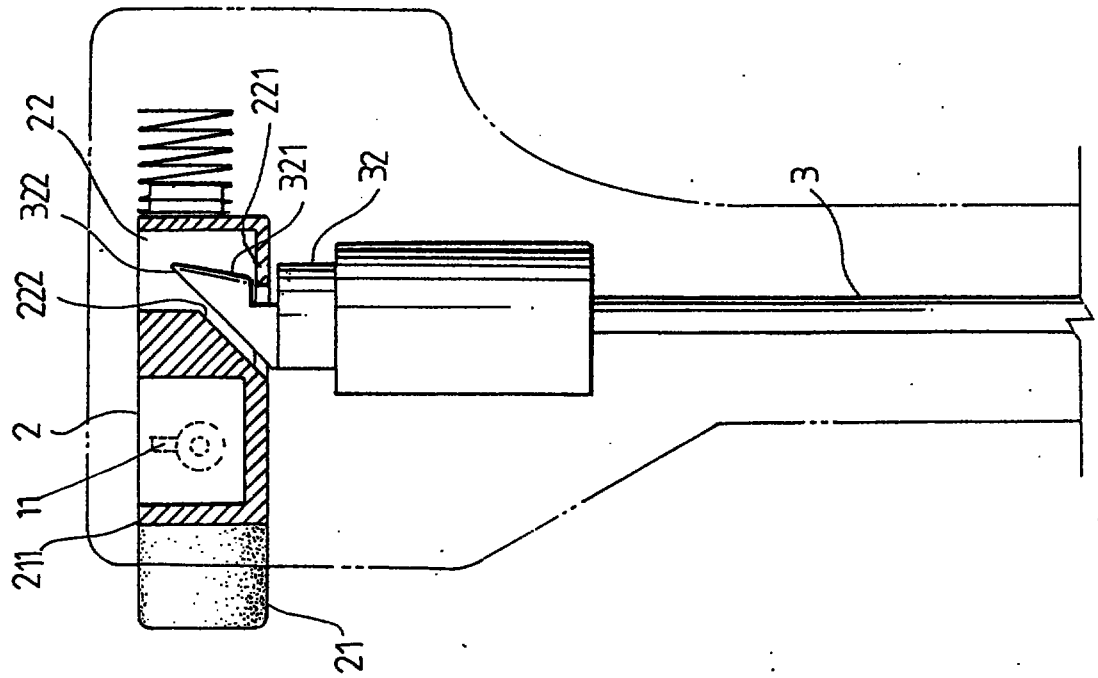

Fig. 2

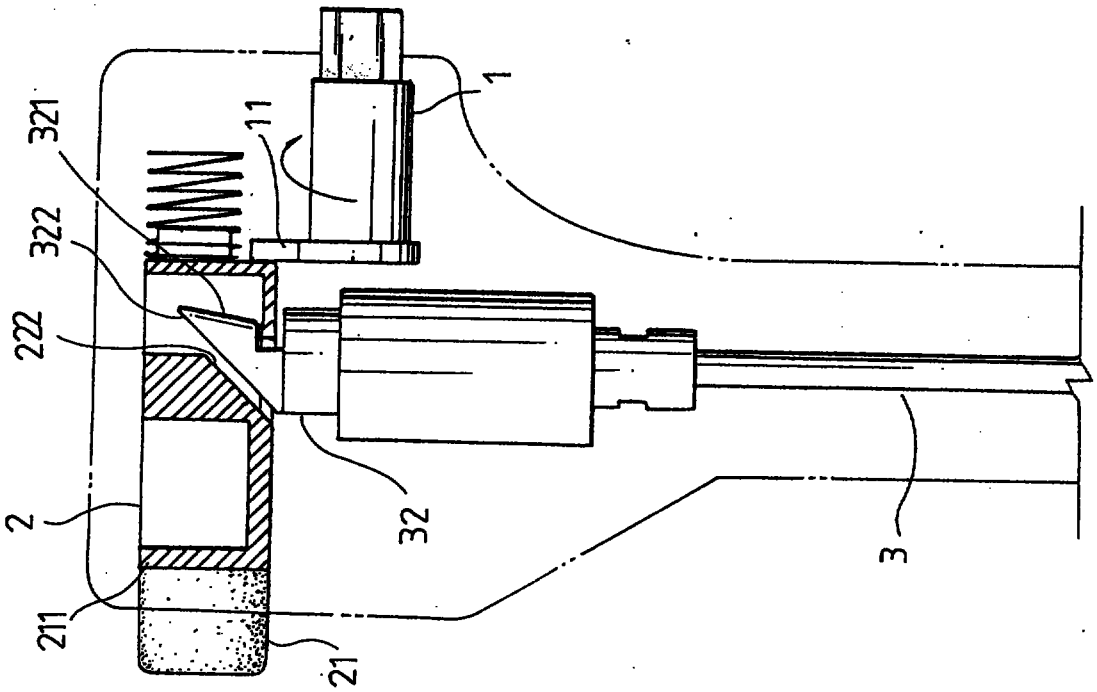

Fig. 5

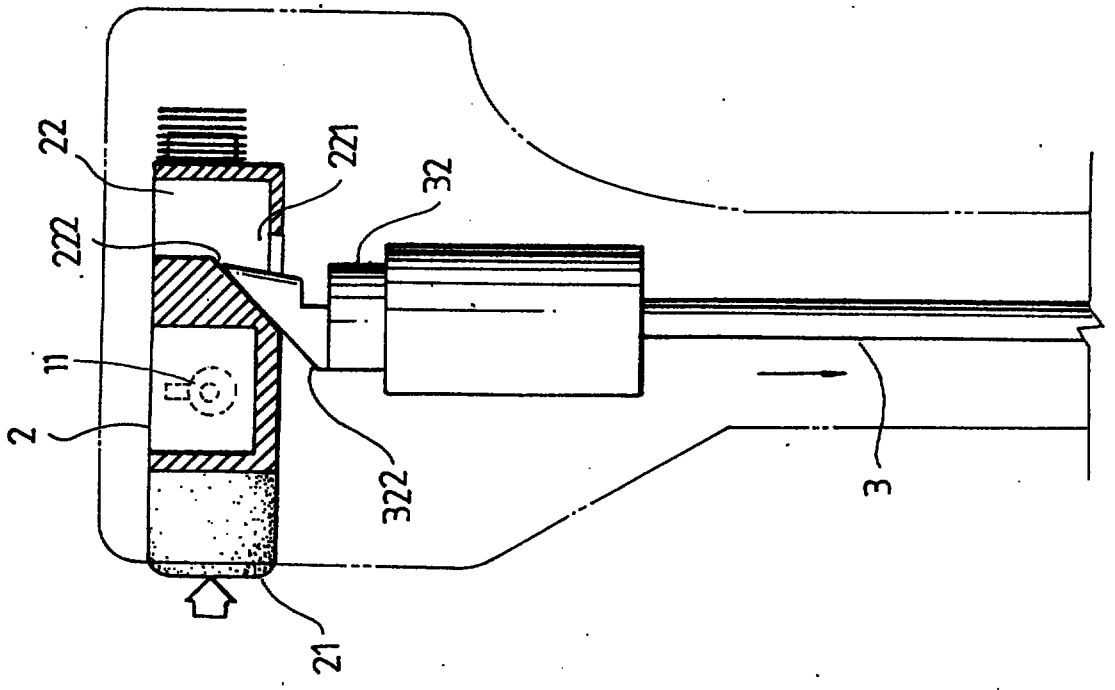

Fig. 4

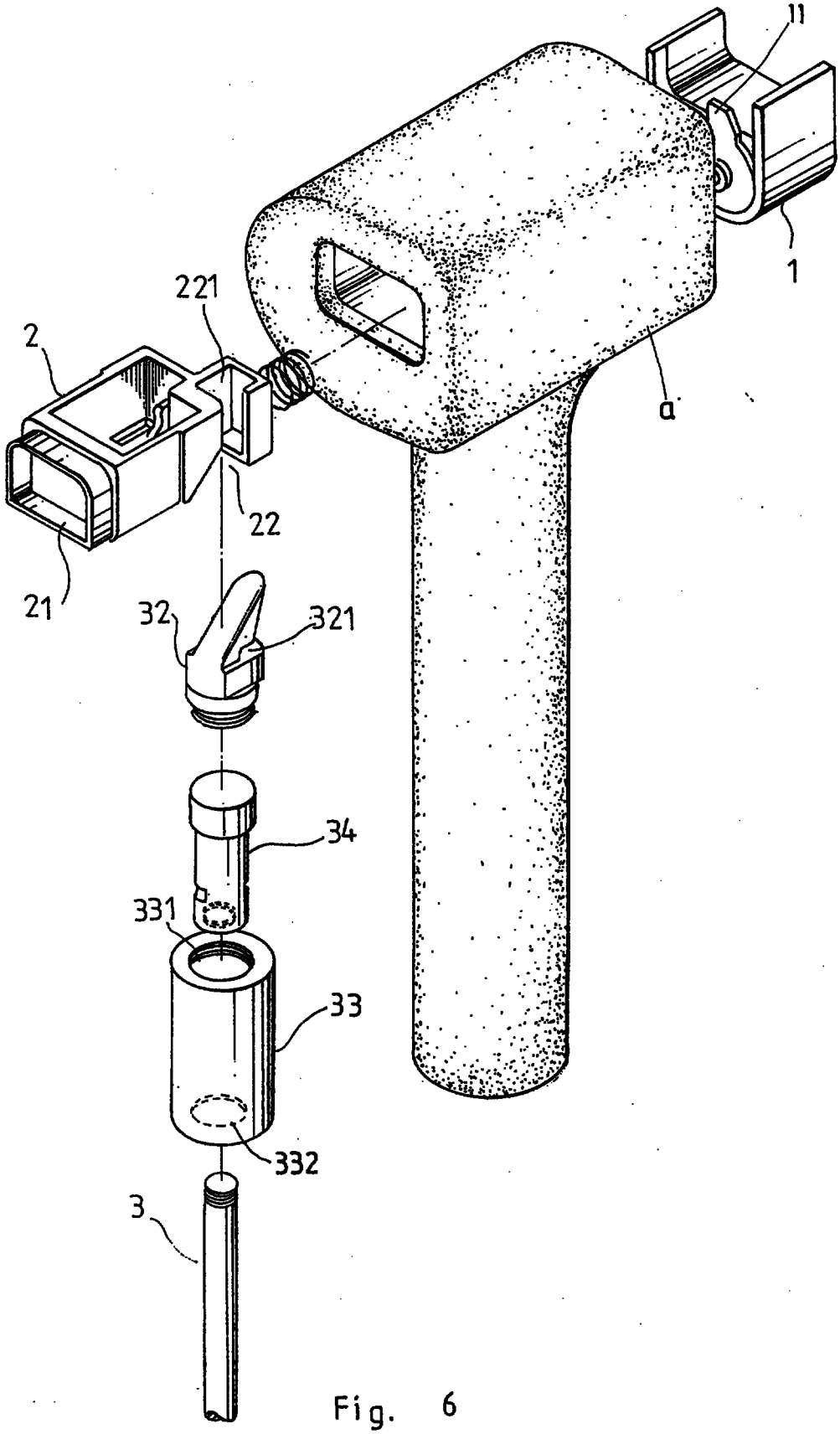

Fig. 6

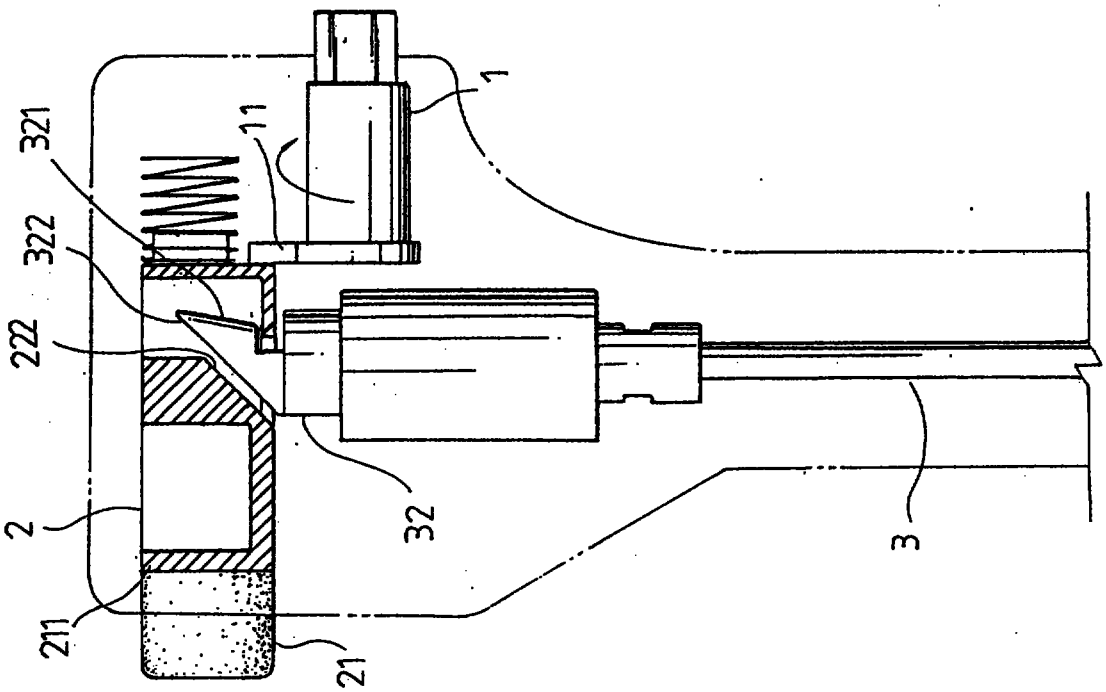
1
11
321
322
222
2
211
21
32
3

Fig. 8

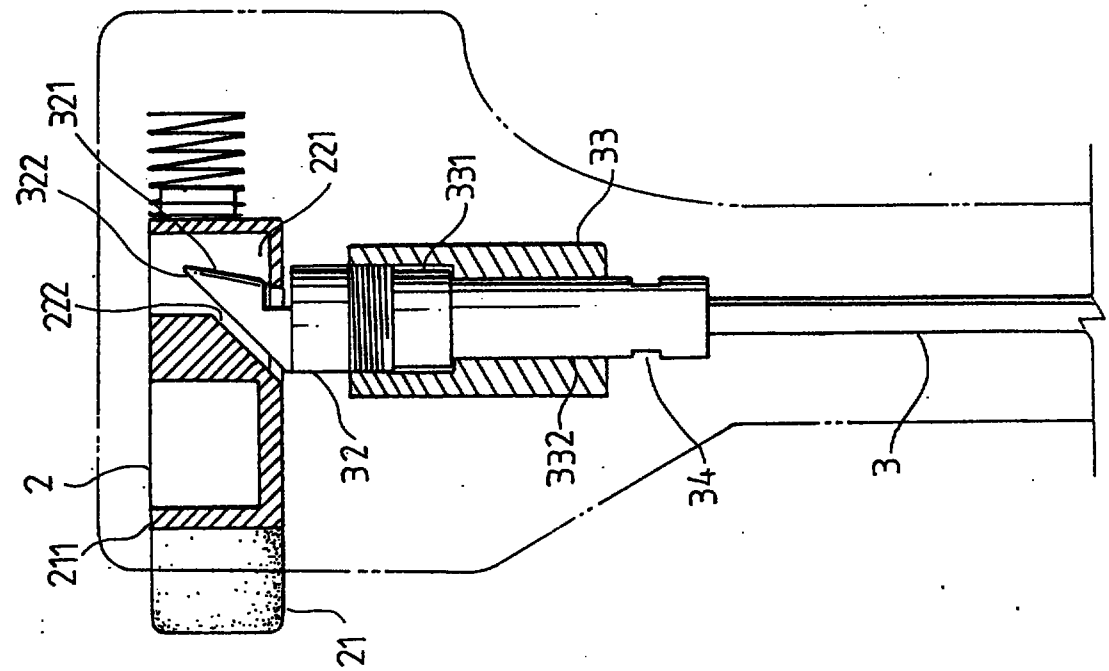
321
322
222
2
211
21
221
331
33
32
332
34
3

Fig. 7

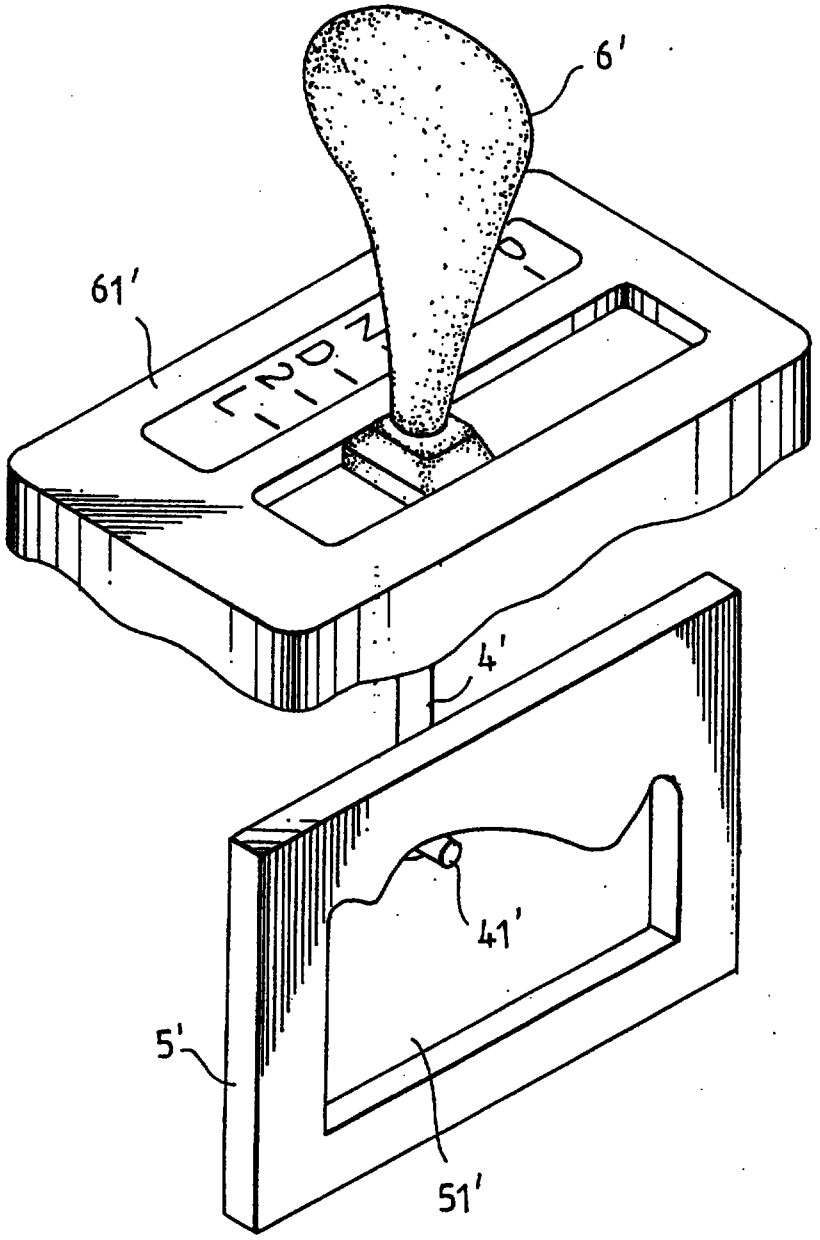

Fig. 9
PRIOR ART

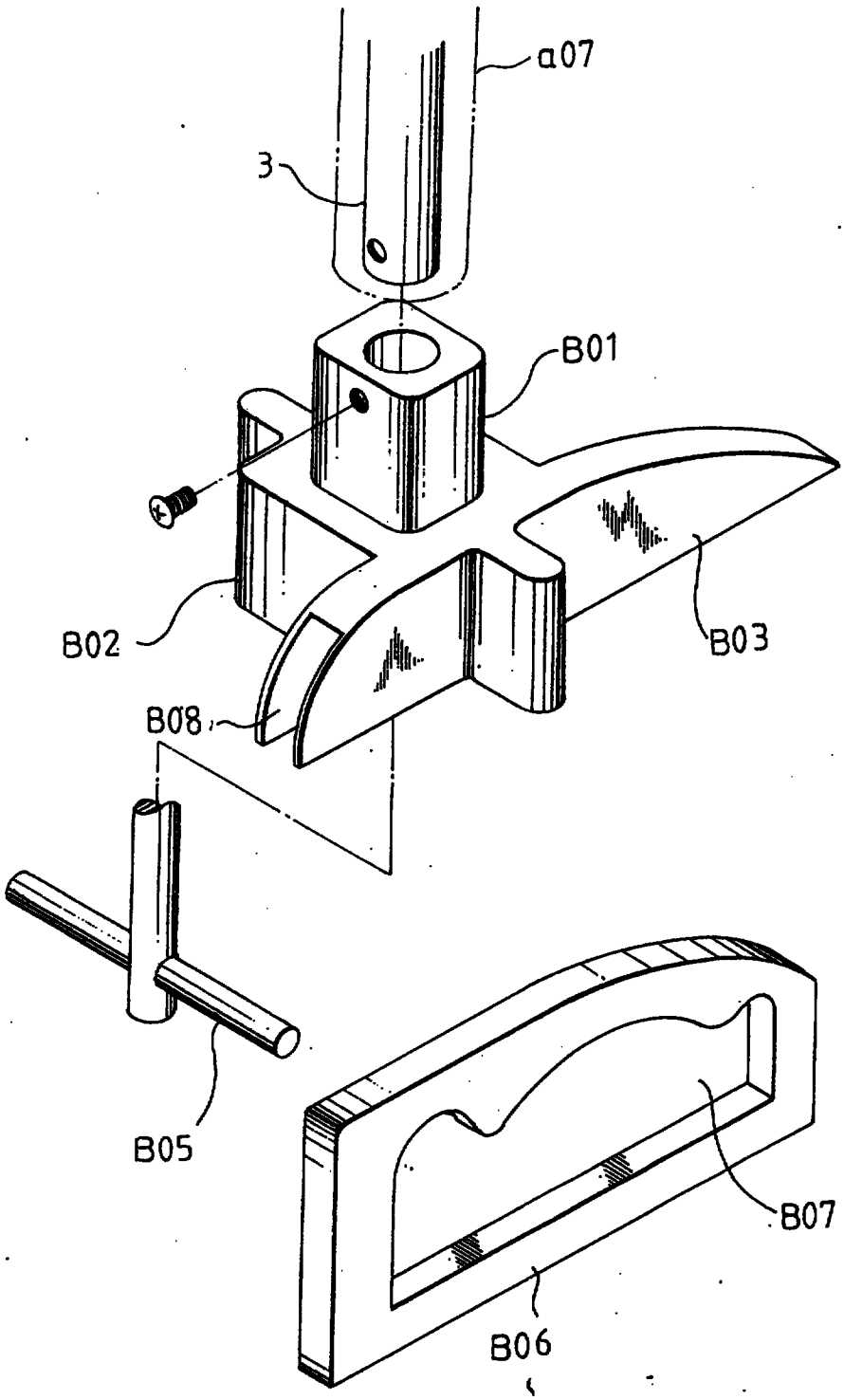

Fig. 10

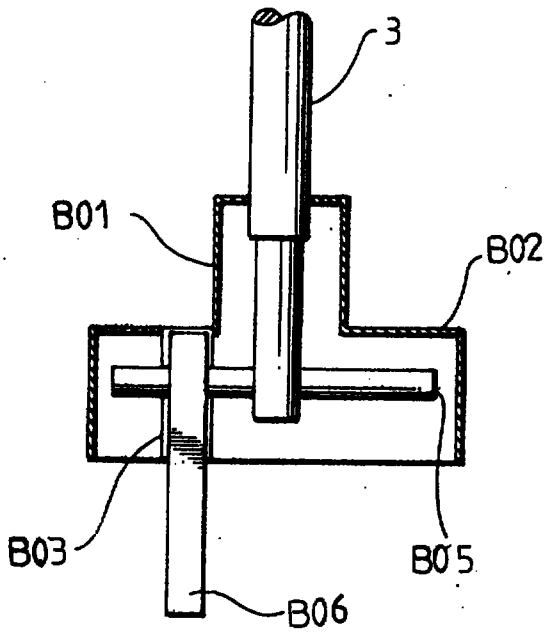

Fig. 11

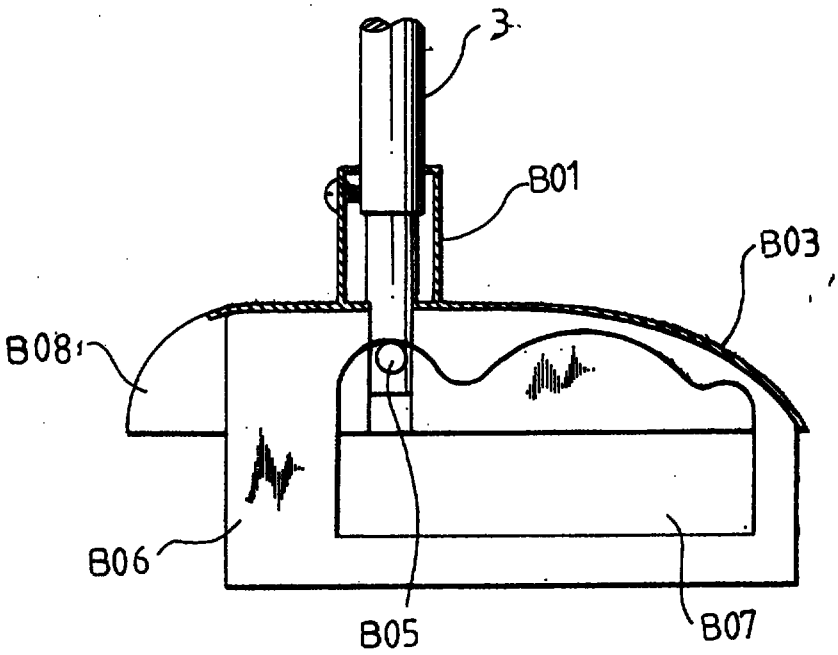

Fig. 12

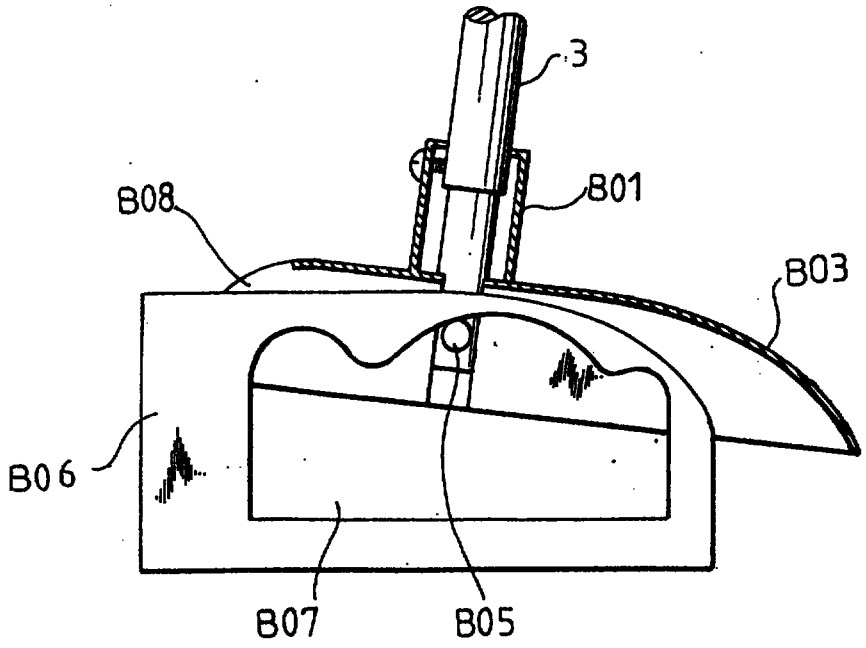

Fig. 13

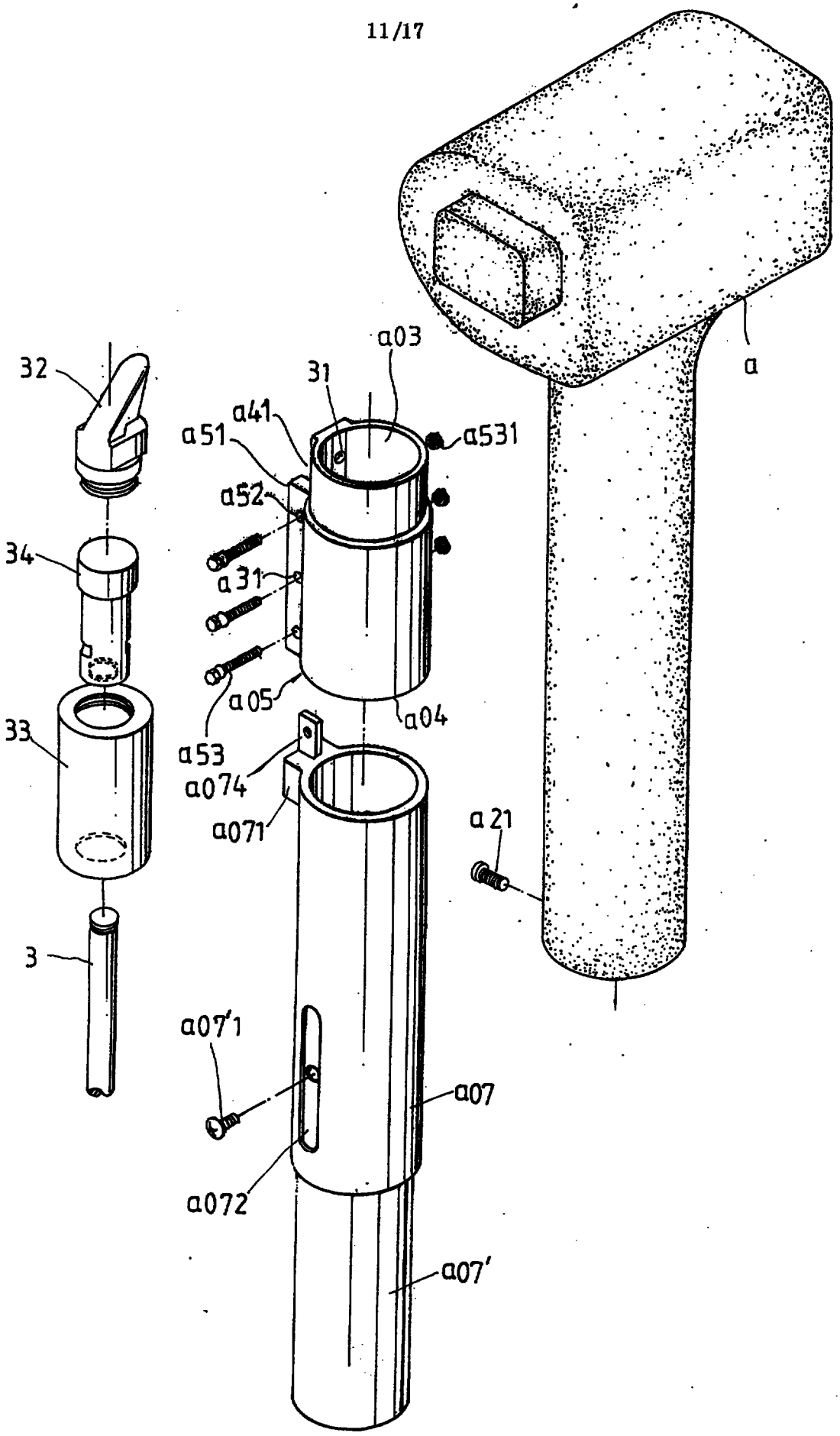
32
34
33
3
a03
31
a41
a51
a531
a52
a31
a05
a04
a53
a074
a071
a21
a
a07'1
a07
a072
a07'

Fig 14

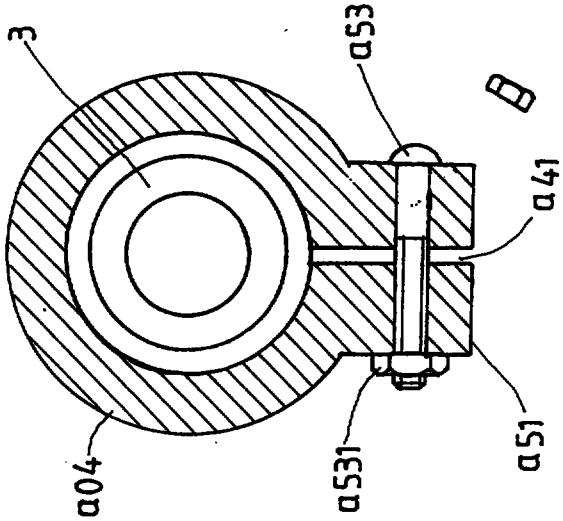

Fig.15A

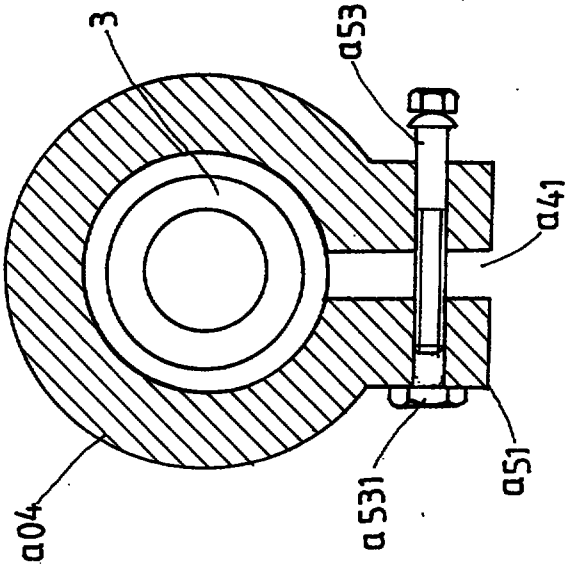

Fig. 15

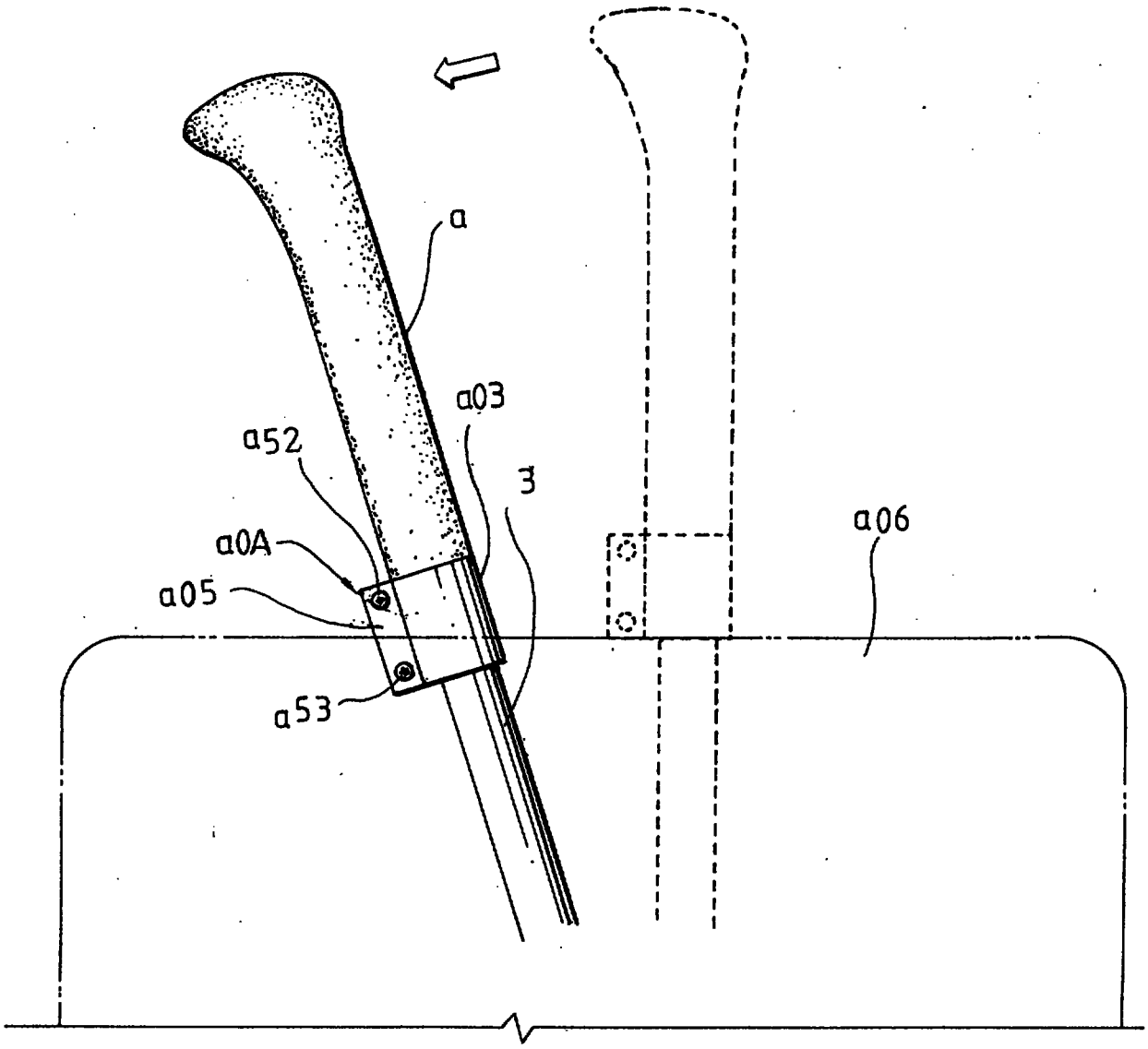

Fig. 16

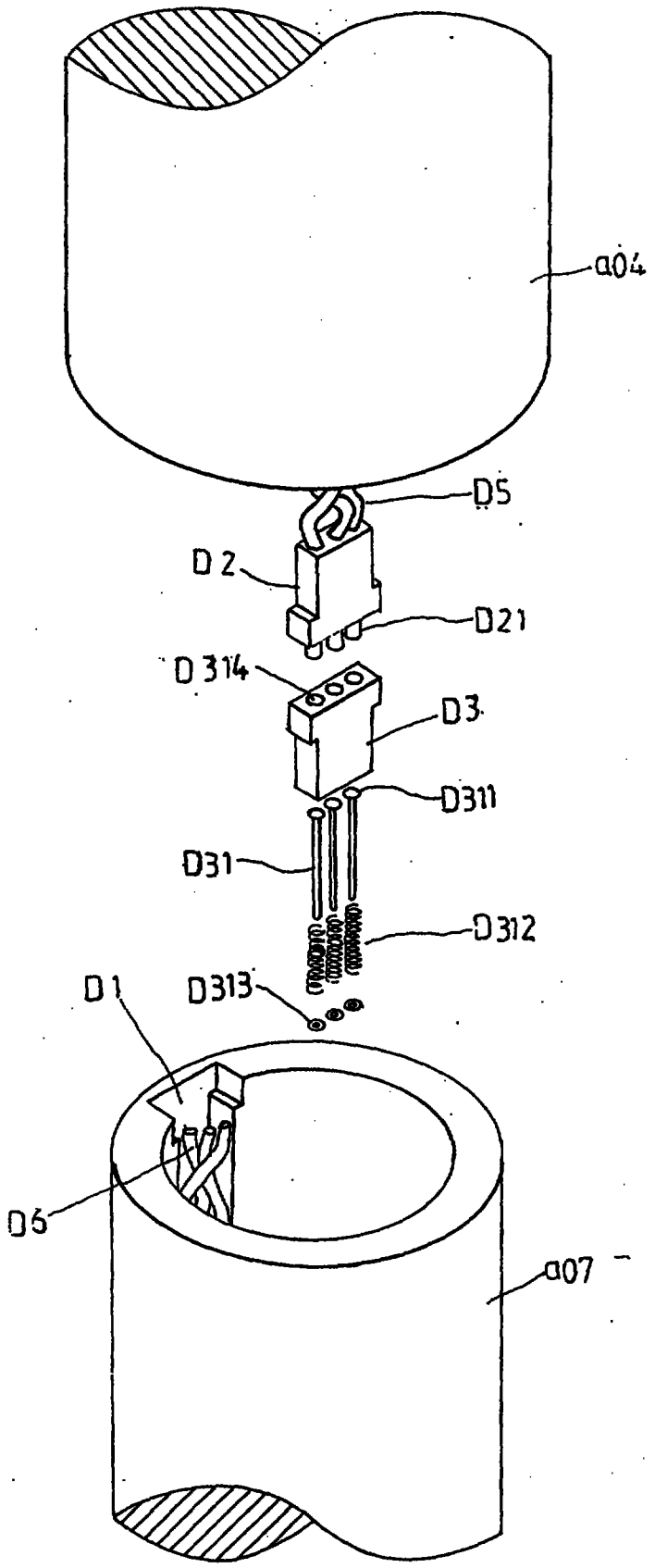

Fig. 17

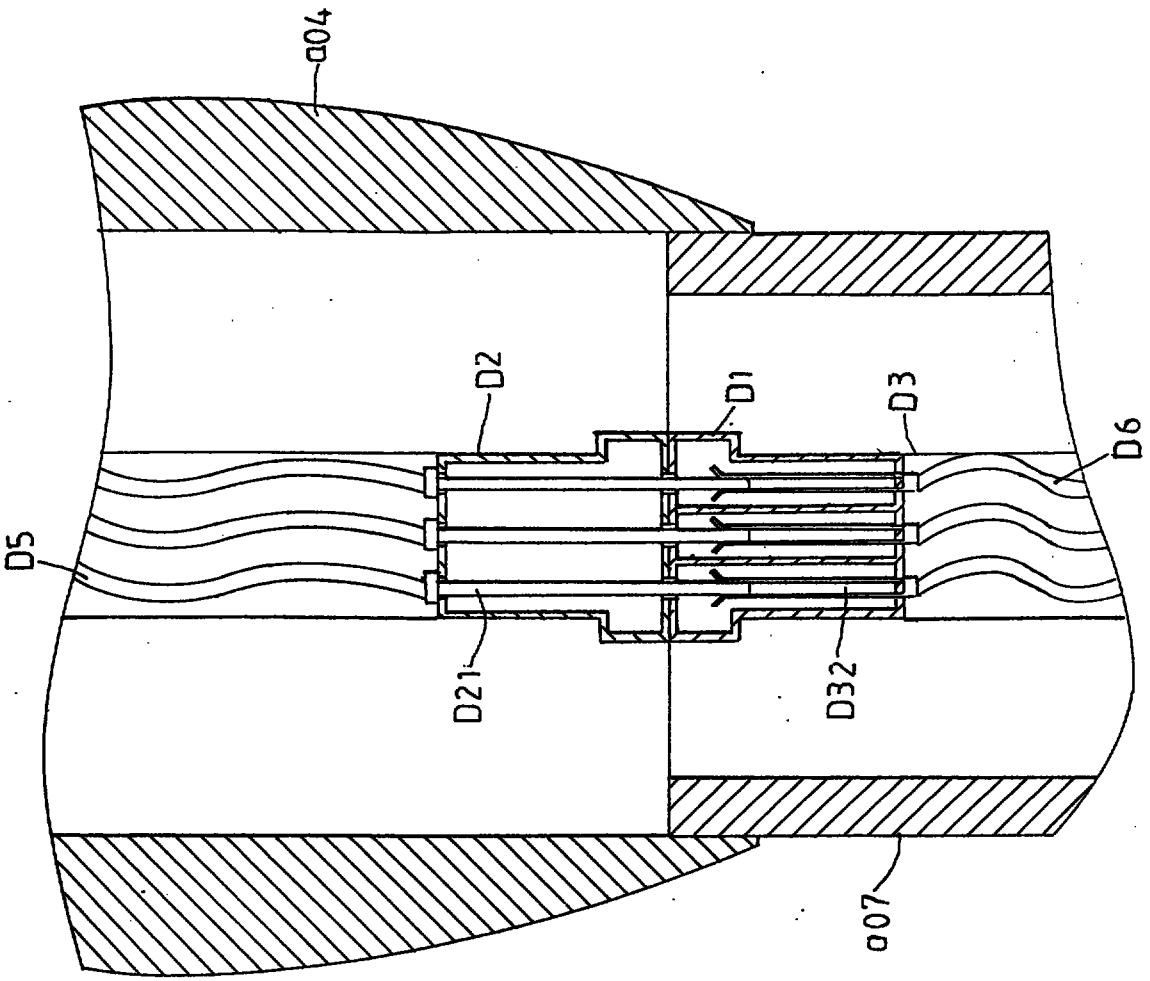

Fig.17A

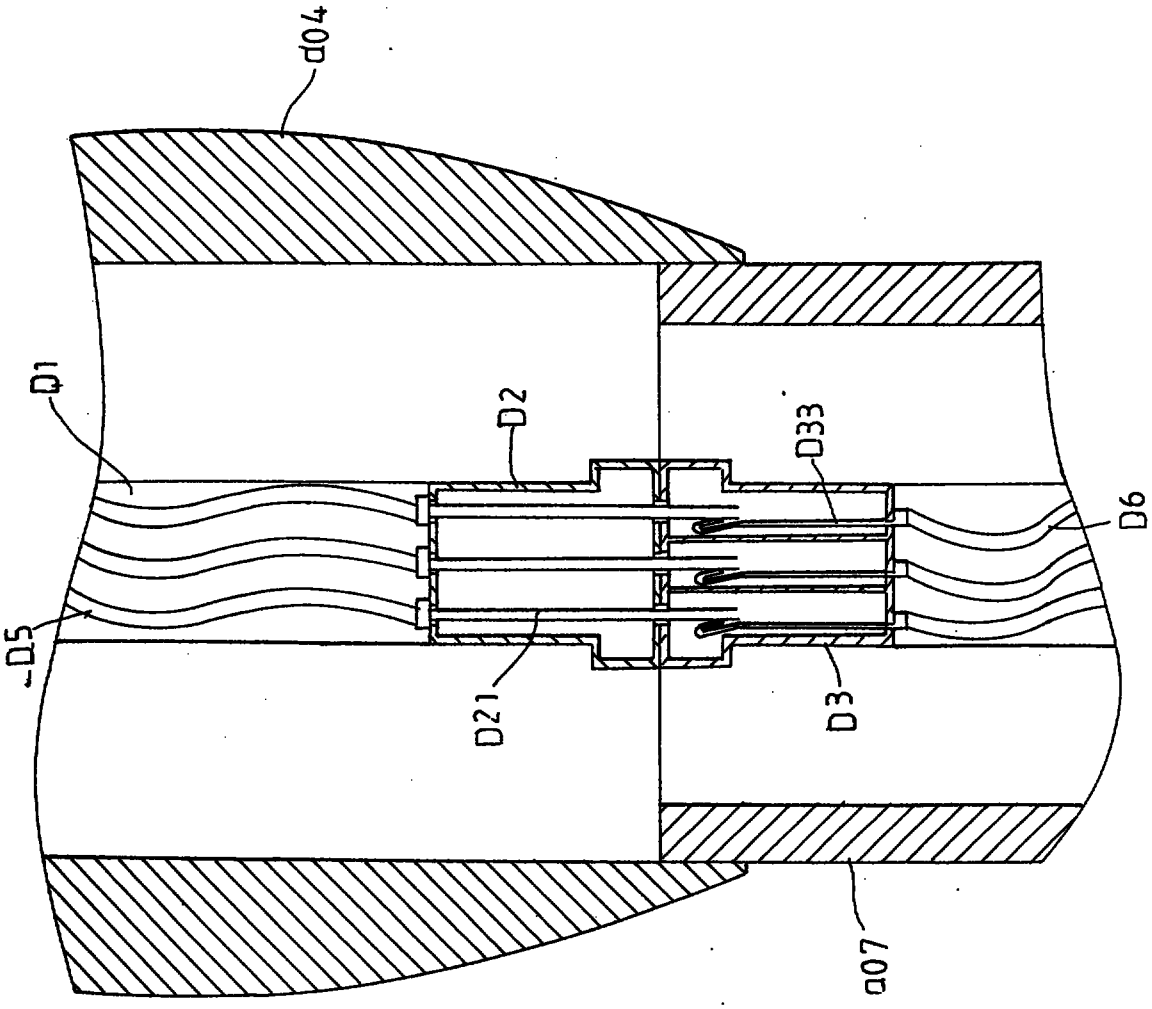

Fig.17B

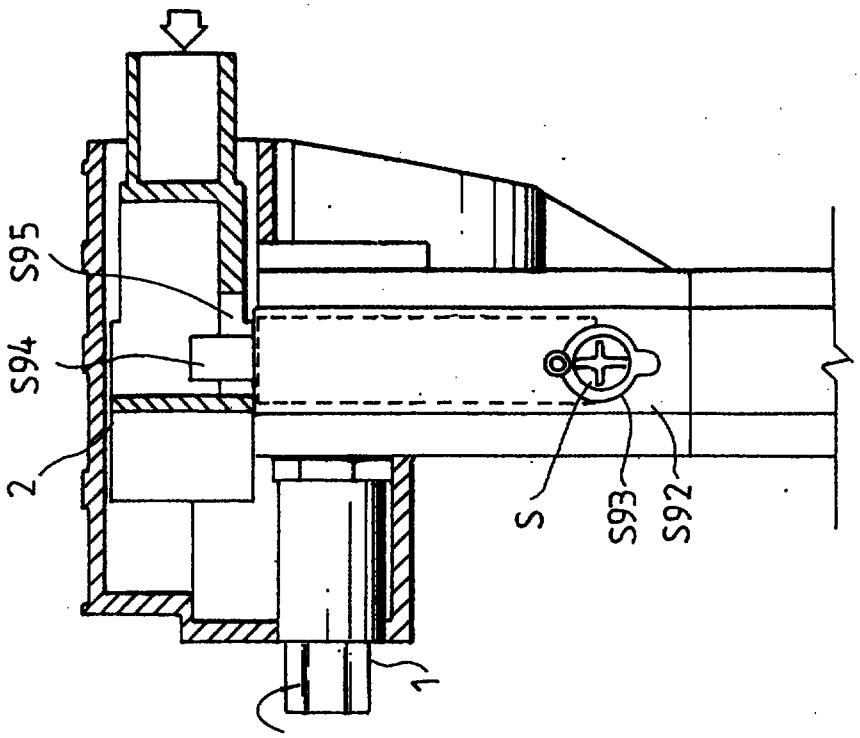

Fig. 19

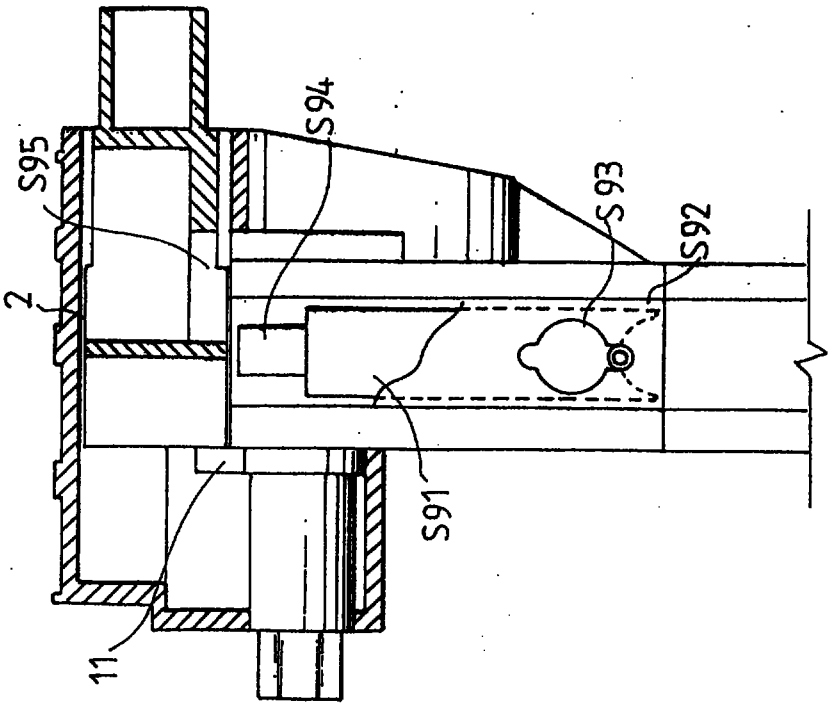

Fig. 18