*NO COVER LETTER

9803098-4

IPOS COPY


**PCT**

WORLD INTELLECTUAL PROPERTY ORGANIZATION
International Bureau

INTERNATIONAL APPLICATION PUBLISHED UNDER THE PATENT COOPERATION TREATY (PCT)

(51) International Patent Classification 6 : H03M 5/14, G11B 20/14 — A1

(11) International Publication Number: WO 97/22182

(43) International Publication Date: 19 June 1997 (19.06.97)

(21) International Application Number: PCT/JP96/03626

(22) International Filing Date: 12 December 1996 (12.12.96)

(30) Priority Data:
7/324169 13 December 1995 (13.12.95) JP



(71) Applicants: MATSUSHITA ELECTRIC INDUSTRIAL CO., LTD. [JP/JP]; 1006, Oaza Kadoma, Kadoma-shi, Osaka 571 (JP). KABUSHIKI KAISHA TOSHIBA [JP/JP]; 72, Horikawa-cho, Saiwai-ku, Kawasaki-shi, Kanagawa 210 (JP). PIONEER ELECTRONIC CORPORATION [JP/JP]; 4-1, Meguro 1-chome, Meguro-ku, Tokyo 153 (JP). HITACHI, LTD. [JP/JP]; 4-6, Kanda Surugadai, Chiyoda-ku, Tokyo 101 (JP).

(72) Inventors: TANAKA, Shin-ichi; 1-42-14, Yamatehigashi, Tanabe-cho, Tsuzuki-gun, Kyoto 610-03 (JP). SHIMADA, Toshiyuki; 4-11-11, Kanokodaikitamachi, Kita-ku, Kobe-shi, Hyogo 651-15 (JP). KOJIMA, Tadashi; 77-19, Tomiokanishi 4-chome, Kanazawa-ku, Yokohama-shi, Kanagawa 236 (JP). HIRAYAMA, Koichi; 7-10, Gumizawa 1-chome, Totsuka-ku, Yokohama-shi, Kanagawa 245 (JP). MORIYAMA, Yoshiaki; Corporate Research and Development Laboratory, Pioneer Electronic Corporation, 6-1-1, Fujimi, Tsurugashima-shi, Saitama 350-02 (JP). YOKOGAWA, Fumihiko; Corporate Research and Development Laboratory, Pioneer Electronic Corporation, 6-1-1, Fujimi, Tsurugashima-shi, Saitama 350-02 (JP). ARAI, Takao; 65-24, Ibukino, Midori-ku, Yokohama-shi, Kanagawa 226 (JP). TAKEUCHI, Toshifumi; D109, Obirin haitsu, 307-2, Minezawa-cho, Hodogaya-ku, Yokohama-shi, Kanagawa 240 (JP).

(74) Agents: AOYAMA, Tamotsu et al.; Aoyama & Partners, IMP Building, 3-7, Shiromi 1-chome, Chuo-ku, Osaka-shi, Osaka 540 (JP).



(81) Designated States: CN, KR, MX, SG, VN, European patent (AT, BE, CH, DE, DK, ES, FI, FR, GB, GR, IE, IT, LU, MC, NL, PT, SE).

**Published**
*With international search report.*
*Before the expiration of the time limit for amending the claims and to be republished in the event of the receipt of amendments.*


(54) Title: A DIGITAL MODULATION APPARATUS, A DIGITAL MODULATION METHOD, AND A RECORDING MEDIUM THEREFOR


(57) Abstract
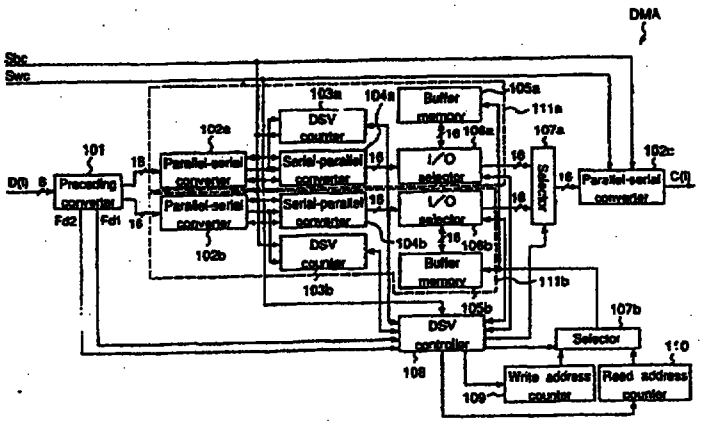
This digital modulation apparatus (DMA) includes ROM tables (201a, 201b, 201c, and 201d) for storing plural conversion tables (Tp(m) and Ts(m)) containing the runlength-limited code words (C) corresponding to the data words (D); end-runlength memories (203a and 203b) and evaluators (204a and 204b) for determining whether the runlength-limit constraints are satisfied in the interconnection between two consecutive code words when the data words (D(i)) to be converted are supplied; and a DSV controller (108) for storing each of the code words (C1(i) and C2(i)) that can be selected from two conversion tables (Tp(1) and Tp(4)) to buffer memories (105a and 105b) when the runlenght-limit constraints are satisfied, and selecting the code words (C(i)) with the greatest effect suppressing the low frequency component in the obtained signal when the code words (C(i)) are NRZI converted.