25 Mar 1997
9700971-6
1st's copy

TITLE OF THE INVENTION

SCROLL-TYPE OILLESS FLUID MACHINE

BACKGROUND OF THE INVENTION

Field of the Invention

The present invention relates to a scroll-type oilless fluid machine which has a driver designed to transmit the torque of an electric element to a orbiting scroll.

Description of the Related Art

A conventional scroll-type fluid machine, a compressor in particular, is equipped with a scroll compressing element and an electric element as disclosed in Japanese Patent Laid-Open No. 62-282186, for example. The scroll compressing element is constructed by a stationary scroll which has a frame with a bearing at the center thereof, an end plate fixed to the frame, and a spiral lap vertically mounted on the end plate, and a orbiting scroll which has an end plate, a spiral lap vertically mounted on one surface of the end plate, and a boss vertically installed on the other surface of the end plate; the stationary scroll and the orbiting scroll are assembled with the laps engaged with each other, and a driver provided on the rotary shaft of the electric element is fitted to the boss of the orbiting scroll.

An Oldham's coupling for making the orbiting scroll revolve along a circular orbit without causing it to rotate with respect to the stationary scroll is incorporated as a discrete ring-shaped component and keys are fitted in the grooves formed in the frame and the end plate of the orbitingscroll to slide it.

The frame is equipped with a thrust bearing to support the thrust load of the orbiting scroll.

To design the scroll-type fluid machine, the oilless scroll-type compressor in particular, which has the structure stated above, the load in the axial direction of the orbiting scroll is an important consideration. Special lubrication is required for the thrust bearing.

For this reason, in the conventional machine, the thrust bearing and the section where the stationary scroll is mounted are integrally formed on the frame with a step provided between them and the dimension of the step is tightly controlled, thereby controlling the dimension of the engagement between the stationary scroll and the orbiting scroll and of the thrust bearing.

The frame, however, is usually made of an ironbase material, presenting a problem in that the thrust bearing tends to incur seizure due to the thrust load applied to the orbiting scroll.

In an effort to solve the problem, as shown in Fig. 13, the conventional machine was provided with a slide component 102 glued to a thrust bearing 100A of a frame 100 with an adhesive agent 102 to prevent the seizure of the thrust bearing and also a spacer 103 was provided between the stationary scroll and the frame 100 to adjust a thrust bearing dimension a.

In another conventional machine, as shown in Fig. 14, a groove 106 was formed in the thrust bearing 100A of the frame 100 without using such a spacer. A slide film 109 was applied to the top surface of a metal plate 108 with a groove 107 formed in the bottom surface thereof and the metal plate 108 was fixed to the frame 100 using a fixing pin 111 for fitting the metal plate 108 to both grooves 106 and 107. In other machine, instead of applying the slide film 109, a slide component 102 was glued to the top surface of the metal plate 108 with the adhesive agent 101 as illustrated in

Fig. 15.

However, the structure shown in Fig. 13 tends to incur uneven thickness of the coat of the adhesive agent 101, making it difficult to control thrust dimension b, resulting in variations in the thrust bearing dimension a. The structure shown in Fig. 14 also makes it difficult to control the dimension of the metal plate 108 itself, i.e. the thrust dimension b, on which the slide film 109 has been applied; it also involves more necessary components with resultant poor assemblability. Further, the structure illustrated in Fig. 15 has both the adhesive agent 101 and the slide film 109, presenting the problems inherent in these two components.

SUMMARY OF THE INVENTION

The present invention has been accomplished with a view toward solving the problems stated above and it is an object of the present invention to provide a high-performance scroll-type oilless fluid machine which permits a highly accurate thrust dimension with a simple structure and which also simplifies the structure and installation for greater ease of assembly.

To this end, according to one aspect of the present invention, there is provided a scroll-type fluid machine which is equipped with a scroll compressing element and an electric element; wherein the scroll compressing element is constituted by a stationary scroll which is fixed to a frame and which has an end plate and a spiral lap vertically mounted on the end plate; a orbiting scroll which has an end plate, a spiral lap vertically mounted on one surface of the end plate, and a boss vertically mounted on the other surface of the end plate; and an Oldham's coupling for making the orbiting scroll move along a circular orbit without causing it to rotate

with respect to the stationary scroll; the frame being provided with a dry bearing for supporting the thrust surface of the orbiting scroll and the dry bearing being engaged with the frame.

With such an arrangement, the dry bearing protects the orbiting scroll from seizure due to the thrust load and tight control of the thrust dimension can be achieved simply by controlling the dimension of the discrete dry bearing. This permits a highly accurate dimension of the thrust bearing of the scroll-type oilless fluid machine, leading to improved performance of the machine.

In particular, since the dry bearing is engaged with the frame, it permits one-touch quick installation and it does not require the adhesive agent, thus eliminating the problem of the variations in the thrust dimension due to the applied adhesive agent. This makes it possible to maintain highly accurate thrust dimension with resultant better assemblability. In addition, the dry bearing will not be dislocated even if it is subjected to a force applied in the radial direction.

According to another aspect of the present invention, there is provided a scroll-type fluid machine which is provided with a scroll compressing element and an electric element; wherein the scroll compressing element is constituted by a stationary scroll which is fixed to a frame and which has an end plate and a spiral lap vertically mounted on the end plate; a orbitingscroll which has an end plate, a spiral lap vertically mounted on one surface of the end plate, and a boss vertically mounted on the other surface of the end plate; and an Oldham's coupling for making the orbiting scroll move along a circular orbit without causing it to rotate with respect to the stationaryscroll; the frame being provided with a dry bearing, which is made of a resin-based material, for supporting the thrust surface of the

orbiting scroll and the dry bearing being engaged with the frame.

With such an arrangement, the variations in the thrust dimension can be successfully controlled in mass production which relies only on the control of the mold made of the resinbased material. This permits easier and yet more accurate control of the thrust bearing dimension of the scroll-type oilless fluid machine.

According to still another aspect of the present invention, there is provided a scroll-type fluid machine which is equipped with a scroll compressing element and an electric element; wherein the scroll compressing element is equipped with a stationary scroll secured to the frame and a orbiting scroll driven by the electric element; and the electric element is equipped with a motor cover fixed to the frame; the scroll compressing element being covered with an outer cover which has a connection port communicated with a discharge opening thereof and an electric system compartment for housing electric components such as a capacitor being provided at the end of a motor cover on the opposite side from the scroll compressing element.

With such an arrangement, the whole scroll-type oilless fluid machine can be made smaller. Moreover, since the motor cover serves also as the outer sheath, the total number of components can be reduced, thus achieving a reduced assembly manhour and lower cost.

BRIEF DESCRIPTION OF THE DRAWINGS

Fig. 1 is a cross-sectional view showing a scroll-type oilless air compressor of an air compressing apparatus illustrative of an embodiment of the present invention;

Fig. 2 is a cross-sectional view showing the top of a frame of the air

compressor shown in Fig. 1;

Fig. 3 is a perspective view illustrative of the frame and a dry bearing of Fig. 2;

Fig. 4 is a cross-sectional view illustrative of the top section of a frame of an air compressor of another embodiment according to the present invention;

Fig. 5 is a cross-sectional view illustrative of the top section of a frame of an air compressor of still another embodiment according to the present invention;

Fig. 6 is a cross-sectional view illustrative of the top section of a frame of an air compressor of yet another embodiment according to the present invention;

Fig. 7 is a cross-sectional view illustrative of the section top of a frame of an air compressor of a further embodiment according to the present invention;

Fig. 8 is an enlarged view illustrative of the circled section shown in Fig. 7;

Fig. 9 is a cross-sectional view illustrative of the top section of a frame of an air compressor of a still further embodiment according to the present invention;

Fig. 10 is a cross-sectional view illustrative of the top section of a frame of an air compressor of another embodiment according to the present invention;

Fig. 11 is a side view illustrative of an air compressing apparatus which is an embodiment;

Fig. 12 is a cross-sectional view illustrative of the air compressing apparatus of Fig. 11;

Fig. 13 is a cross-sectional view showing the top section of a frame of a conventional scroll-type oilless fluid machine;

Fig. 14 is a cross-sectional view showing the top section of a frame of another conventional scroll-type oilless fluid machine; and

Fig. 15 is a cross-sectional view showing the top section of a frame of still another conventional scroll-type oilless fluid machine.

DETAILED DESCRIPTION OF THE PREFERRED EMBODIMENTS

The present invention will now be described in conjunction with the embodiments shown in the accompanying drawings.

Fig. 1 is the cross-sectional view showing an oilless scroll-type air compressor 1 of an air compressing apparatus C (shown in Fig. 12 and Fig. 13) illustrative of an embodiment of the present invention.

The air compressor 1 is constructed by a scroll compressing element 2 at the top and an electric element 3 at the bottom. The scroll compressing element 2 is constituted by a frame 5, which has a main bearing 4 at the center thereof, a stationary scroll 6, which is fixed to the frame 5 with a bolt 51, a orbiting scroll 7 which is held between the stationary scroll 6 and the frame 5 via an elastic piece 52.

The stationary scroll 6 is constructed by a disc-shaped end plate 8, an annular wall 9 jutting out on the circumference of one surface of the end plate, and a spiral lap 10 which is vertically provided on the end plate 8 surrounded by the annular wall 9. The stationary scroll 6 has the annular wall 9 and the lap 10 jutting out downward.

The orbiting scroll 7 is constructed by a disc-shaped end plate 11, a spiral lap 12 vertically mounted on one surface of the end plate 11, and a boss 13 jutting out at the center of the other surface of the end plate 11.

The orbiting scroll 7 has the lap 12 jutting out upward.

The stationary scroll 6 and the orbiting scroll 7 have the laps 10 and 12 facing against each other in engagement, forming a plurality of compression chambers 14. The electric element 3 is constituted by a motor cover 15, which is fixed to the frame 5 with a bolt 53, a stator 16 fixed inside the motor cover 15, a rotator 17 provided in the stator 16, and a rotary shaft 18 inserted at the center of the rotator 17. The motor cover 15 is provided with an auxiliary bearing 19 which journals the rotary shaft 18 via a ball bearing 54.

The main bearing 4 is provided with a ball bearing 24 which is fitted to a stepped section 20 of the rotary shaft 18.

Reference numeral 25 denotes a driver for transmitting the torque of the electric element 3 to the orbiting scroll 7. The driver 25 is constructed by a balance weight 26 for balancing with the unbalanced force of the orbiting scroll 7, an eccentric bush 28 which is inserted in the hole in the boss 13 of the orbiting scroll 7 and which makes the orbiting scroll 7 rotate, a pin 29 for positioning the eccentric bush 28 and the balance weight 26, and a bolt 30 for fixing the eccentric bush 28 to the rotary shaft 18.

The stationary scroll 6 has an intake port 31 communicating with the compression chambers 14 on the outer rim of the end plate 8 and a discharge port 32 communicating with the compression chambers 14 at the center of the end plate 8.

Reference numeral 36 denotes an Oldham's coupling for making the orbiting scroll 7 revolve along a circular orbit so that it does not rotate with respect to the stationary scroll 6.

Reference numeral 33 denotes a reinforcing rib which is integrally formed on the rear surface of the end plate 11 of the orbiting scroll 7. The

reinforcing rib 33 has an annular thrust bearing 34 at the center thereof and a keyway section 40 for defining a keyway 35 which engages with a key 41 of the Oldham's coupling 36 on the edge thereof.

In the scroll-type air compressor 1 thus configured, when the electric element 3 is rotated, the torque thereof is delivered to the orbiting scroll 7 via the rotary shaft 18. More specifically, the orbiting scroll 7 is driven by the eccentric bush 28 of the driver 25 which is mounted on the rotary shaft 18 inserted in the hole of the boss 13 of the orbiting scroll 7 and it is caused by the Oldham's coupling 36 to revolve along the circular orbit without rotating with respect to the stationary scroll 6. Then the stationaryscroll 6 and the orbiting scroll 7 gradually reduce the compression chambers 14, which are formed by the scrolls, inward to compress the air flowing in through the intake port 31. The compressed air is discharged through the discharge port 32 of the end plate 8 of the stationary scroll 6.

To assemble the driver 25, the frame 5 is first fixed to the motor cover 15 in which the electric element 3 has been installed. By this time, the ball bearing 24 has been installed to the main bearing 4 of the frame 5. The balance weight 26 is then inserted in the rotary shaft 18 so that it is brought in contact with the inner ring of the ball bearing 24. The pin 29 is set on the balance weight 26 inserted in the rotary shaft. The eccentric bush 28 is then inserted in the rotary shaft 18 so that it is fitted to the pin 29. Lastly, the eccentric bush 28 is fixed to the rotary shaft 18 with the bolt 30.

At this time, a needle bearing 37 and a sealing component 38 are set between the boss 13 and the eccentric bush 28 of the orbiting scroll 7. The inner ring of the ball bearing 24 and the balance weight 26 are fixed by being pressed against the stepped section 20 of the rotary shaft 18 by

the tightening force of the bolt 30 which fixes the eccentric bush 28 to the rotary shaft 18. Thus, the driver 25 is securely fixed with the single bolt 30.

The balance weight 26 and the eccentric bush 28 are positioned by the pin 29, so that the imbalanced force generated by the rotation of the orbiting scroll 7 in operation may be securely cancelled by the balance weight 26.

The driver 25 is fixed to the rotary shaft 18 by the single bolt 30, thereby simplifying the assembly process.

A circular groove 61 is formed in the slide surface of the top of the frame 5, a dry bearing 62 being fitted in the groove 61. The dry bearing 62 is formed into a ring made of a synthetic resin material as illustrated in Fig. 2 and Fig. 3; the ring is fitted in the groove 61 of the frame 5 from above to fix it onto the frame 5.

The dry bearing 62 prevents the seizure caused by the thrust load of the orbiting scroll 7. In addition, highly accurate thrust dimension b can be obtained simply by controlling the dimension of the discrete dry bearing 62. As a result, highly accurate thrust bearing dimension a of the air compressor 1 can be achieved, leading to improved performance of the air compressor 1.

In particular, since the dry bearing 62 is fitted to the groove 61 of the frame 5, it can be attached quickly by one touch, eliminating the need for an adhesive agent. This solves the problem of the variations in the thrust dimension b due to the presence of the adhesive agent, makes it possible to maintain highly accurate thrust dimension b, and improves the assemblability. Further, since the dry bearing 62 is engaged with the groove 61, the dry bearing 62 is not dislocated even if it is subjected to a

radial force.

Furthermore, the dry bearing 62, which is molded using a synthetic resin material, makes it possible to control the variations in the thrust dimension b, when it is produced in mass production, simply by controlling the mold of the resin material. Hence, the thrust bearing dimension a of the air compressor 1 can be controlled more easily and more accurately.

Fig. 4 through Fig. 10 show another embodiment. In Fig. 4, a circular stepped section 64, which is recessed inward, is formed in place of the groove 61 on the top surface, i.e. the slide surface, of the frame 5. The dry bearing 62 is fitted to the stepped section 64 from above and the outer circumference thereof is engaged with the frame 5. In Fig. 5, a circular stepped section 66, which is recessed outward, is formed on the top surface, i.e. the slide surface, of the frame 5. The dry bearing 62 is then fitted to the stepped section 66 from above and the inner circumference thereof is engaged with the frame 5. In either case, the same advantages as those described above can be obtained.

In Fig. 6, a stepped section 67 is formed on the inner circumference and a stepped section 68 is formed on the outer circumference on the top surface, i.e. slide surface, of the frame 5. Further, the dry bearing 62 is designed so that the cross section thereof is shaped like a cap with jaws 69, 69 formed on the inner and outer circumferences and the cap is fitted from above onto the stepped sections 67 and 68. In Fig. 7 also, the capshaped dry bearing 62 is fitted onto the frame 5 without forming the stepped sections 67 and 68. In this case, as shown in Fig. 8, the distal ends of the jaws 69, 69 of the dry bearing 62 are provided with hooks 71, 71 which jut out inward. Engaging the hooks 71, 71 with grooves 72, 72 formed in the frame 5 fixes the dry bearing 62 further securely. In Fig. 9, the jaws 69

are formed only on the inner circumference of the dry bearing 62, whereas the jaws 69 are formed only on the outer circumference thereof in Fig. 10. In either case, the dry bearing 62 can be easily and quickly fitted to the frame 5 simply by pushing it onto the frame 5 from above. In addition, the engagement of the jaws 69 with the frame 5 prevents the dry bearing 62 from being dislocated. In particular, the frame 5 shown in Fig. 9 and Fig. 10 has neither a groove nor a stepped section, thus achieving better workability.

The stationary scroll 6 of the scroll compressing element 2, which is located at the top end of the air compressor 1 thus configured, is covered with a cap-shaped outer cover 74 which is fixed to the frame 5 with a screw 75. The outer cover 74 is equipped with a connection port 76 for connecting the air compressor with other equipment; the connection port 76 is communicated with the discharge port 32 of the air compressor 1 via a pipe 77.

An opening 78 is formed at the bottom of the motor cover 15 on the opposite side from the scroll compressing element 2, a terminal 79 being attached to the motor cover 15 to seal the opening 78. The terminal 79 is electrically connected to the stator 16 of the electric element 3 of the air compressor 1. At the bottom circumference of the motor cover 15, an electrical system box 81 is attached to the motor cover 15 with a bolt 82, the terminal 79 protruding into an electrical system chamber 83 in the electric system box 81.

The electrical system chamber 83 includes a capacitor 84 for starting and operating the electric element 3, and a starting relay 86. A power switch 87 is attached to the side surface of the electrical system box 81 so that it juts out of the side surface. All these electrical components are

electrically connected to the terminal 79. Further, a base 89 equipped with legs 88 is attached to the bottom of the electrical system box 81 with a bolt 91; a power cable 92 is housed in the base 89 and a plug 93 thereof can be drawn out of the base 89.

The structure of the air compressing apparatus C in accordance with the present invention makes it possible to reduce the size of the whole apparatus. In addition, the motor cover 15, which serves also as the outer cover, makes it possible to achieve a reduced number of required components, reduced assembly manhour, and lower cost.

Thus, according to the configuration of one aspect of the present invention, the dry bearing prevents the seizure of the orbiting scroll caused by thrust load, and accurate control of the thrust dimension can be accomplished simply by controlling the dimension of the discrete dry bearing. As a result, the dimension of the thrust bearing of the scroll-typeoilless fluid machine can be controlled with high accuracy, leading to improved performance.

In particular, since the dry bearing is engaged with the frame, it can be attached quickly, eliminating the need for an adhesive agent, thus solving the problem of the variations in the thrust dimension due to the presence of the adhesive agent as in the conventional apparatus. This makes it possible to maintain a highly accurate thrust dimension and to improve the assemblability. Further, the dry bearing will not be dislocated even if it is subjected to a radial force.

Further according to the configuration of another aspect of the present invention, the variations in the thrust dimension can be controlled in mass production performed simply by controlling a mold of a resin material. Hence, the thrust bearing dimension of the scroll-type oilless fluid machine

can be controlled more easily and more accurately.

The configuration in accordance with still another aspect of the present invention allows the size of the whole scroll-type oilless fluid machine to be reduced. In addition, the motor cover, which serves also as an outer cover, makes it possible to reduce the total number of required components and to achieve reduced assembly man-hour and lower cost.

WHAT IS CLAIMED IS:

1. A scroll-type oilless fluid machine comprising:

a scroll compressing element; and

an electric element; wherein

said scroll compressing element is provided with a stationary scroll fixed to a frame and a orbiting scroll driven by said electric element; and

said electric element is provided with a motor cover fixed to said frame; wherein

said scroll compressing element is covered with an outer cover which has a connection port communicated with a discharge opening thereof and an electric system compartment for housing electric components such as a capacitor is provided at the end of said motor cover on the opposite side from said scroll compressing element.



SCROLL-TYPE OILLESS FLUID MACHINE

ABSTRACT OF THE DISCLOSURE

A highperformance, scroll-type oilless fluid machine has a simple structure which enables highly accurate control of a thrust dimension and easy installation to achieve improved assemblability. The scroll-type oilless fluid machine includes a scroll compressing element and an electric element, wherein the scroll compressing element is constituted by: a stationaryscroll which is fixed to a frame and which has an end plate and a spiral lap vertically mounted on the end plate; and a orbiting scroll which has an end plate, a spiral lap vertically mounted on one surface of said end plate, and a boss vertically mounted on the other surface of the end plate; and an Oldham's coupling for making the orbiting scroll revolve along a circular orbit without causing it to rotate with respect to the stationary scroll. The frame is provided with a dry bearing for supporting the thrust surface of the end plate of the orbiting scroll and the dry bearing is engaged with the frame.

Figure 1

THIS SHEET HAS BEEN REPLACED

FIG. 1

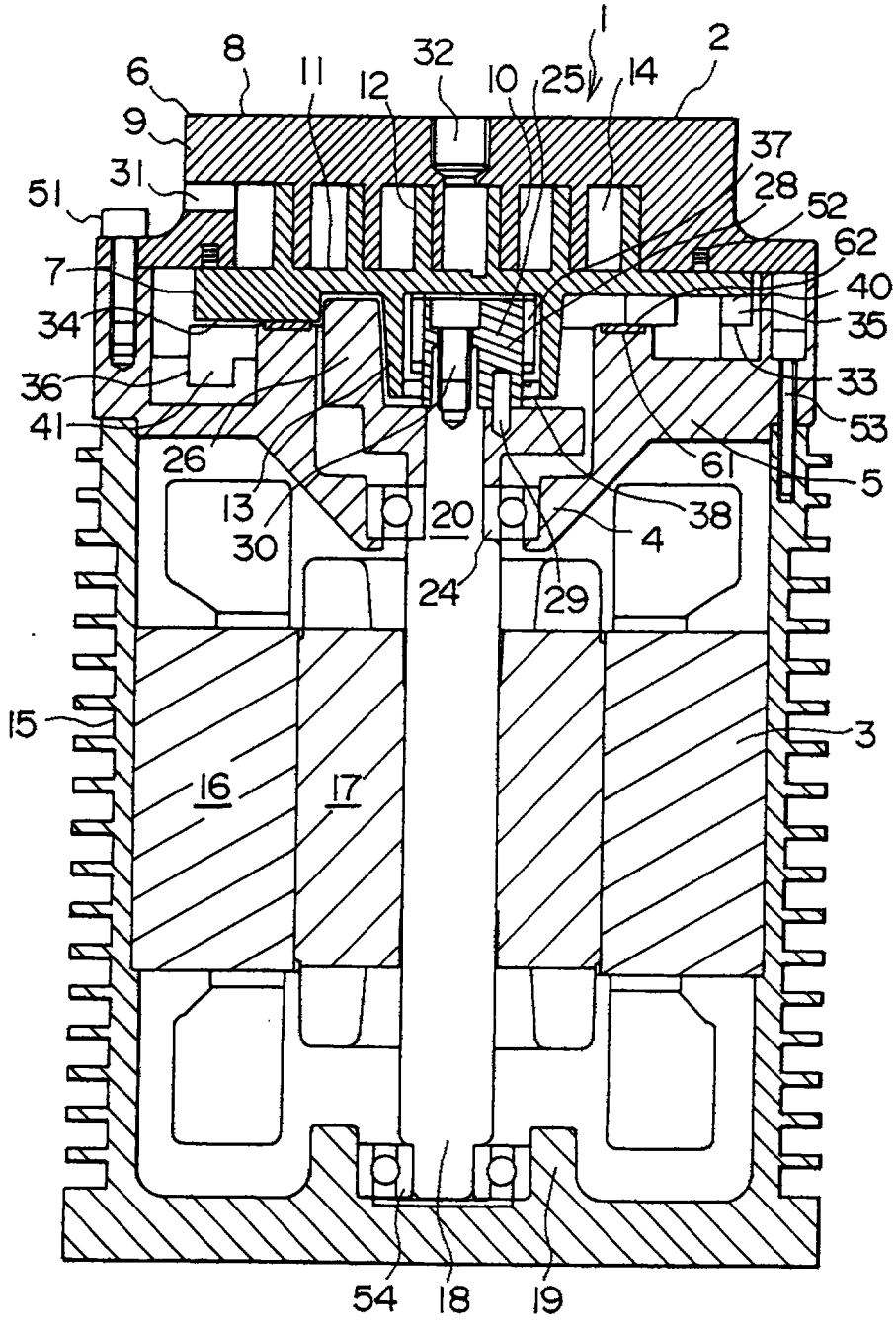
1
2
6
8
11
12
32
10
25
14
9
37
31
28
51
52
62
7
40
34
35
36
33
41
53
26
61
5
13
20
38
30
4
24
29
15
3
16
17
54
18
19

FIG. 2

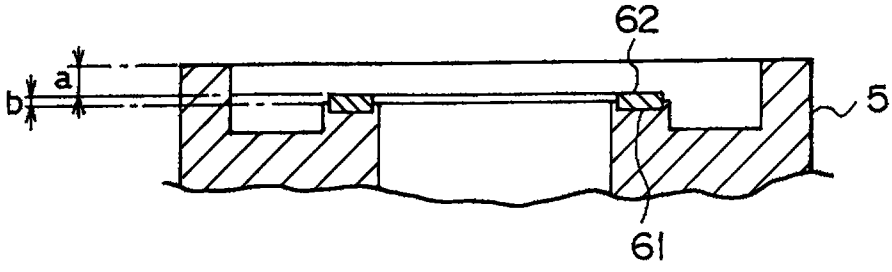

FIG. 3

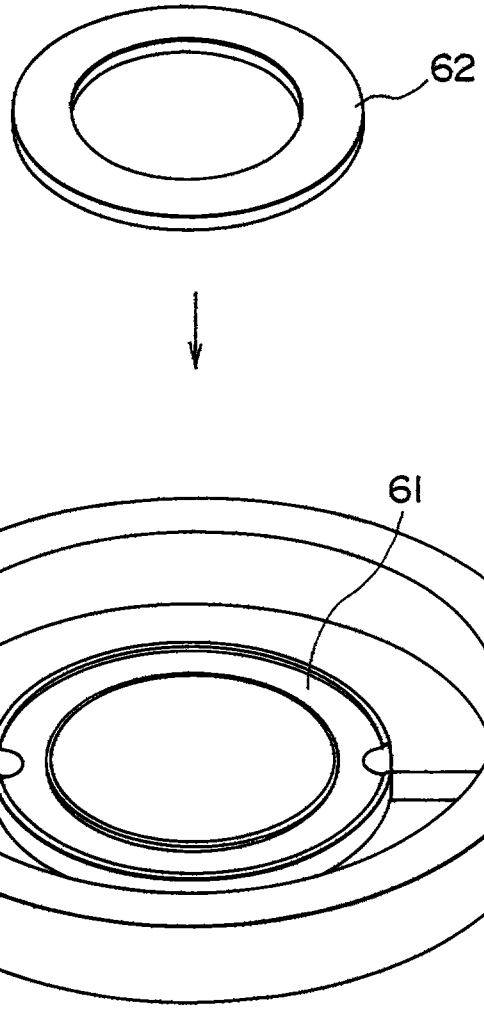

FIG. 4

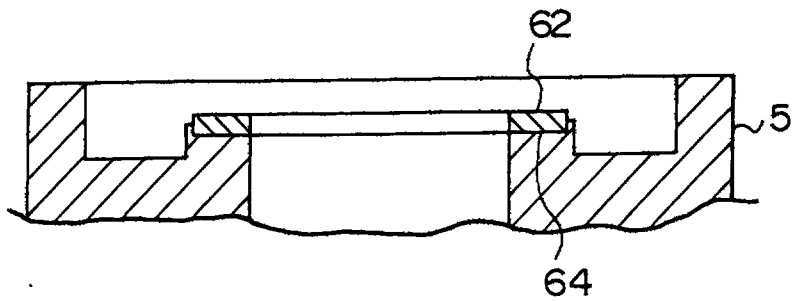

FIG. 5

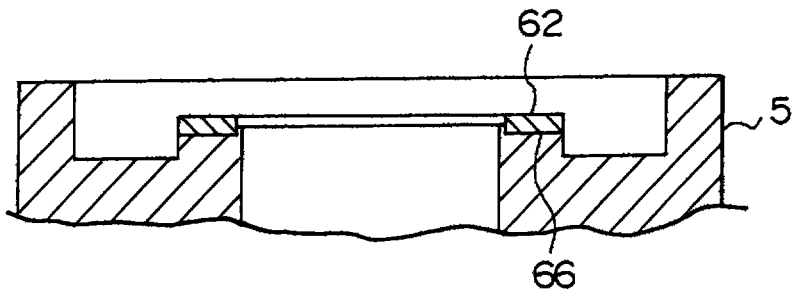

FIG. 6

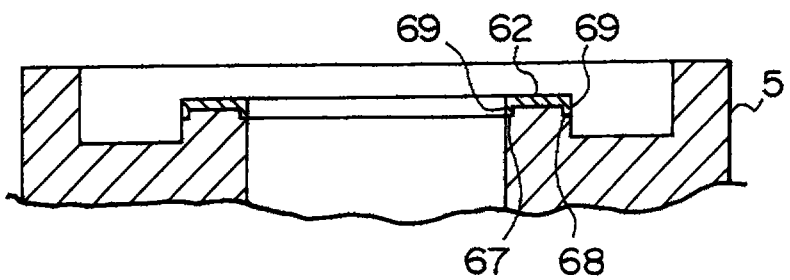

FIG. 7

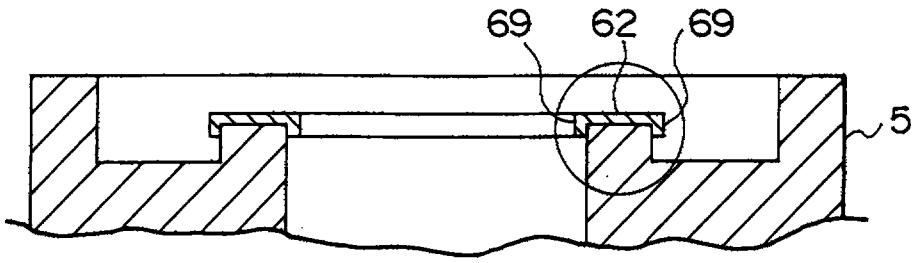

FIG. 8

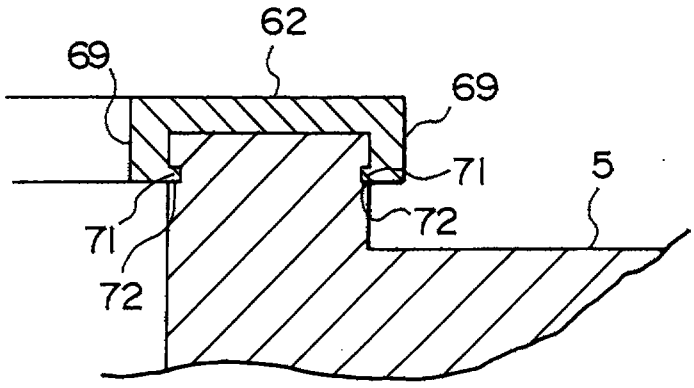

FIG. 9

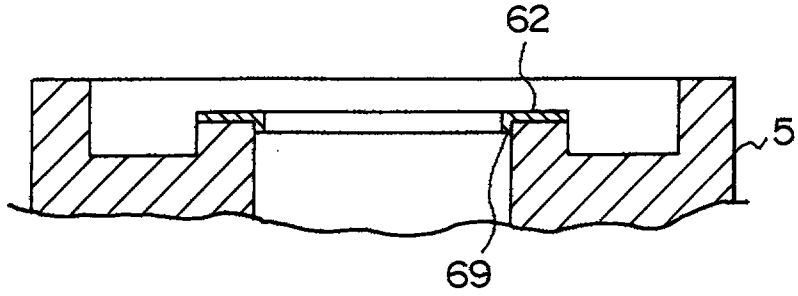

FIG. 10

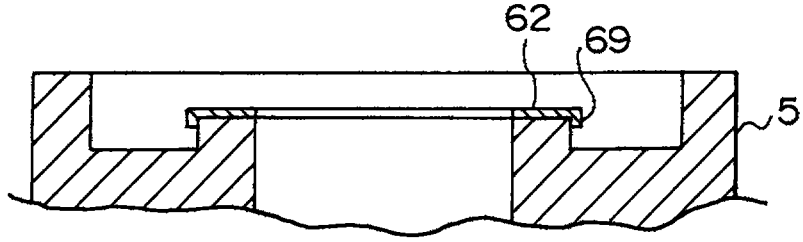

FIG. 11

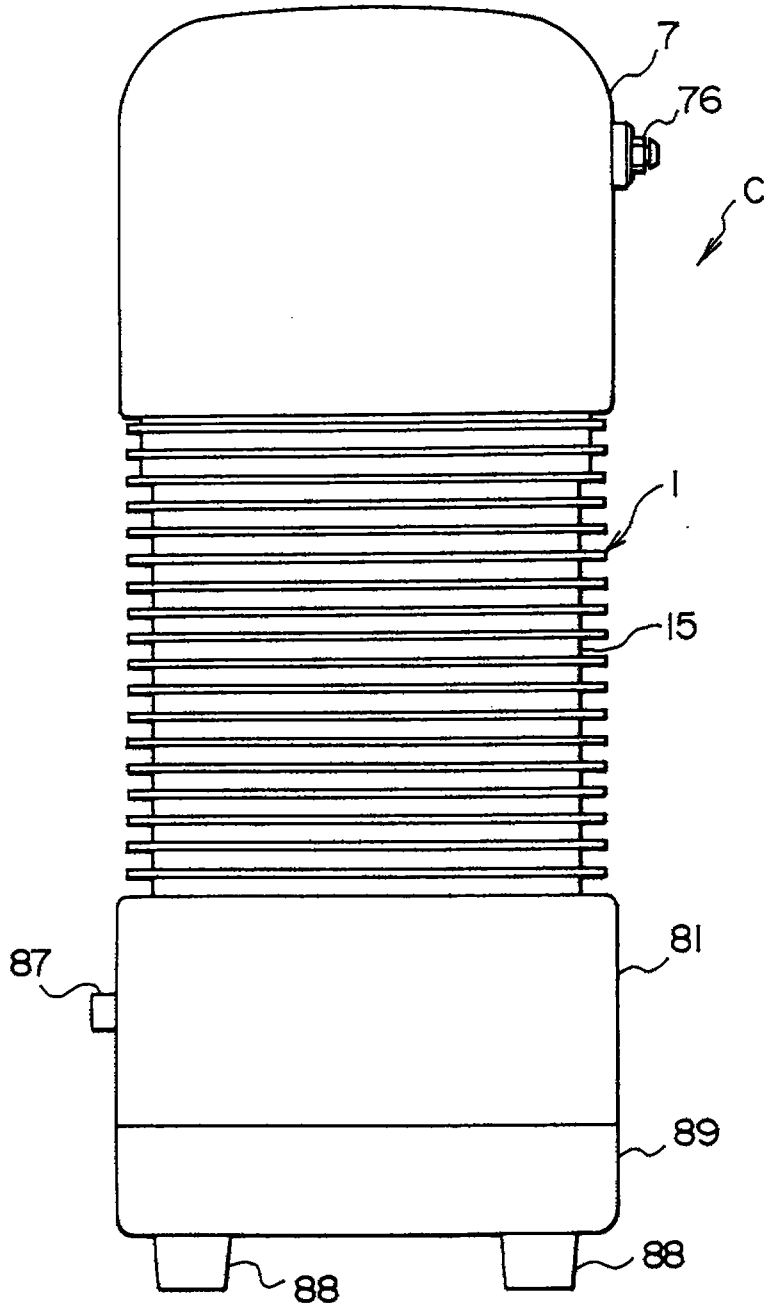

FIG. 12

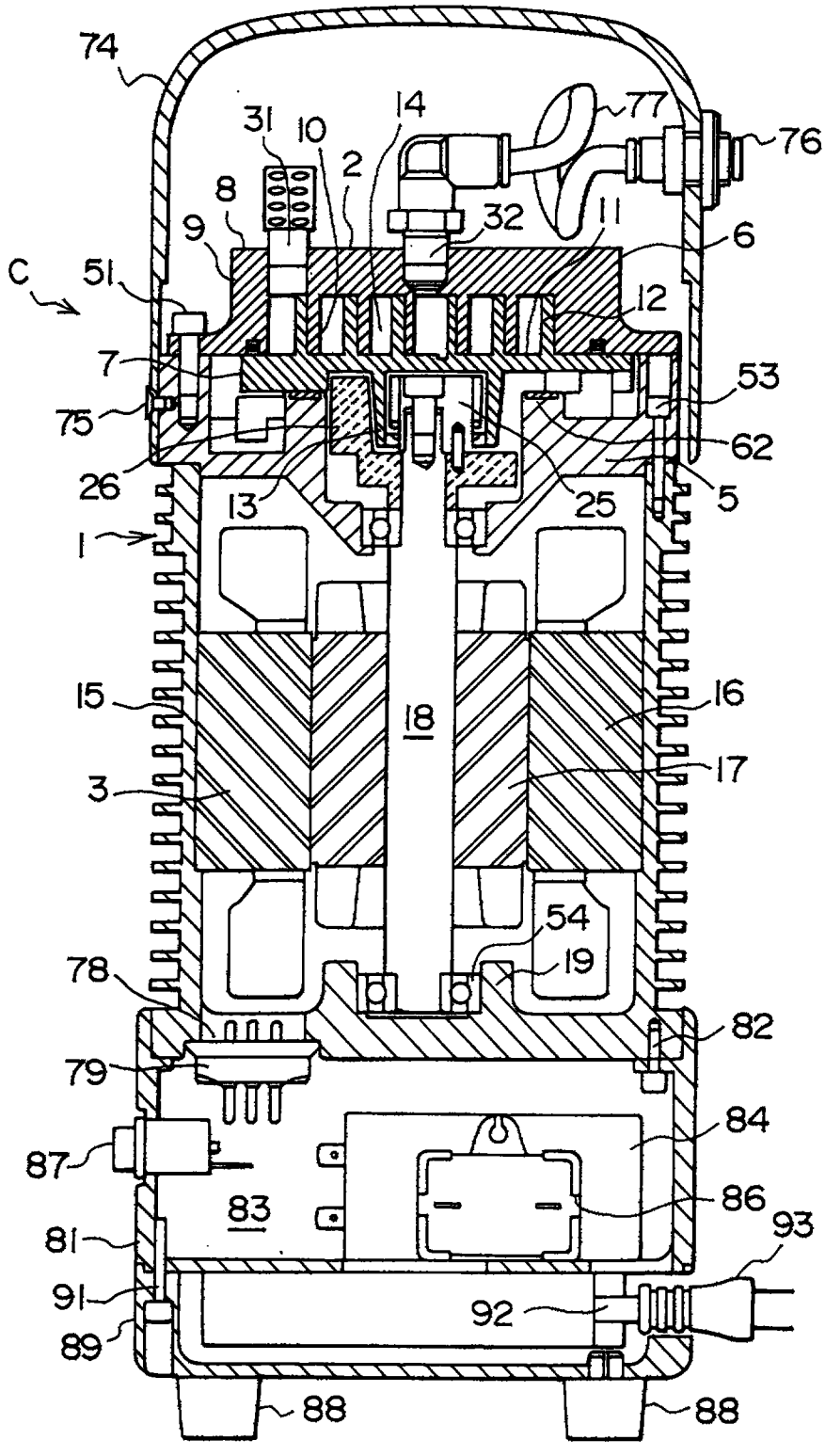
74
31
10
14
77
76
2
8
32
11
6
9
C
51
12
7
53
75
62
26
13
25
5
1
15
16
18
17
3
54
19
78
82
79
84
87
86
83
81
93
91
92
89
88
88

FIG. 13

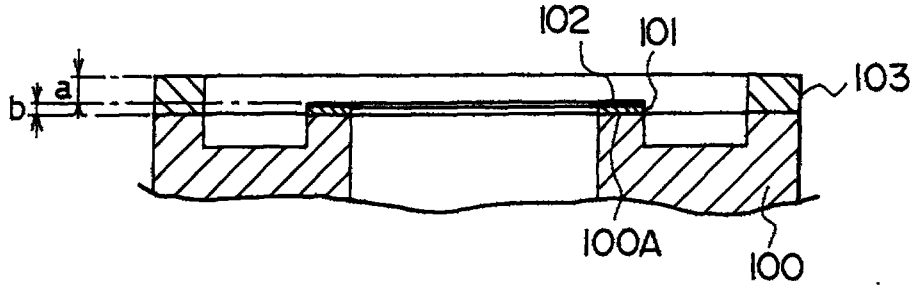

FIG. 14

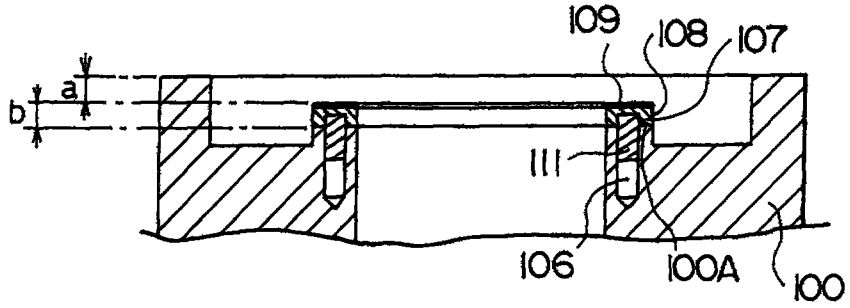

FIG. 15

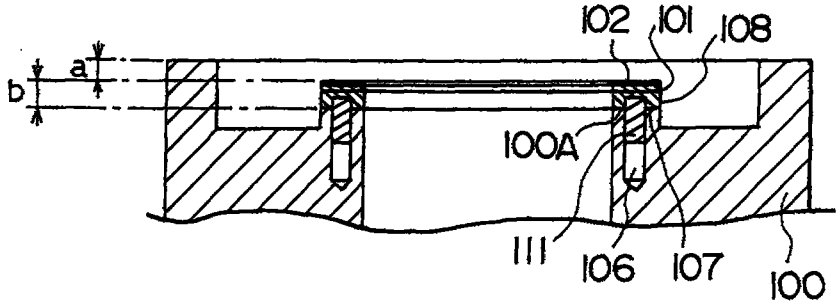

AUSTRALIAN PATENT OFFICE
SEARCH REPORT

Application No.
SG 9700971-6

Box III **TEXT OF THE ABSTRACT (Continuation of item 5 of the first sheet)**

A scroll-type oilless fluid machine (1) comprising a scroll compressing element (2) provided with a stationary scroll (6) fixed to a frame (5) and a orbiting scroll (7) driven by an electric element (3) provided with a motor cover (15) fixed to the frame (5). The scroll compressing element (2) is covered with an outer cover (74) with a connecting port (76) communicated with a discharge opening (32) thereof and electric system (3)compartment (83) for housing electric components such as capacitor (84) provided at the end of the motor cover (15) on the opposite side from the scroll compressing element (2).

REPLACEMENT SHEET
22 MAY 2000