(12) INTERNATIONAL APPLICATION PUBLISHED UNDER THE PATENT COOPERATION TREATY (PCT)

(19) World Intellectual Property Organization
International Bureau

(43) International Publication Date
02 January 2020 (02.01.2020)

WIPO | PCT

(10) International Publication Number
WO 2020/005904 A1

(51) International Patent Classification:
C30B 15/20 (2006.01) *C30B 29/06* (2006.01)

(21) International Application Number:
PCT/US2019/038928

(22) International Filing Date:
25 June 2019 (25.06.2019)

(25) Filing Language: English

(26) Publication Language: English

(30) Priority Data:
16/020,701 27 June 2018 (27.06.2018) US

(71) Applicant: **GLOBALWAFERS CO., LTD.** [CN/CN]; No. 8 Industrial East Road 2, Science-Based Industrial Park, Hsinchu (TW).

(72) Inventors: **RYU, JaeWoo**; 501 Pearl Drive, St. Peters, Missouri 63376 (US). **HUDSON, Carissima Marie**; 501 Pearl Drive, St. Peters, Missouri 63376 (US).

(74) Agent: **SCHUTH, Richard A.** et al.; ARMSTRONG TEASDALE LLP, 7700 Forsyth Blvd., Suite 1800, St. Louis, Missouri 63105 (US).

(81) Designated States *(unless otherwise indicated, for every kind of national protection available)*: AE, AG, AL, AM, AO, AT, AU, AZ, BA, BB, BG, BH, BN, BR, BW, BY, BZ, CA, CH, CL, CN, CO, CR, CU, CZ, DE, DJ, DK, DM, DO, DZ, EC, EE, EG, ES, FI, GB, GD, GE, GH, GM, GT, HN, HR, HU, ID, IL, IN, IR, IS, JO, JP, KE, KG, KH, KN, KP, KR, KW, KZ, LA, LC, LK, LR, LS, LU, LY, MA, MD, ME, MG, MK, MN, MW, MX, MY, MZ, NA, NG, NI, NO, NZ, OM, PA, PE, PG, PH, PL, PT, QA, RO, RS, RU, RW, SA, SC, SD, SE, SG, SK, SL, SM, ST, SV, SY, TH, TJ, TM, TN, TR, TT, TZ, UA, UG, US, UZ, VC, VN, ZA, ZM, ZW.

(84) Designated States *(unless otherwise indicated, for every kind of regional protection available)*: ARIPO (BW, GH, GM, KE, LR, LS, MW, MZ, NA, RW, SD, SL, ST, SZ, TZ, UG, ZM, ZW), Eurasian (AM, AZ, BY, KG, KZ, RU, TJ, TM), European (AL, AT, BE, BG, CH, CY, CZ, DE, DK, EE, ES, FI, FR, GB, GR, HR, HU, IE, IS, IT, LT, LU, LV, MC, MK, MT, NL, NO, PL, PT, RO, RS, SE, SI, SK, SM, TR), OAPI (BF, BJ, CF, CG, CI, CM, GA, GN, GQ, GW, KM, ML, MR, NE, SN, TD, TG).

Published:
— *with international search report (Art. 21(3))*

(54) **Title:** GROWTH OF PLURAL SAMPLE RODS TO DETERMINE IMPURITY BUILD-UP DURING PRODUCTION OF SINGLE CRYSTAL SILICON INGOTS

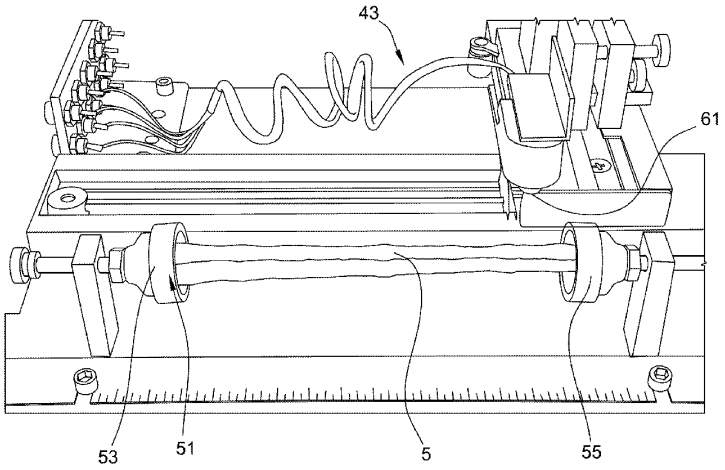

FIG. 4

(57) **Abstract:** Methods for forming single crystal silicon ingots in which plural sample rods are grown from the melt are disclosed. A parameter related to the impurity concentration of the melt or ingot is measured. In some embodiments, the sample rods each have a diameter less than the diameter of the product ingot.

WO 2020/005904 A1