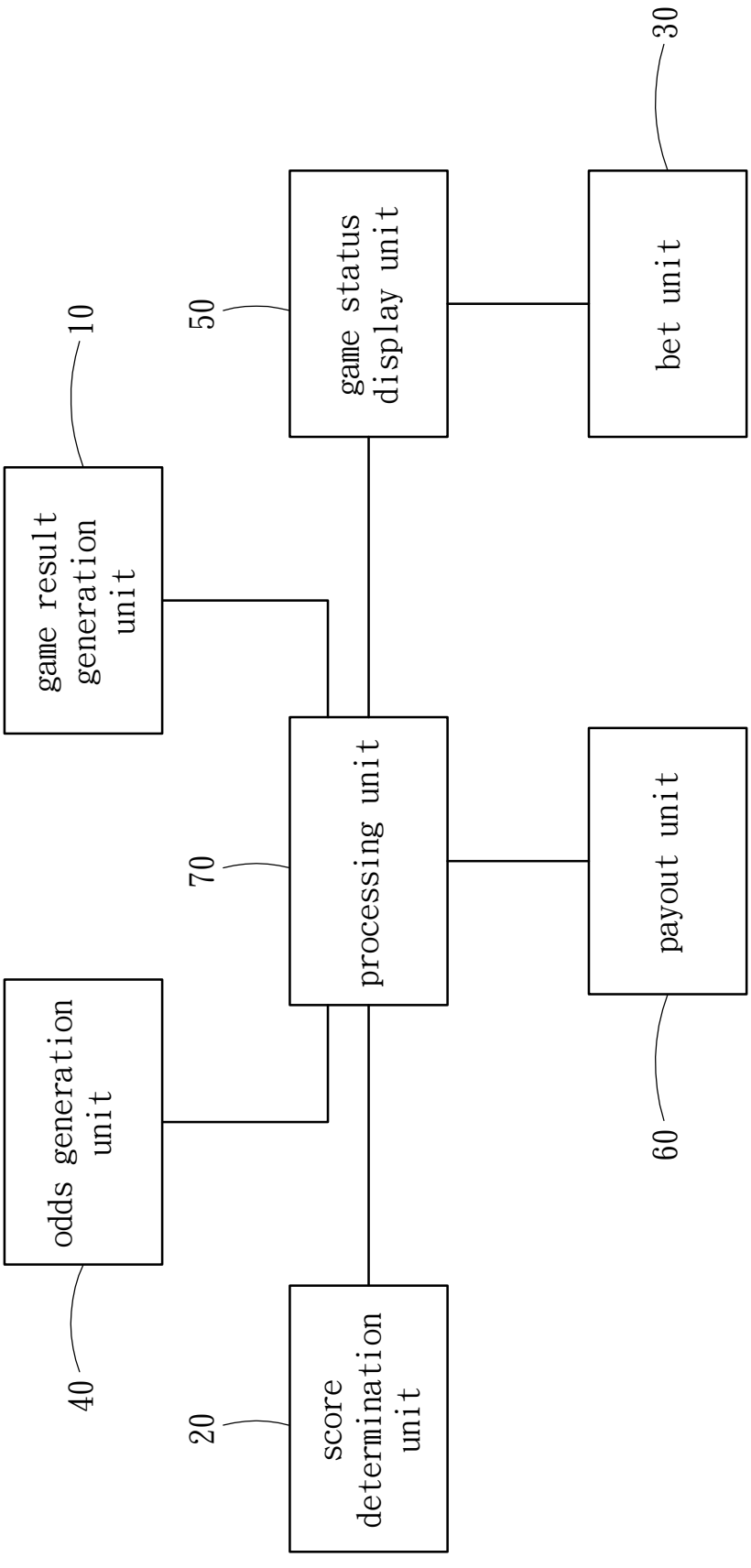
game result generation unit
10
odds generation unit
40
score determination unit
20
processing unit
70
game status display unit
50
bet unit
30
payout unit
60

Fig. 1

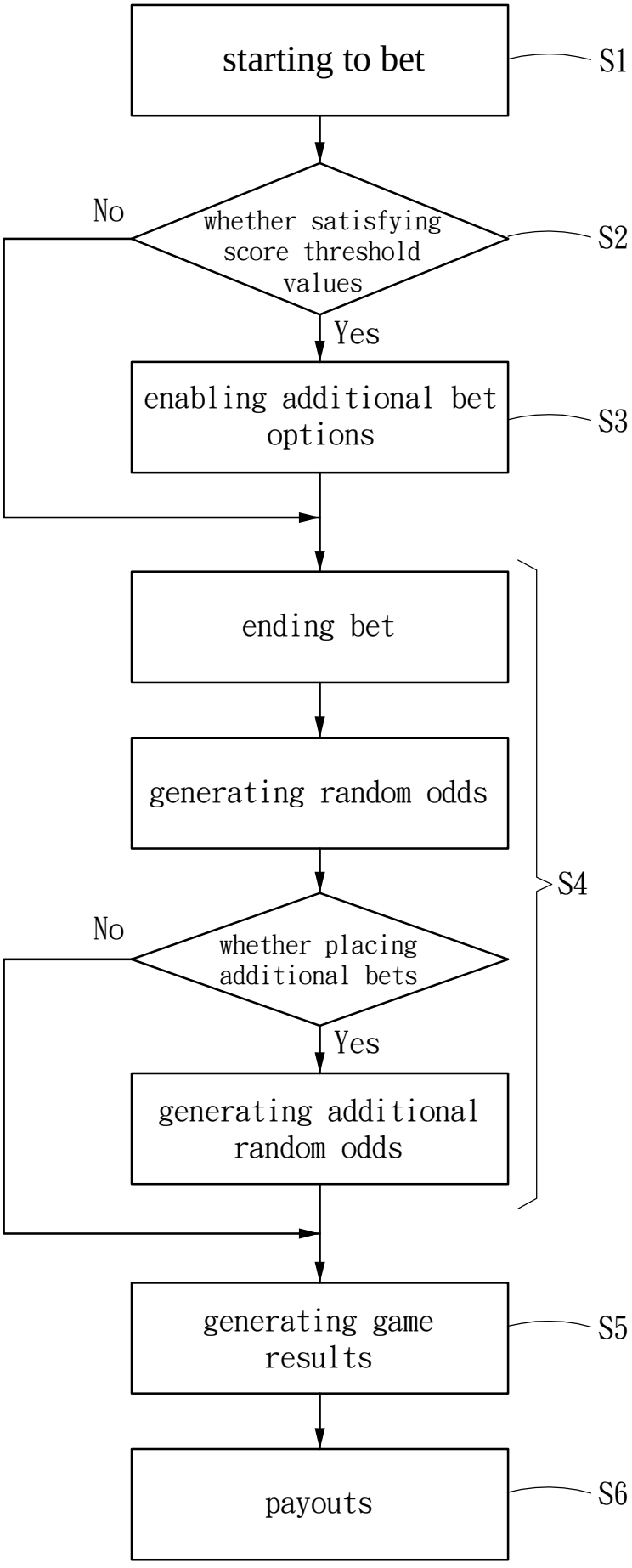
starting to bet
S1
No
whether satisfying score threshold values
S2
Yes
enabling additional bet options
S3
ending bet
generating random odds
S4
No
whether placing additional bets
Yes
generating additional random odds
generating game results
S5
payouts
S6

Fig. 2

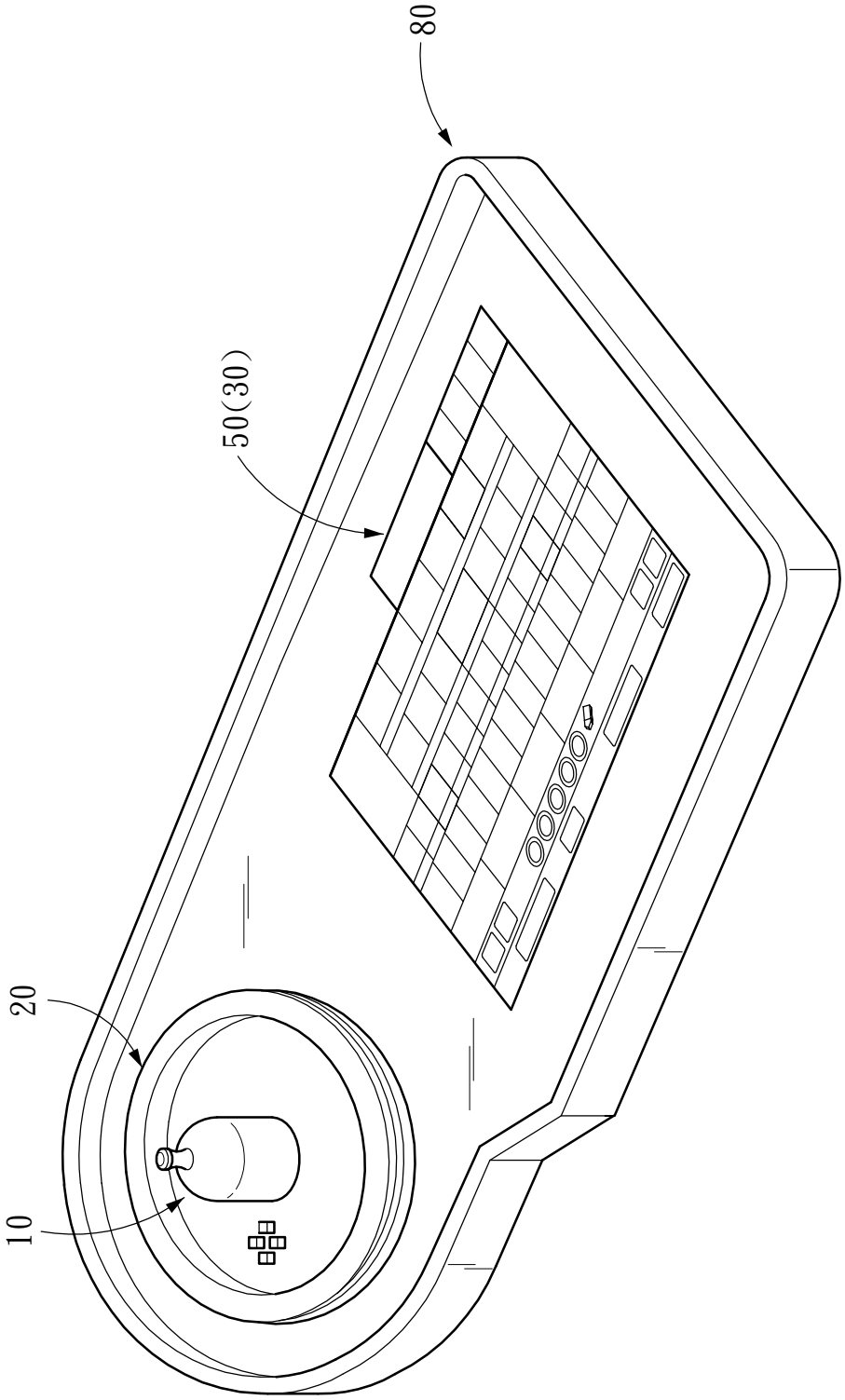

Fig. 3

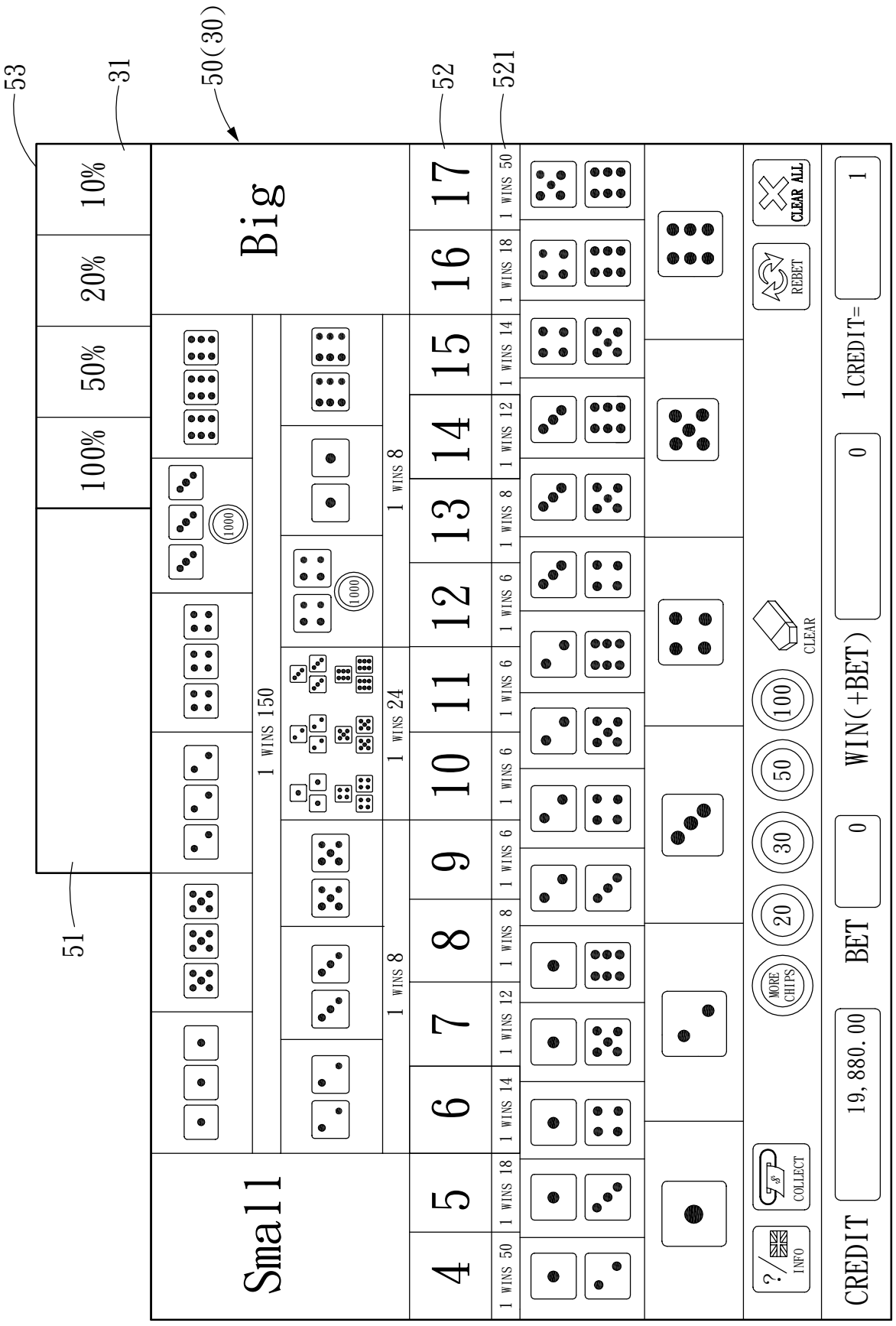
53
31
50(30)
52
521
51
100%
50%
20%
10%
Small
Big
4
5
6
7
8
9
10
11
12
13
14
15
16
17
1 WINS 150
1 WINS 24
1 WINS 8
1 WINS 6
1 WINS 12
1 WINS 14
1 WINS 18
1 WINS 50
INFO
COLLECT
MORE CHIPS
CLEAR
REBET
CLEAR ALL
CREDIT
19,880.00
BET
0
WIN(+BET)
0
1CREDIT=
1

Fig. 4A

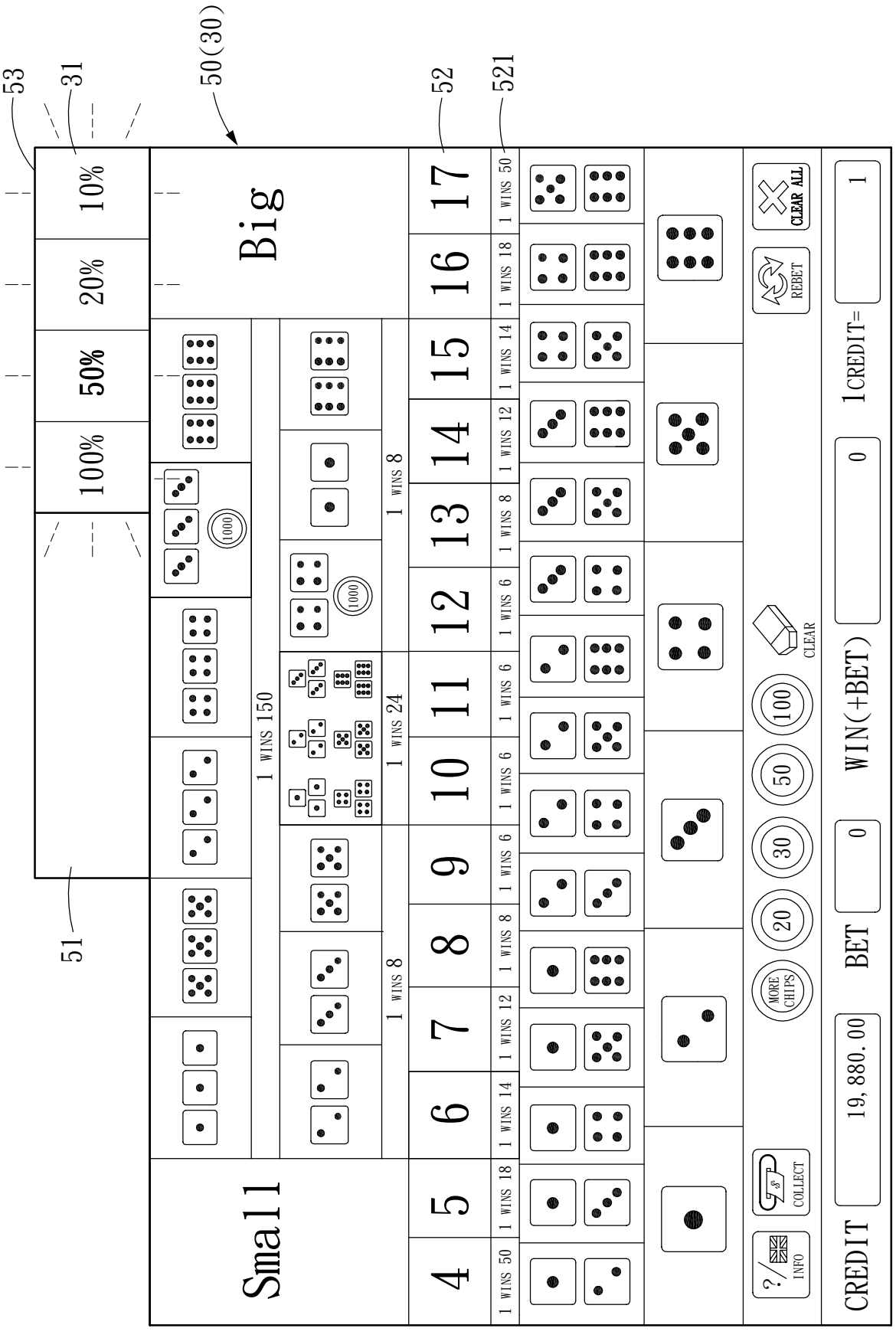
53
31
50(30)
52
521
51
100%
50%
20%
10%
Big
Small
1 WINS 150
1 WINS 24
1 WINS 8
1000
4
5
6
7
8
9
10
11
12
13
14
15
16
17
1 WINS 50
1 WINS 18
1 WINS 14
1 WINS 12
1 WINS 8
1 WINS 6
INFO
COLLECT
MORE CHIPS
20
30
50
100
CLEAR
REBET
CLEAR ALL
CREDIT
19,880.00
BET
0
WIN(+BET)
0
1CREDIT=
1

Fig. 4B

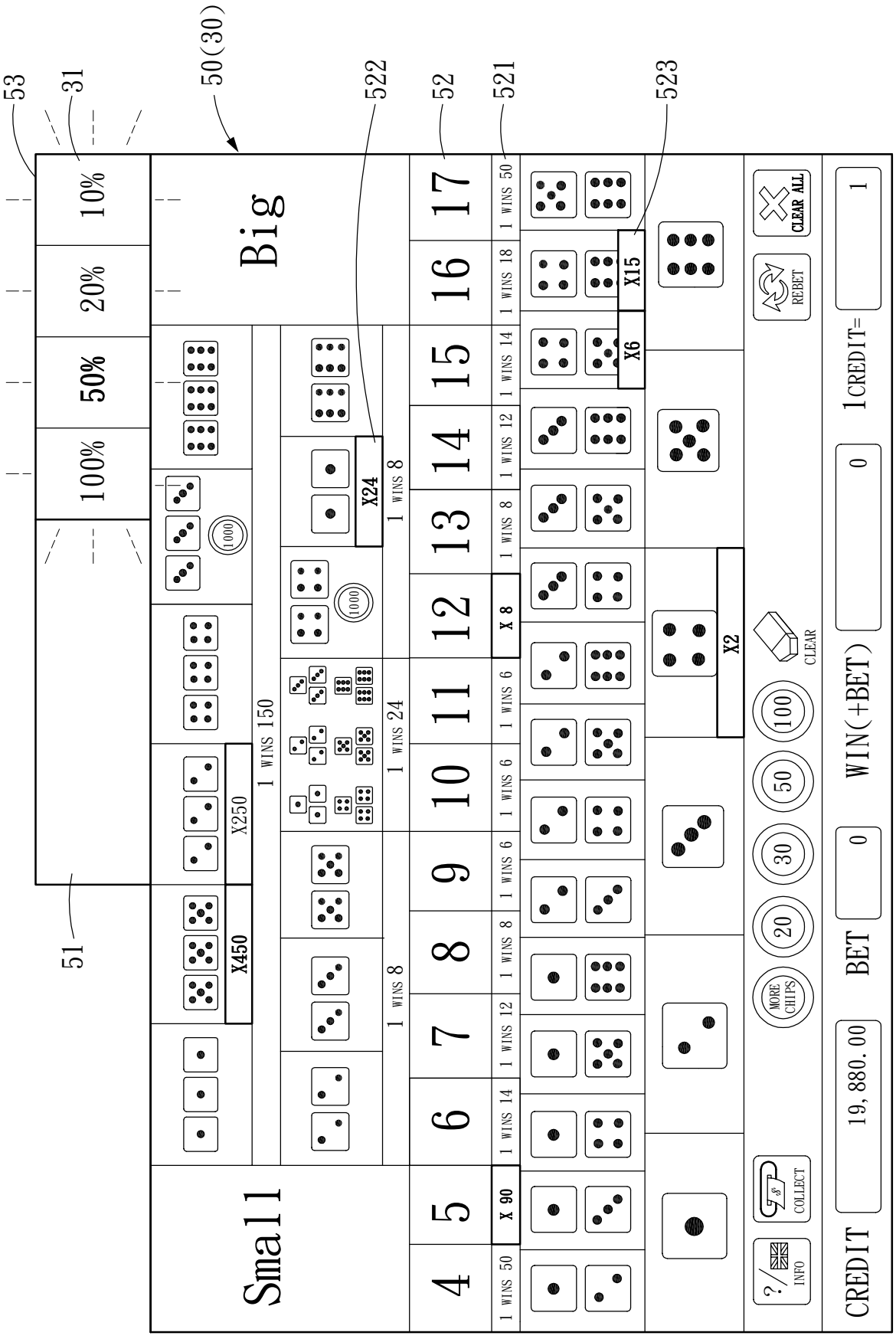
53
31
50(30)
522
52
521
523
51
100%
50%
20%
10%
Small
Big
4 5 6 7 8 9 10 11 12 13 14 15 16 17
X450
X250
X24
X 90
X 8
X2
X6
X15
1 WINS 150
1 WINS 24
1 WINS 8
1 WINS 6
1 WINS 12
1 WINS 14
1 WINS 18
1 WINS 50
1000
MORE CHIPS
20
30
50
100
CLEAR
REBET
CLEAR ALL
INFO
COLLECT
CREDIT
19,880.00
BET
0
WIN(+BET)
0
1CREDIT=
1

Fig. 4C

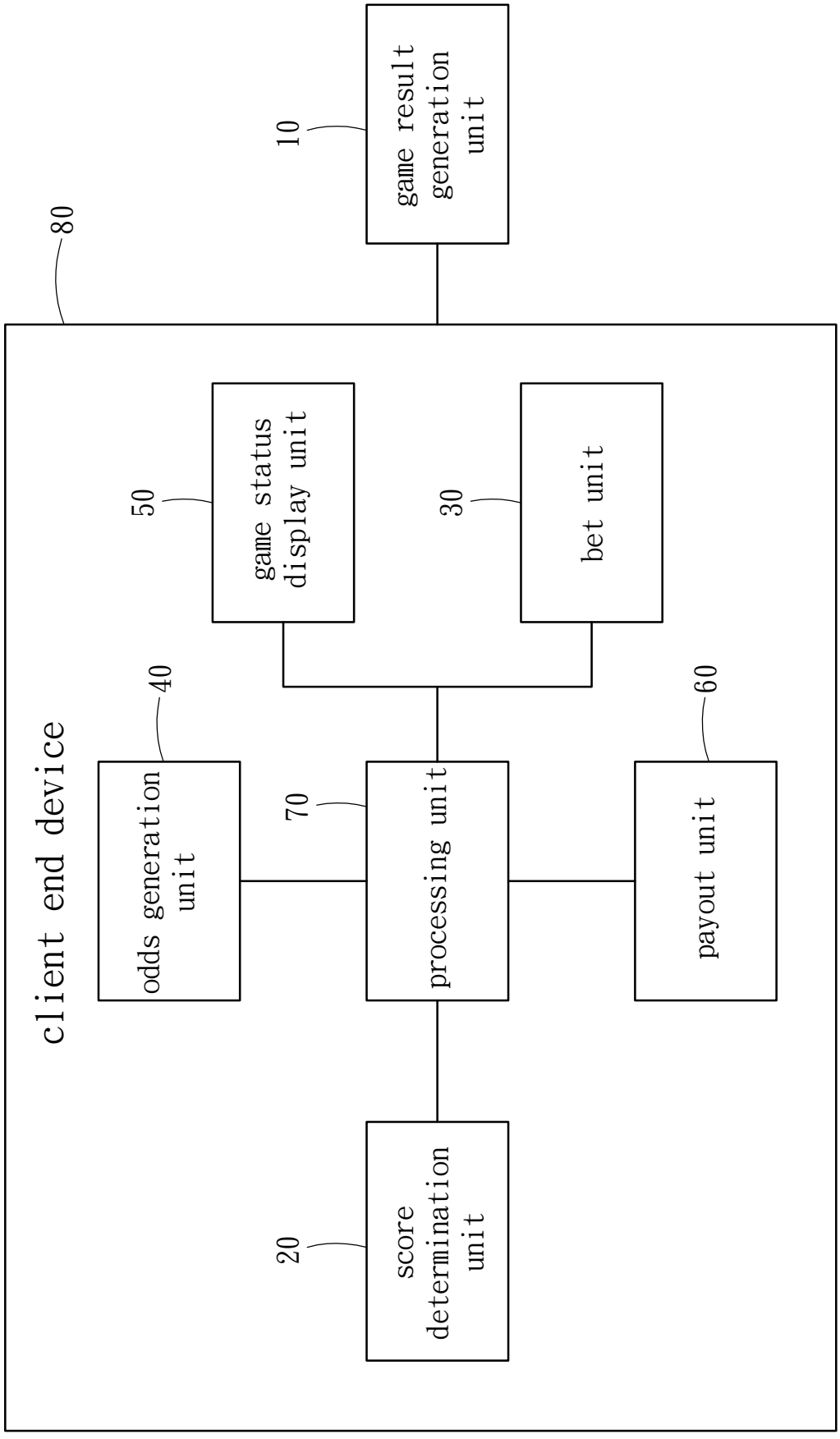
client end device
80
game result generation unit
10
game status display unit
50
bet unit
30
odds generation unit
40
processing unit
70
payout unit
60
score determination unit
20

Fig. 5

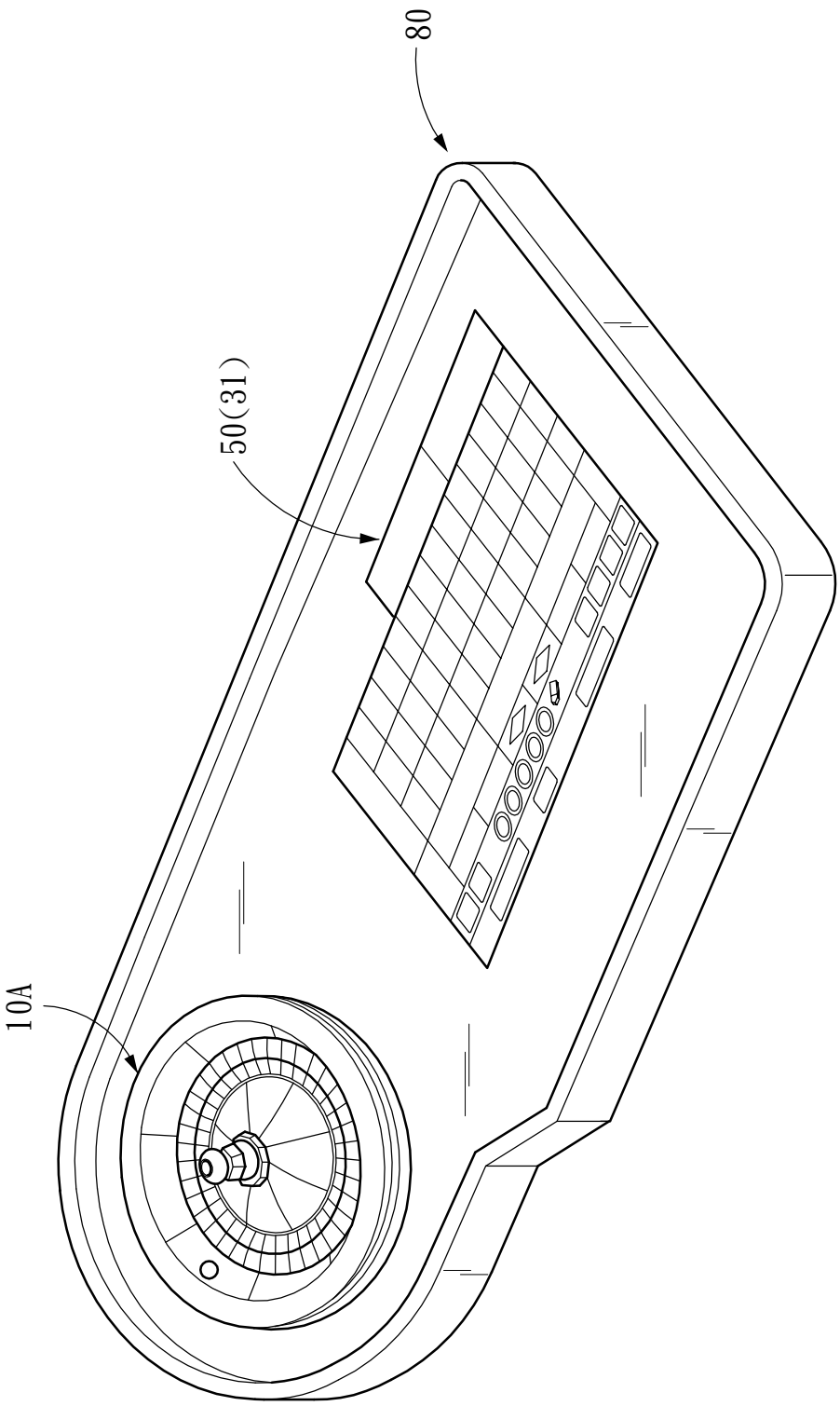

Fig. 6

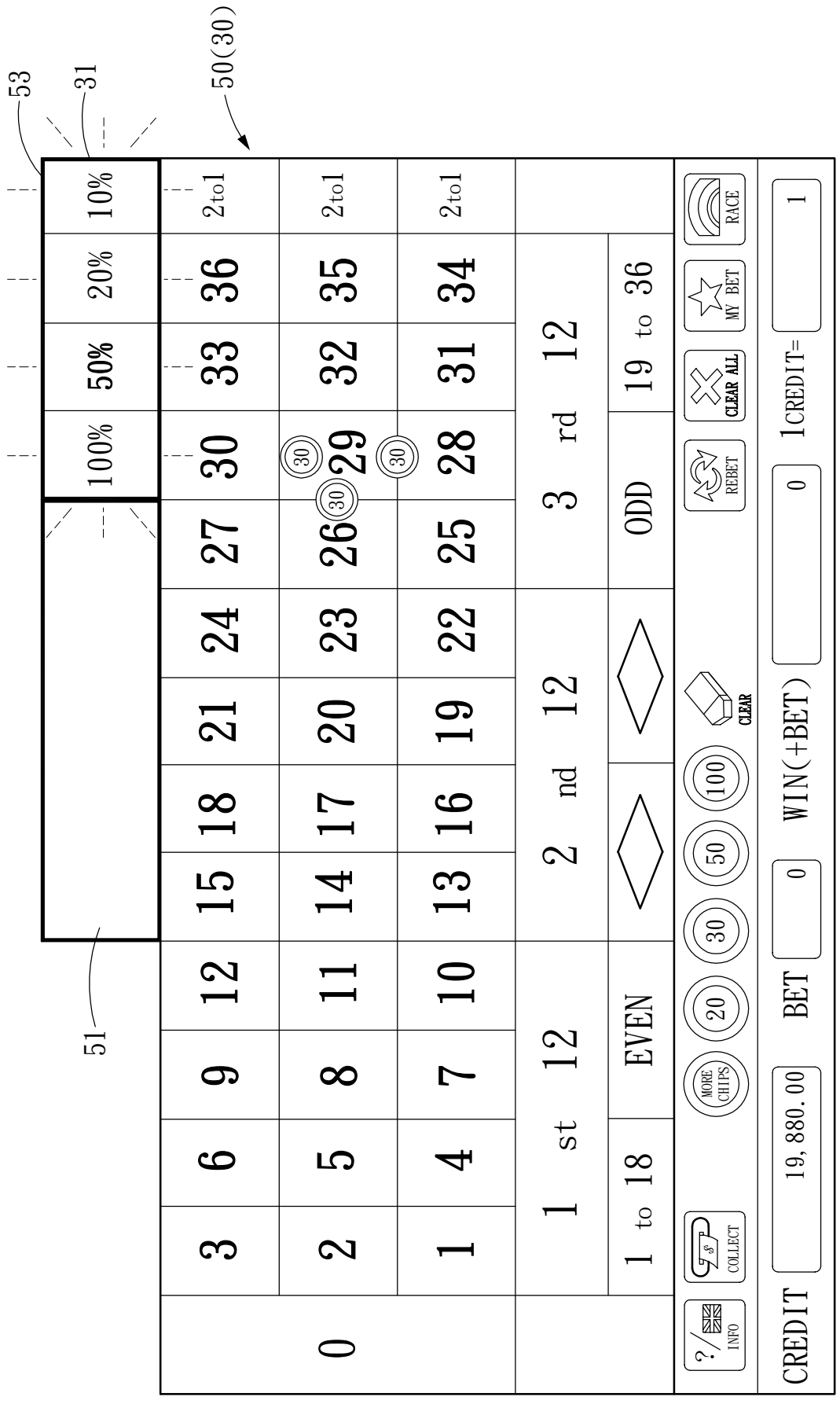
53
31
50(30)
51
100%
50%
20%
10%
2to1
2to1
2to1
0
3 6 9 12 15 18 21 24 27 30 33 36
2 5 8 11 14 17 20 23 26 29 32 35
1 4 7 10 13 16 19 22 25 28 31 34
1 st 12
2 nd 12
3 rd 12
1 to 18
EVEN
ODD
19 to 36
INFO
COLLECT
MORE CHIPS
20
30
50
100
CLEAR
REBET
CLEAR ALL
MY BET
RACE
CREDIT
19,880.00
BET
0
WIN(+BET)
0
1CREDIT=
1

Fig. 7A

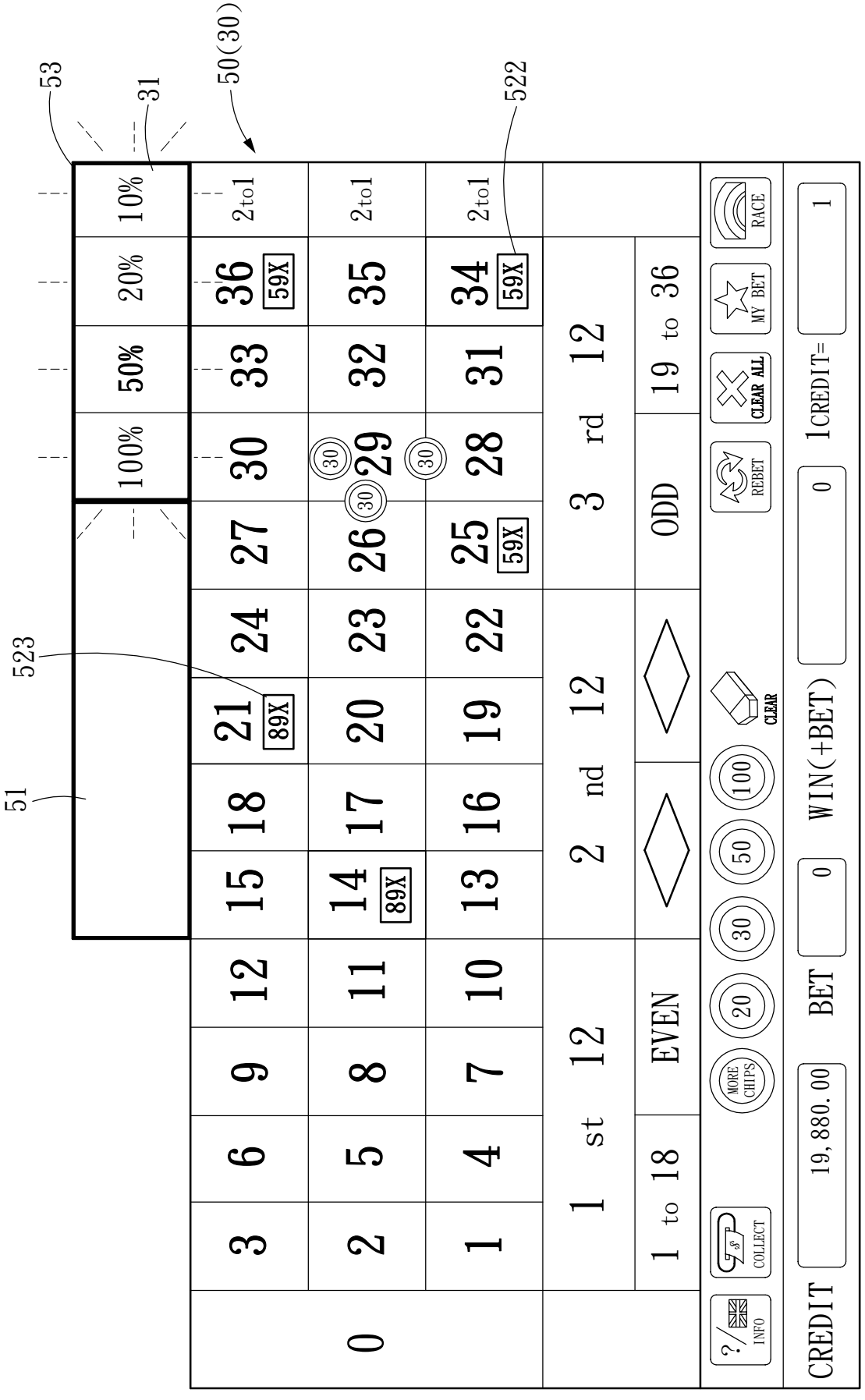
53
31
50(30)
522
523
51
100%
50%
20%
10%
2to1
0
3
6
9
12
15
18
21
24
27
30
33
36
2
5
8
11
14
17
20
23
26
29
32
35
1
4
7
10
13
16
19
22
25
28
31
34
89X
59X
1 st 12
2 nd 12
3 rd 12
1 to 18
EVEN
ODD
19 to 36
INFO
COLLECT
MORE CHIPS
20
30
50
100
CLEAR
REBET
CLEAR ALL
MY BET
RACE
CREDIT
19,880.00
BET
0
WIN(+BET)
0
1CREDIT=
1

Fig. 7B

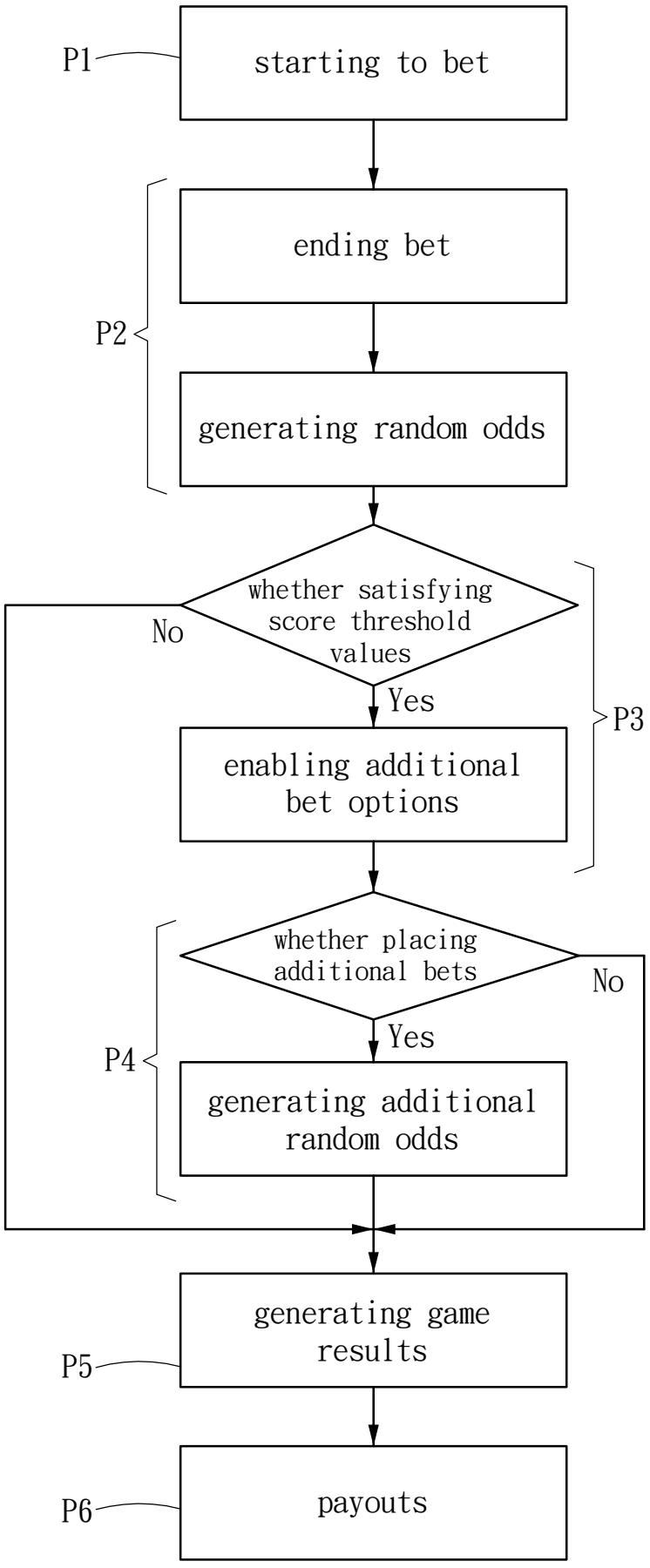
P1
starting to bet
P2
ending bet
generating random odds
whether satisfying score threshold values
No
Yes
P3
enabling additional bet options
whether placing additional bets
No
Yes
P4
generating additional random odds
generating game results
P5
payouts
P6

Fig. 8

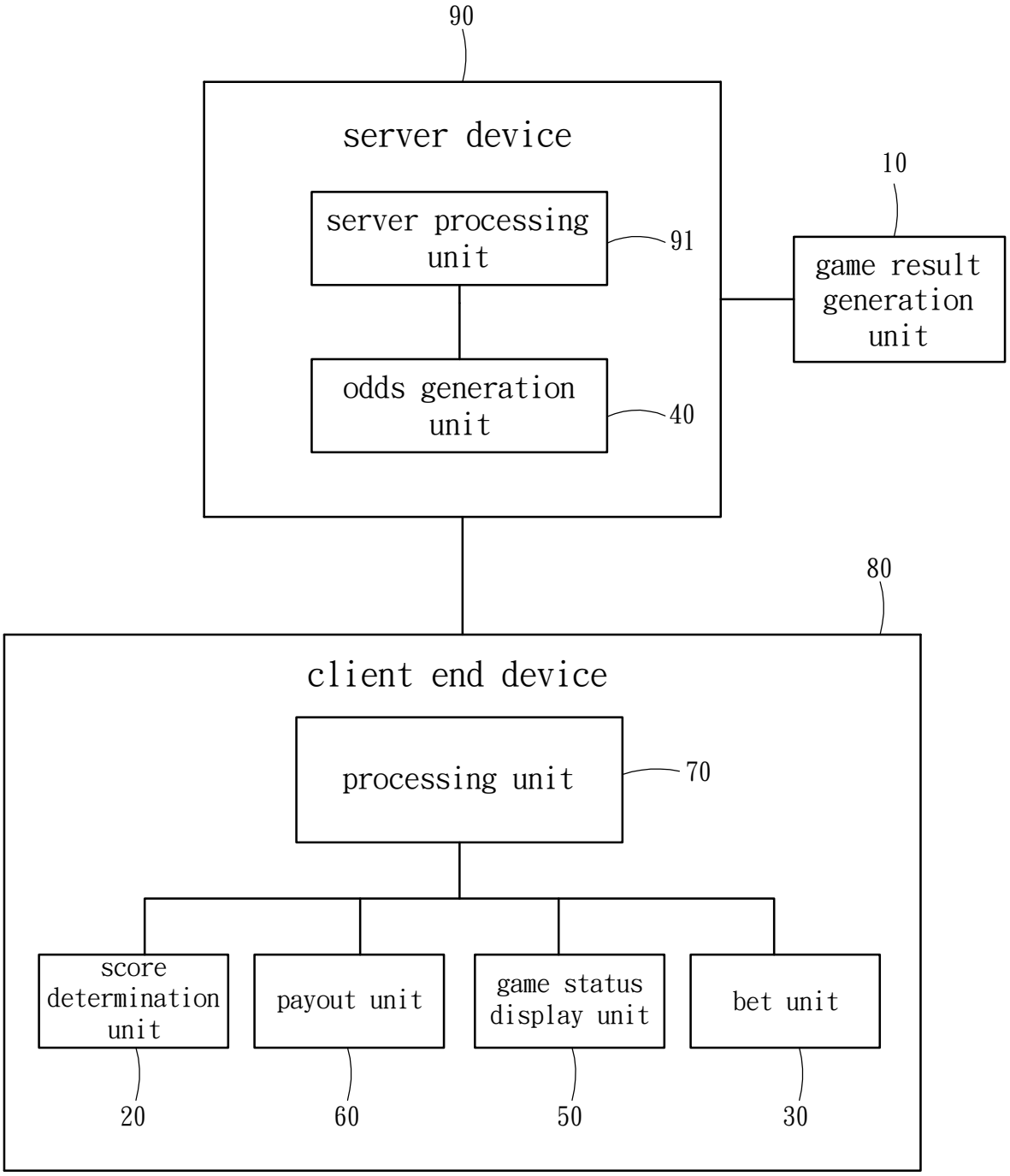
90
server device
server processing unit
91
odds generation unit
40
10
game result generation unit
80
client end device
processing unit
70
score determination unit
20
payout unit
60
game status display unit
50
bet unit
30

Fig. 9

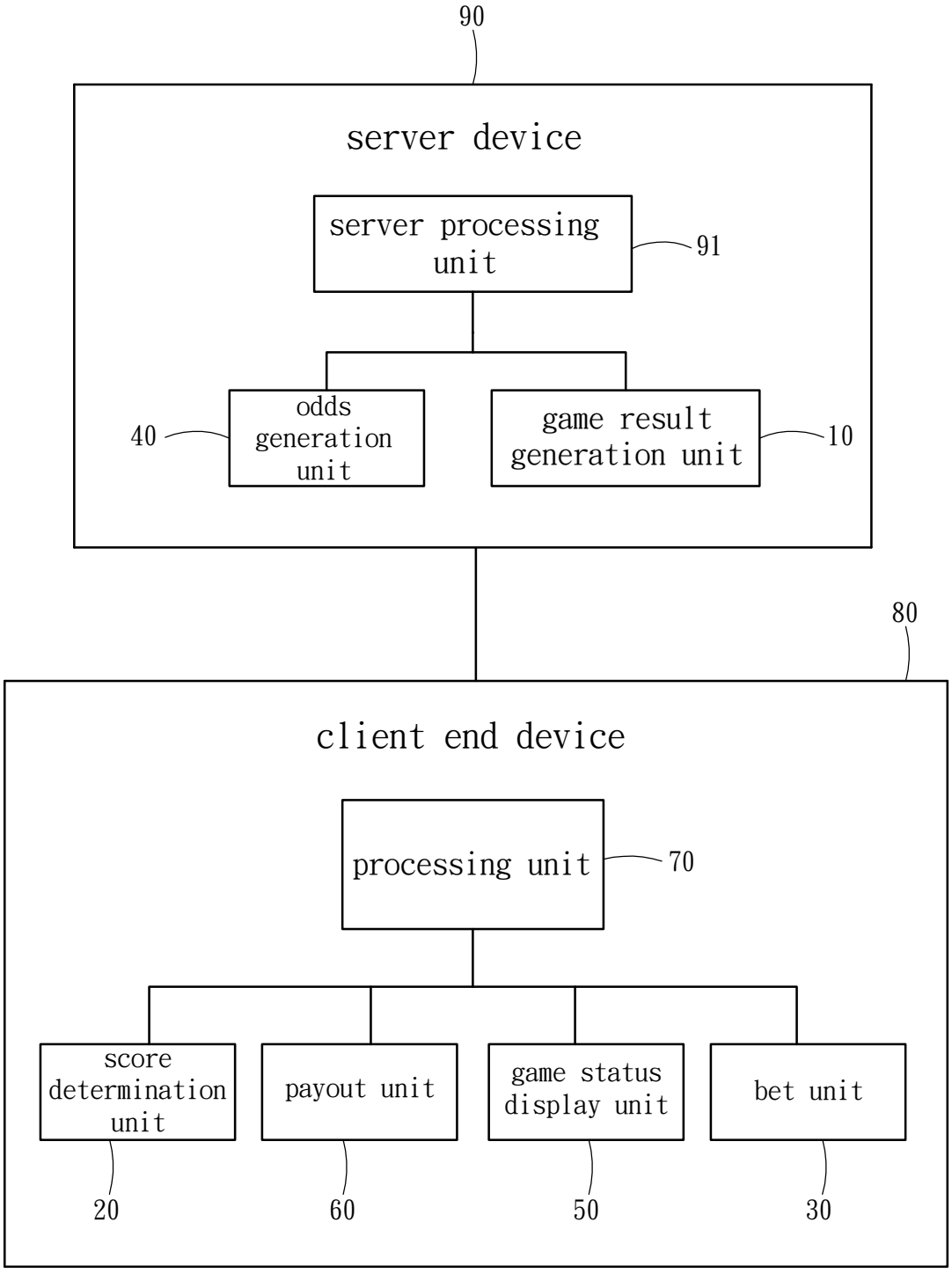
90
server device
server processing unit
91
odds generation unit
40
game result generation unit
10
80
client end device
processing unit
70
score determination unit
payout unit
game status display unit
bet unit
20
60
50
30

Fig. 10