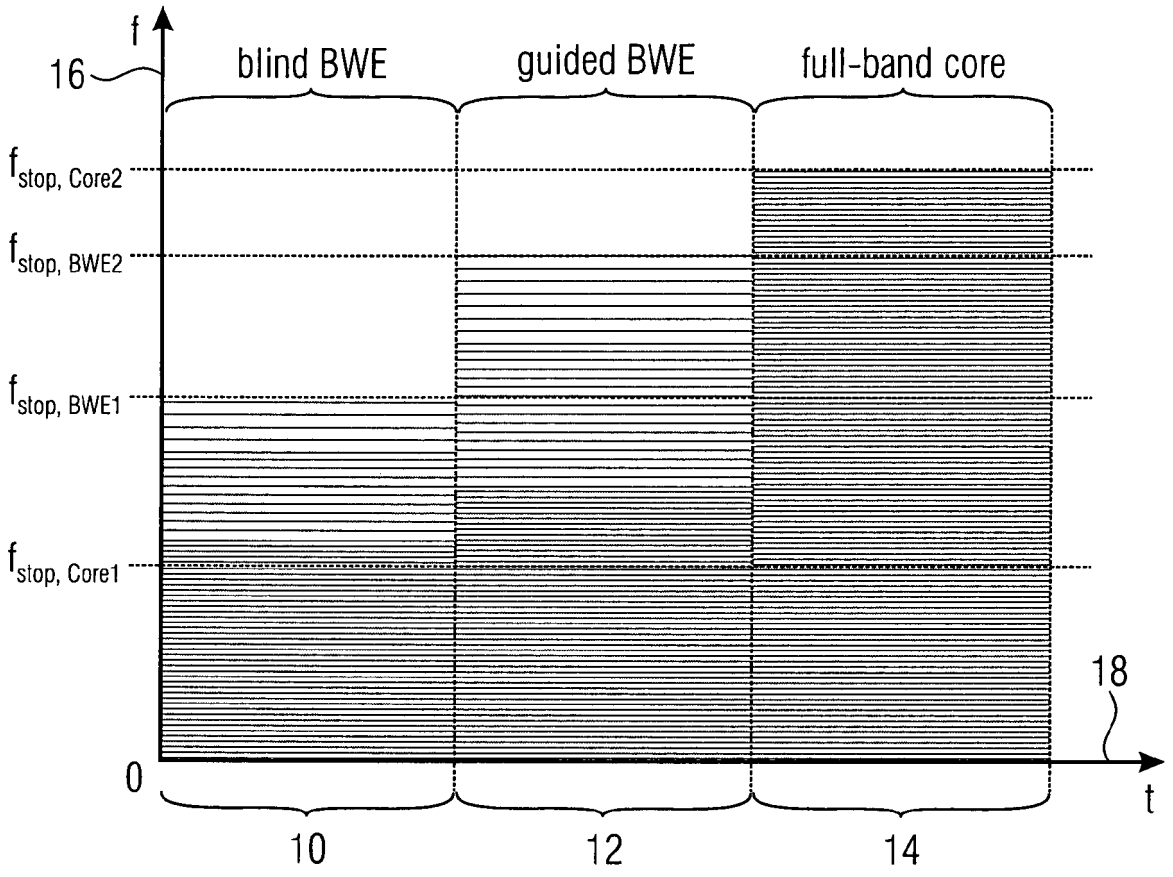
f
16
blind BWE
guided BWE
full-band core
$f_{stop, Core2}$
$f_{stop, BWE2}$
$f_{stop, BWE1}$
$f_{stop, Core1}$
18
0
t
10
12
14

FIG 1

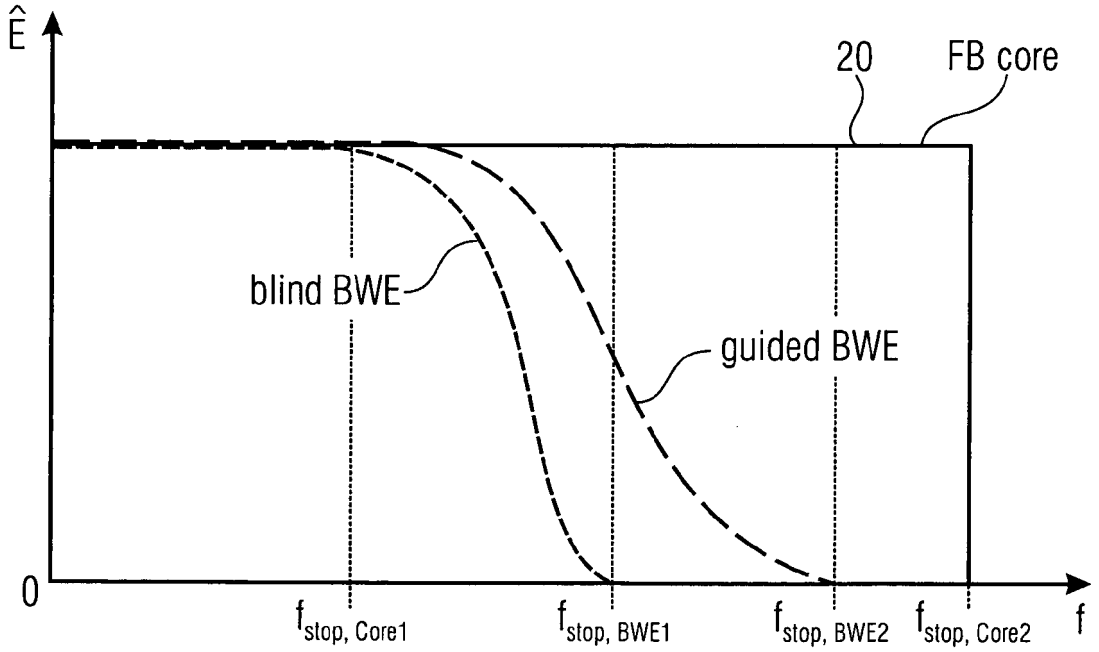
$\hat{E}$
20
FB core
blind BWE
guided BWE
0
$f_{stop, Core1}$
$f_{stop, BWE1}$
$f_{stop, BWE2}$
$f_{stop, Core2}$
f

FIG 2

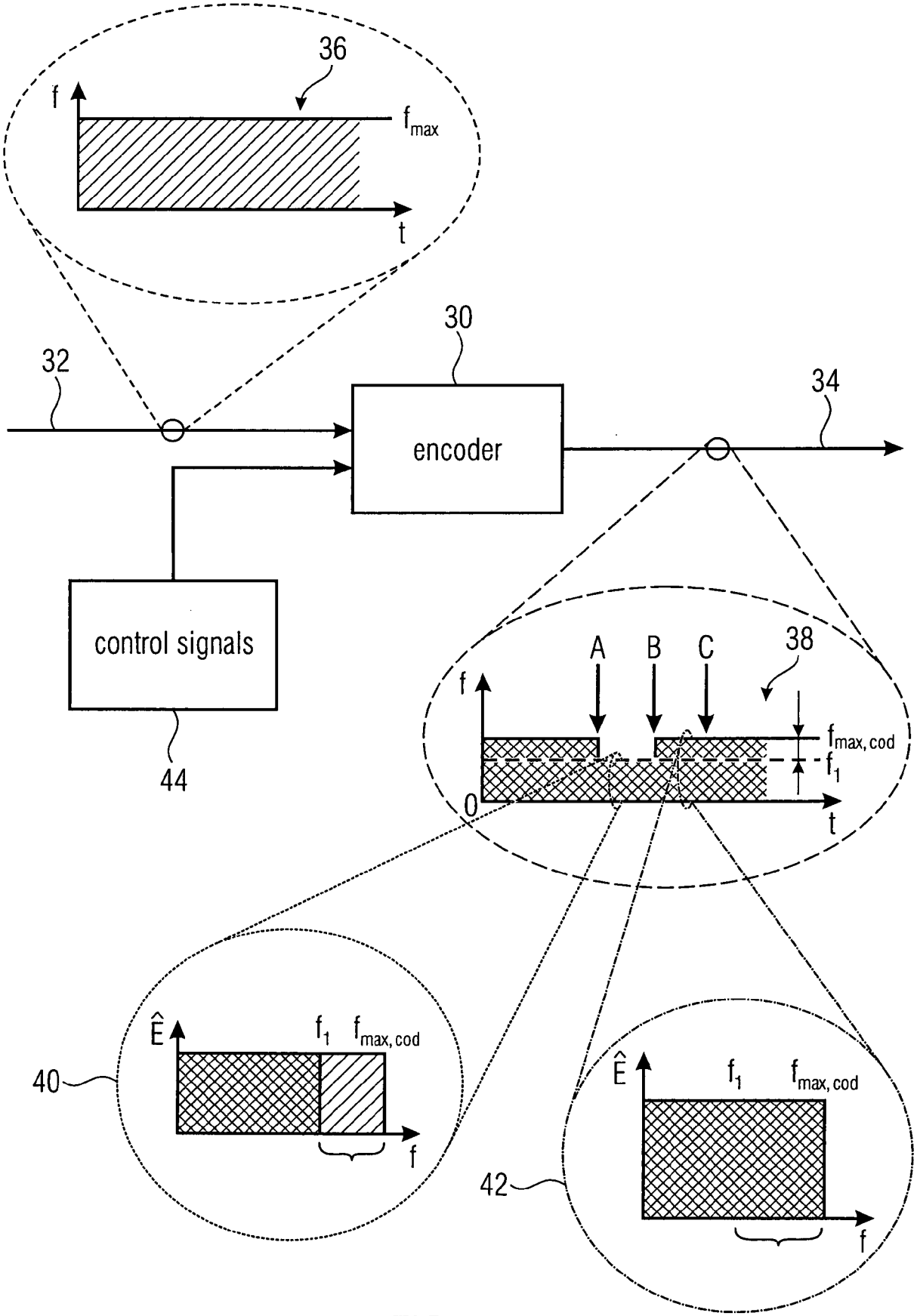
36
f
f_{max}
t
30
32
34
encoder
control signals
44
A
B
C
38
f
$f_{max,cod}$
f_1
0
t
40
$\hat{E}$
f_1
$f_{max,cod}$
f
42
$\hat{E}$
f_1
$f_{max,cod}$
f

FIG 3

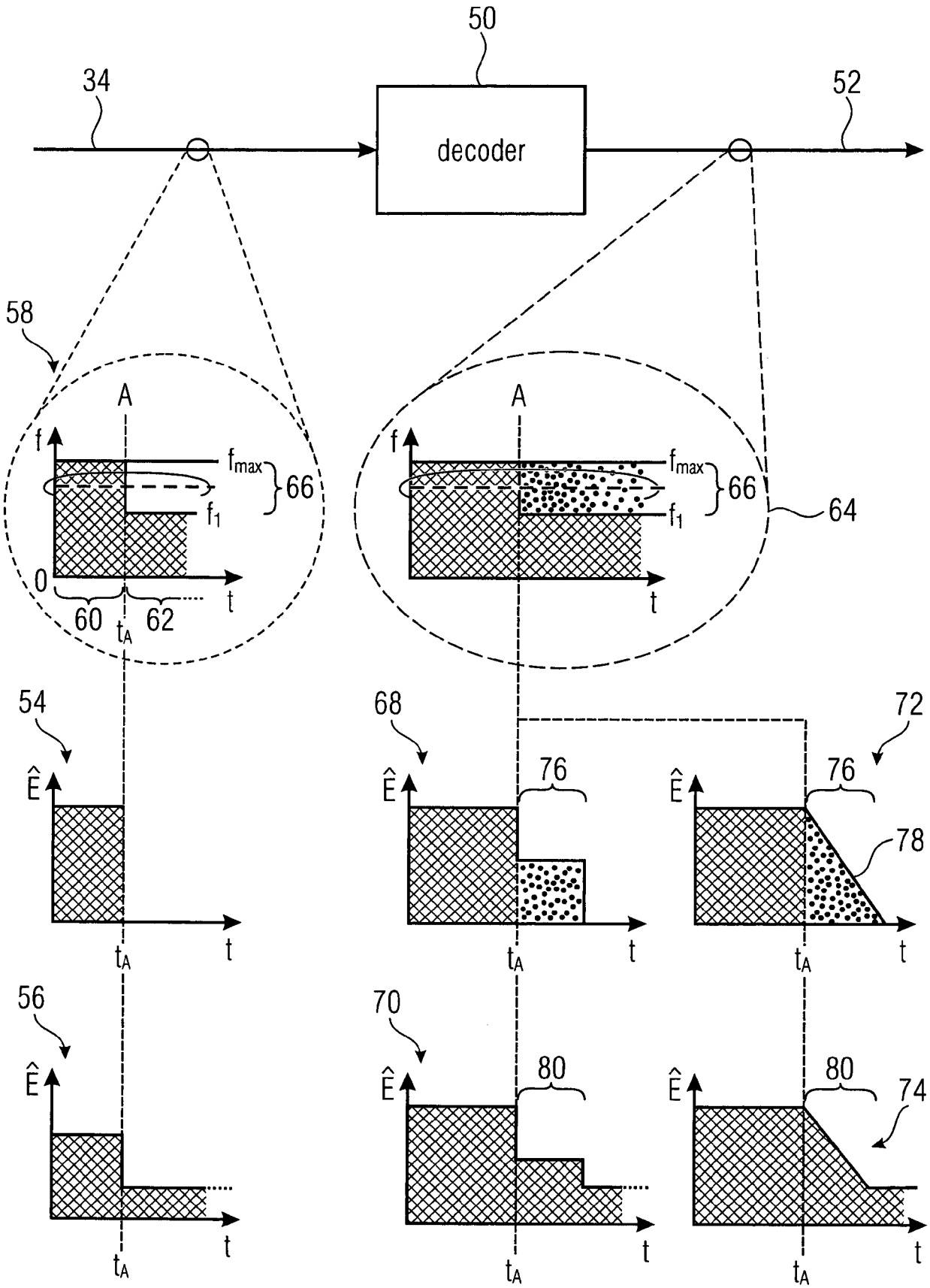
50
34
52
decoder
58
A
f
f_{max}
66
f_1
0
60
t_A
62
t
64
54
68
72
76
78
56
70
80
74
$\hat{E}$

FIG 4

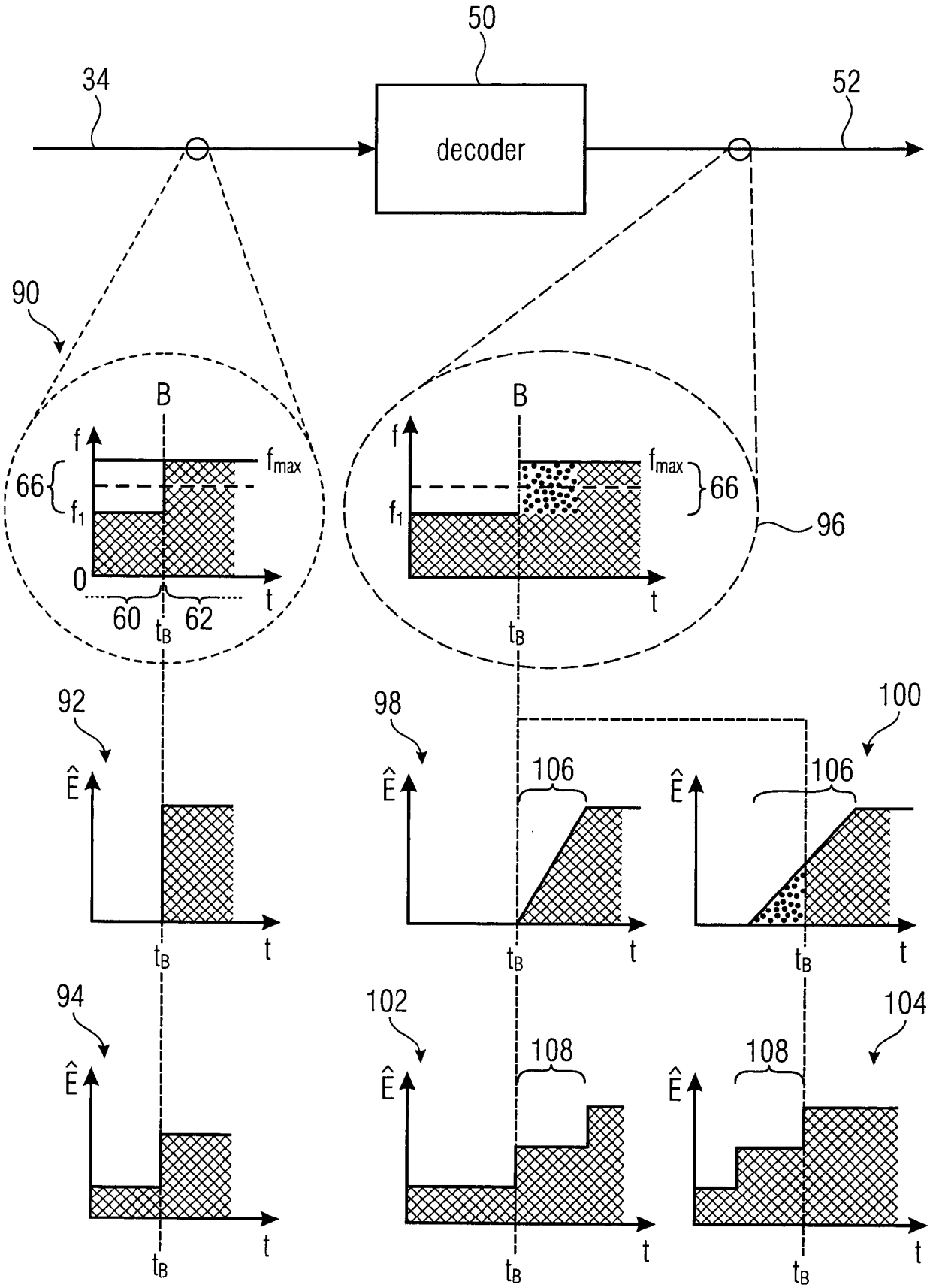
50
34
52
decoder
90
B
f
f_{max}
66
f_1
0
t
60
62
t_B
96
92
98
100
$\hat{E}$
106
94
102
108
104

FIG 5

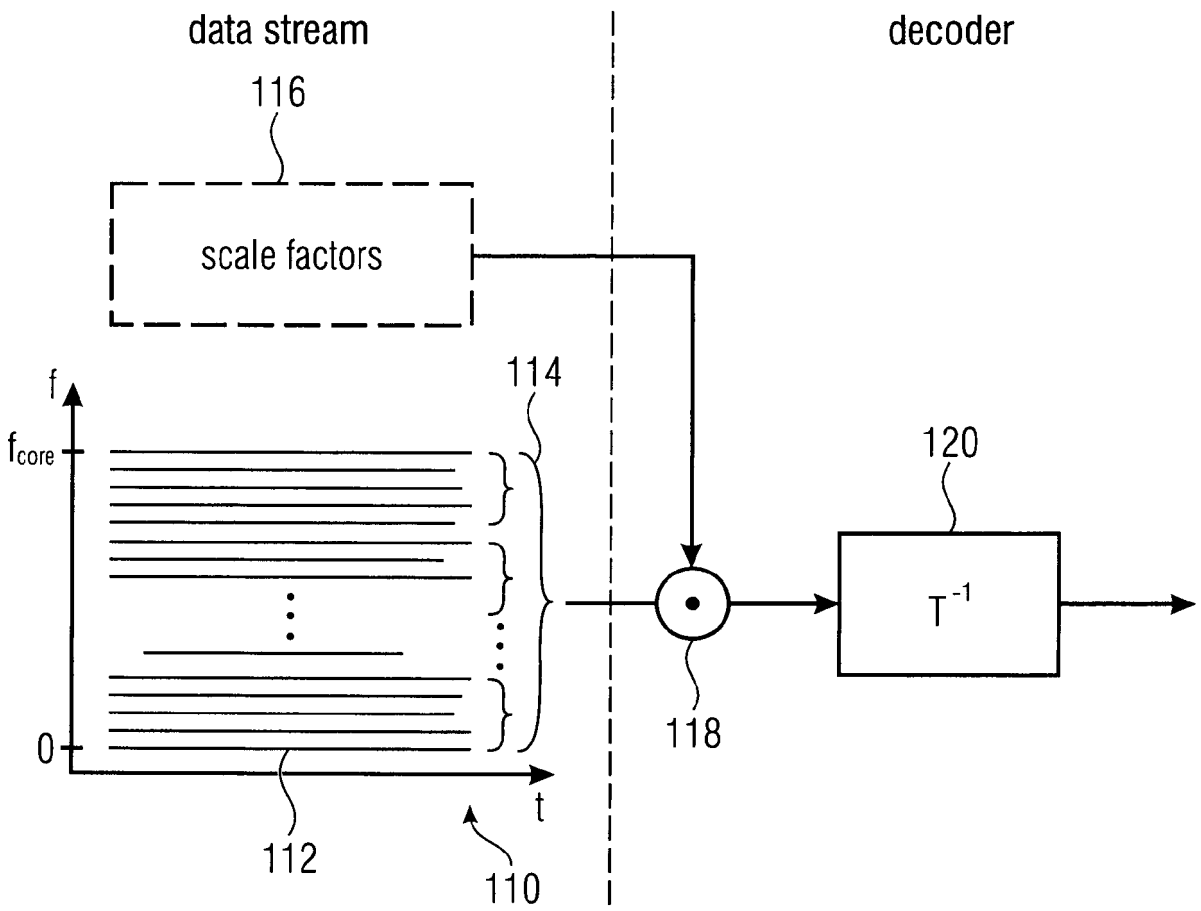
data stream
decoder
116
scale factors
114
f
f_{core}
0
t
112
110
118
120
T^{-1}

FIG 6A

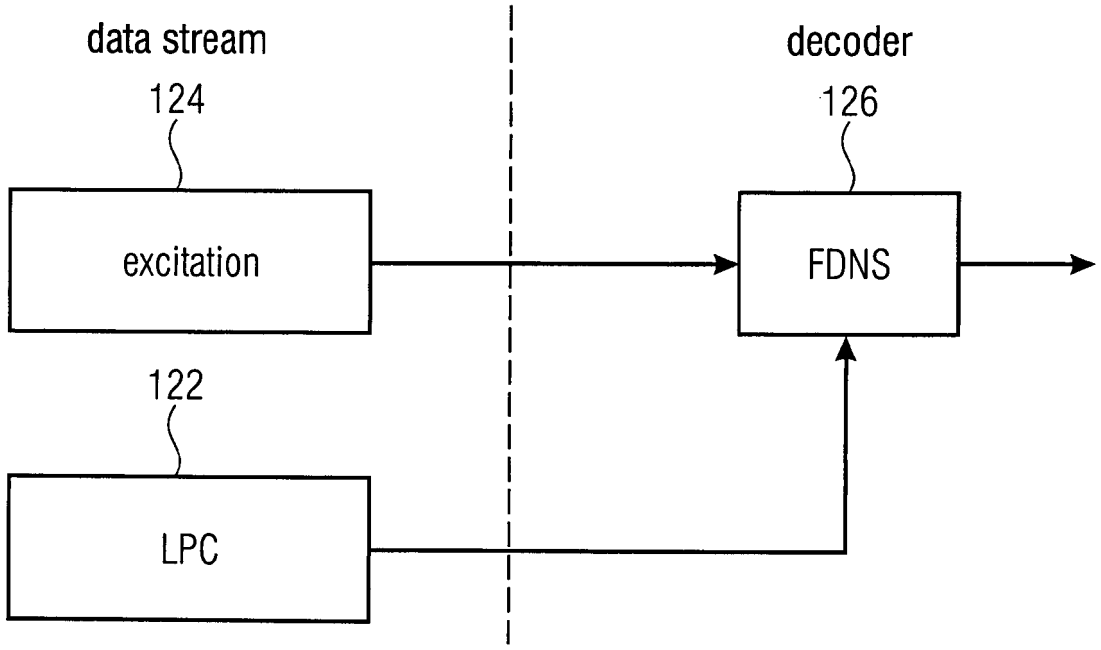
data stream
decoder
124
126
excitation
FDNS
122
LPC

FIG 6B

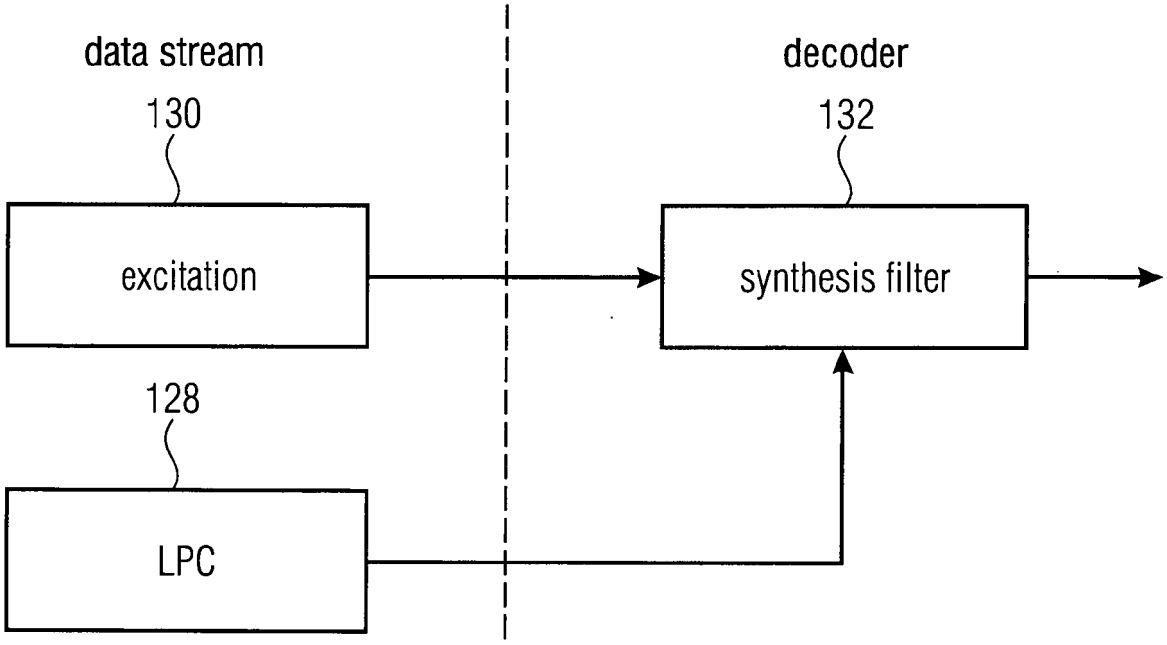
data stream
decoder
130
132
excitation
synthesis filter
128
LPC

FIG 6C

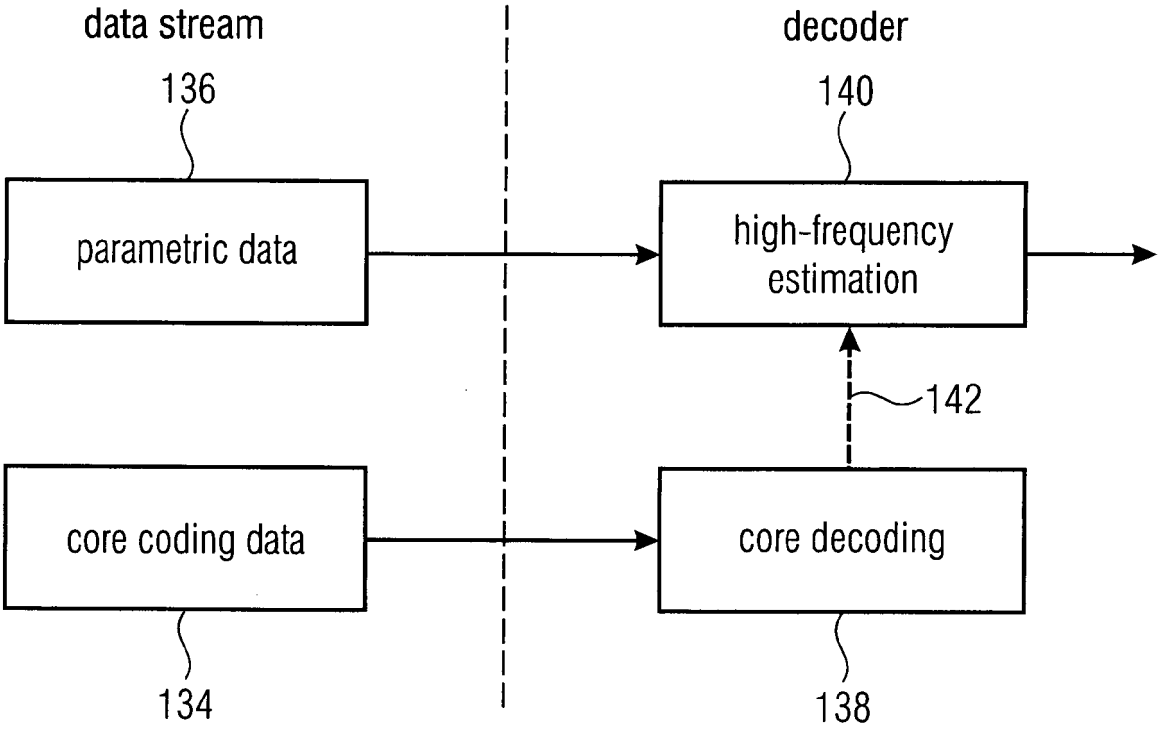
data stream
decoder
136
140
parametric data
high-frequency estimation
142
core coding data
core decoding
134
138

FIG 6D

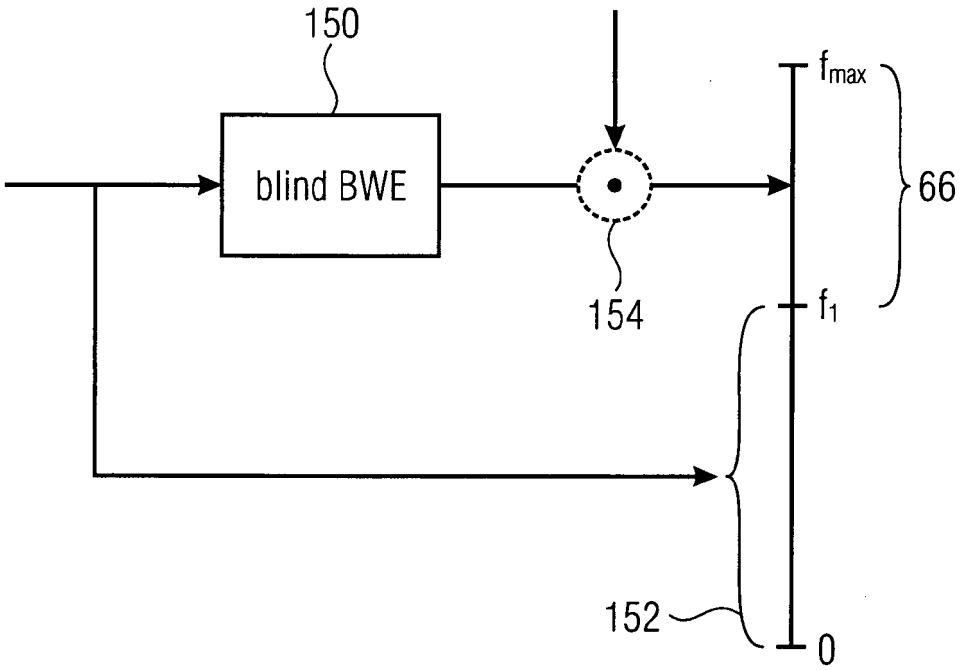
150
blind BWE
154
f_{max}
66
f_1
152
0

FIG 7A

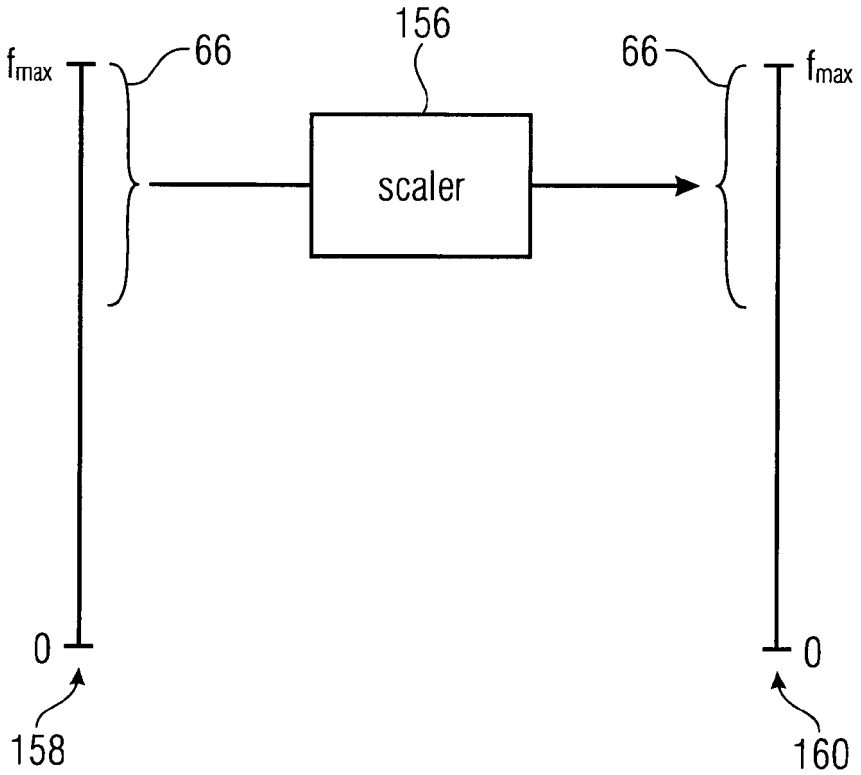
f_{max}
66
156
scaler
66
f_{max}
0
0
158
160

FIG 7B

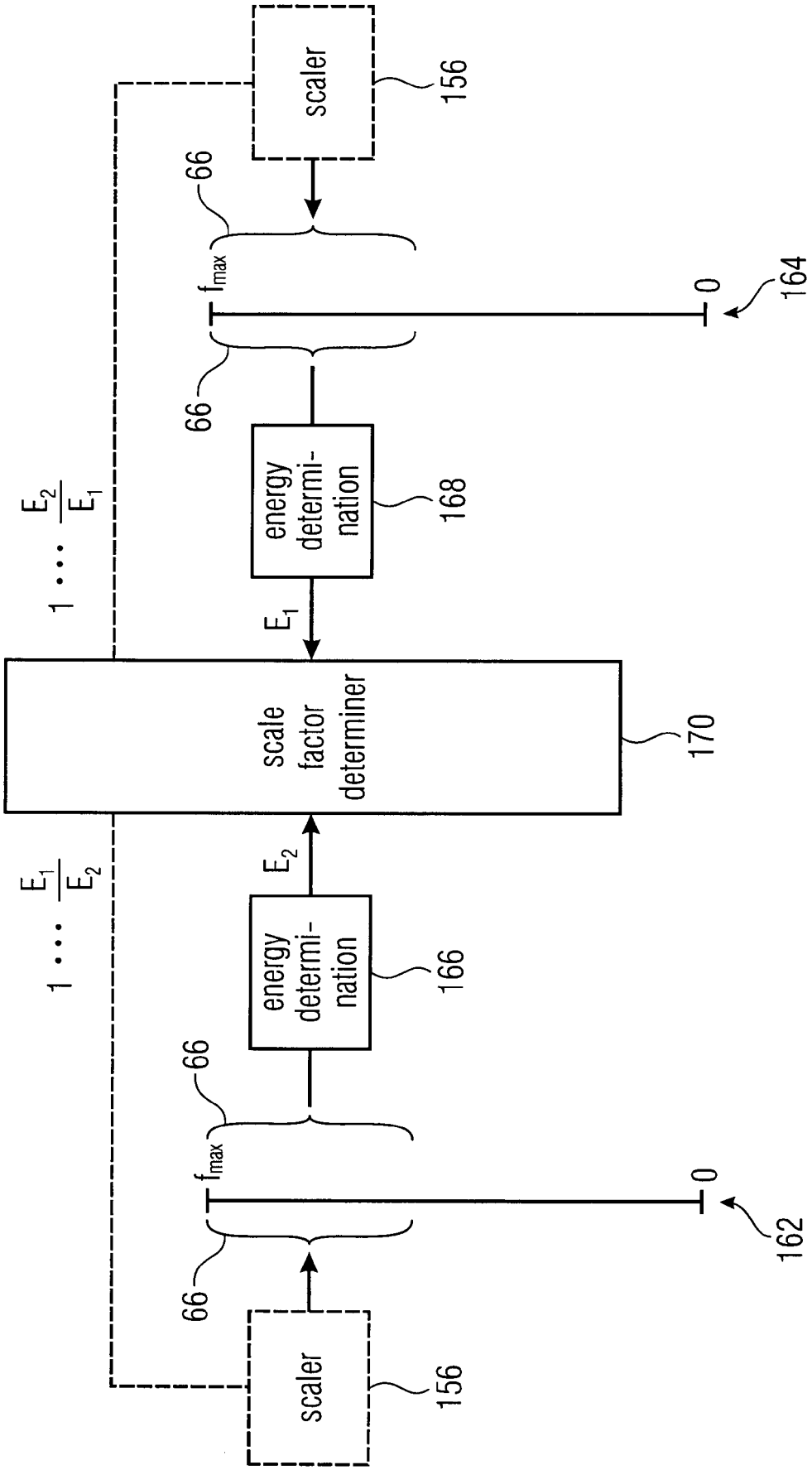
scaler
156
66
f_{max}
0
164
66
energy determi-nation
168
E_1
$1 \cdots \frac{E_2}{E_1}$
scale factor determiner
170
E_2
$1 \cdots \frac{E_1}{E_2}$
energy determi-nation
166
66
f_{max}
0
162
66
scaler
156

FIG 7C

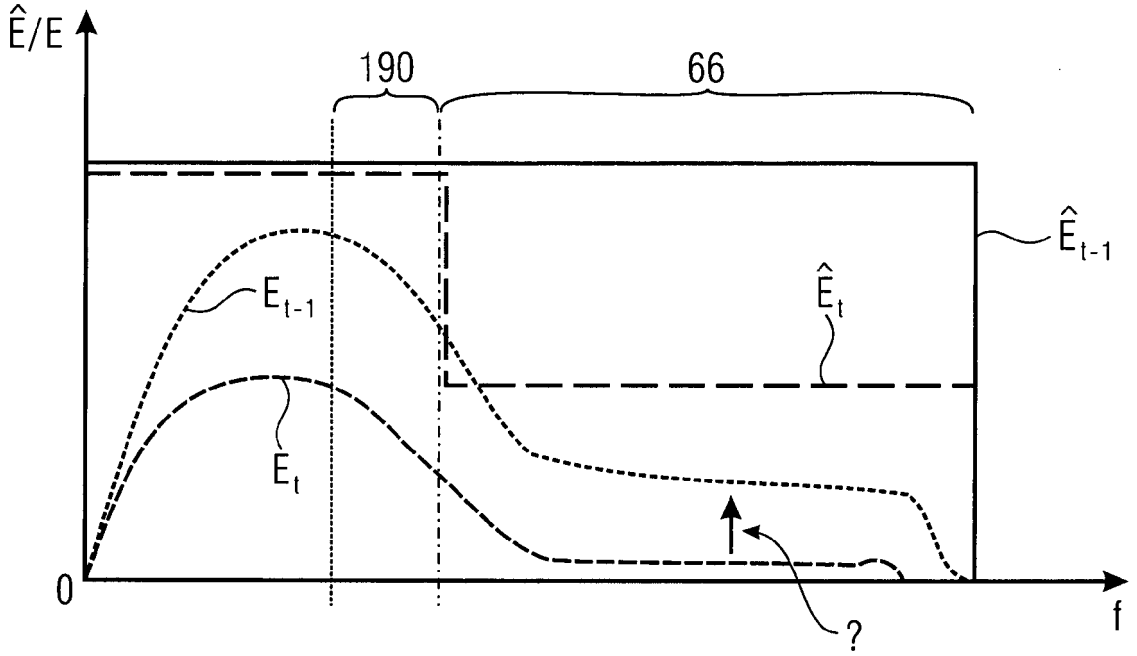
Ê/E
190
66
Ê t-1
E t-1
Ê t
E t
0
?
f

FIG 8

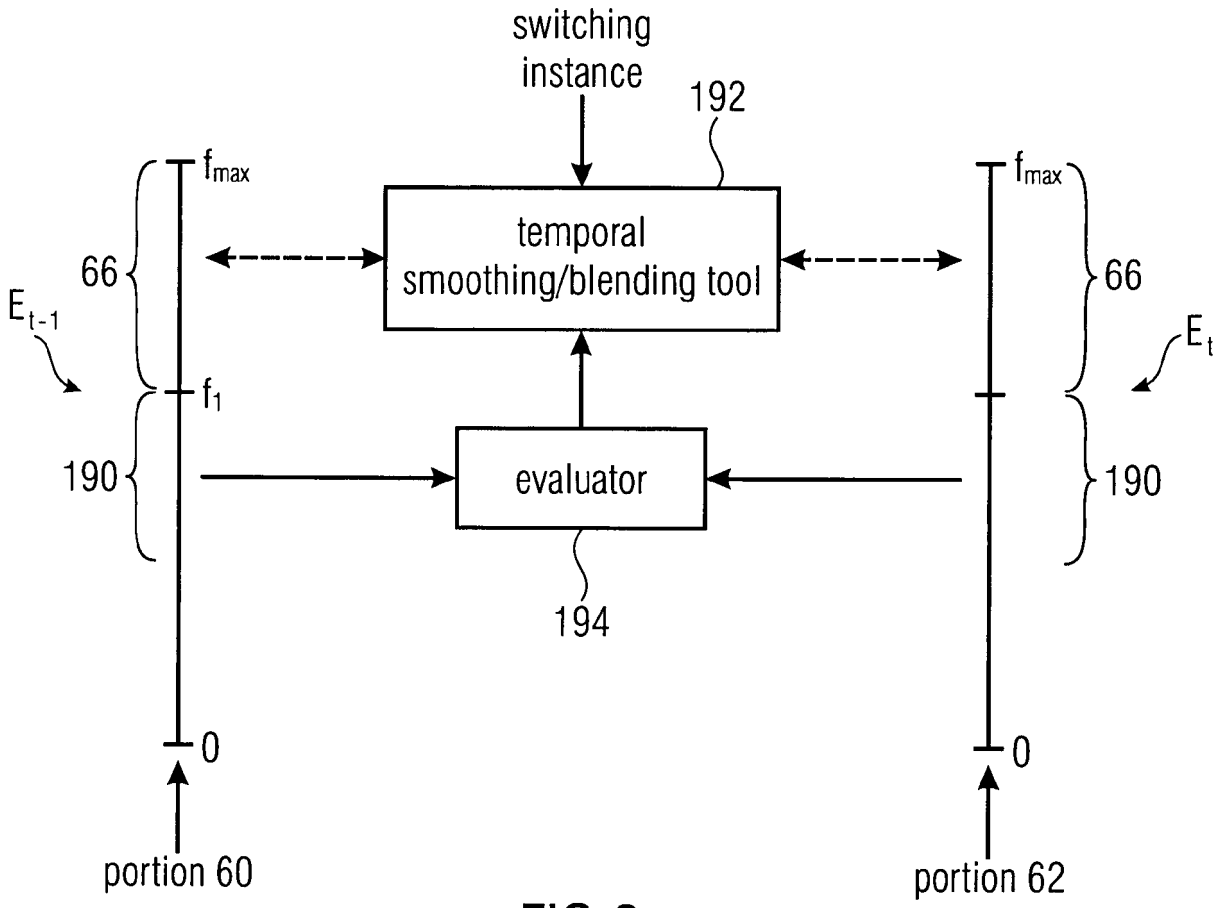
switching instance
192
fmax
temporal smoothing/blending tool
66
E t-1
f1
190
evaluator
194
0
portion 60
portion 62
E t

FIG 9

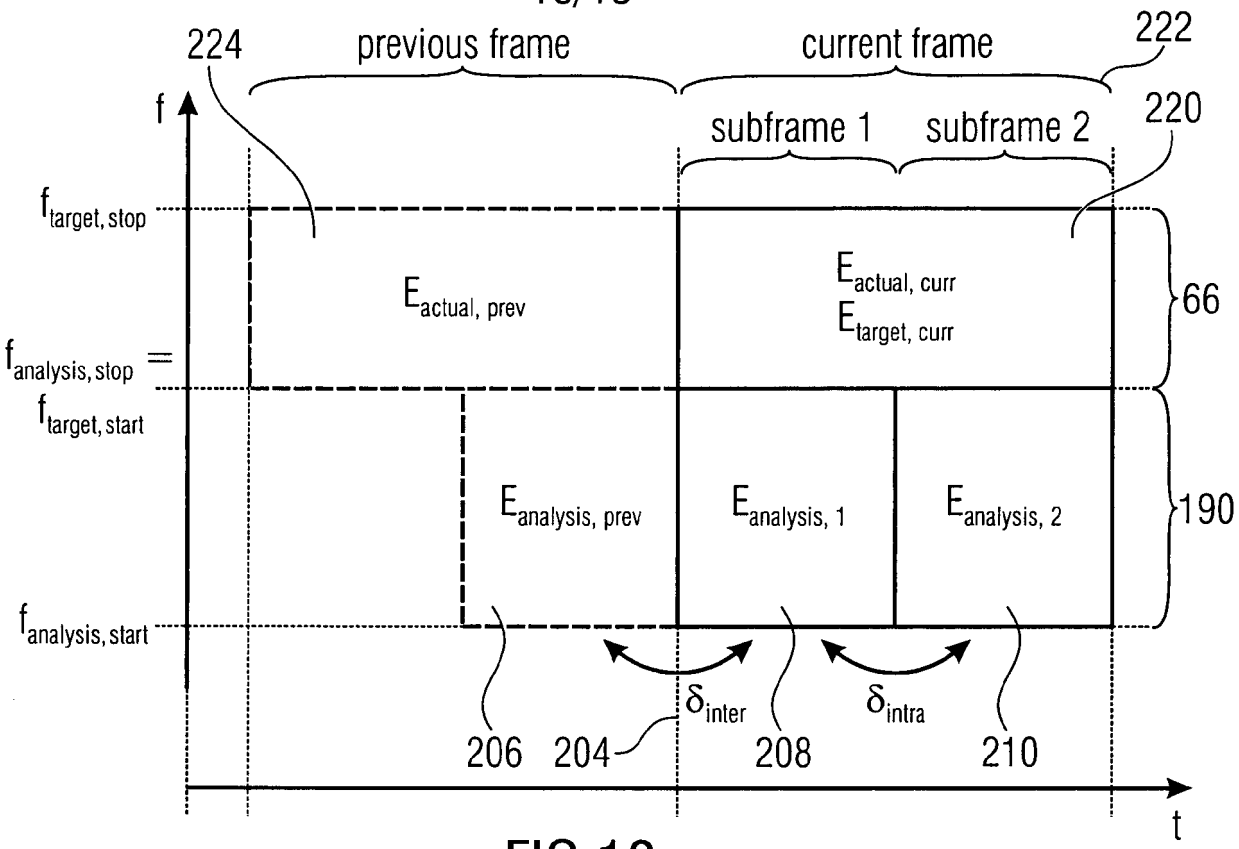
224
previous frame
current frame
222
f
subframe 1
subframe 2
220
$f_{target, stop}$
$E_{actual, prev}$
$E_{actual, curr}$
$E_{target, curr}$
66
$f_{analysis, stop}$ =
$f_{target, start}$
$E_{analysis, prev}$
$E_{analysis, 1}$
$E_{analysis, 2}$
190
$f_{analysis, start}$
δ_{inter}
δ_{intra}
206
204
208
210
t

FIG 10

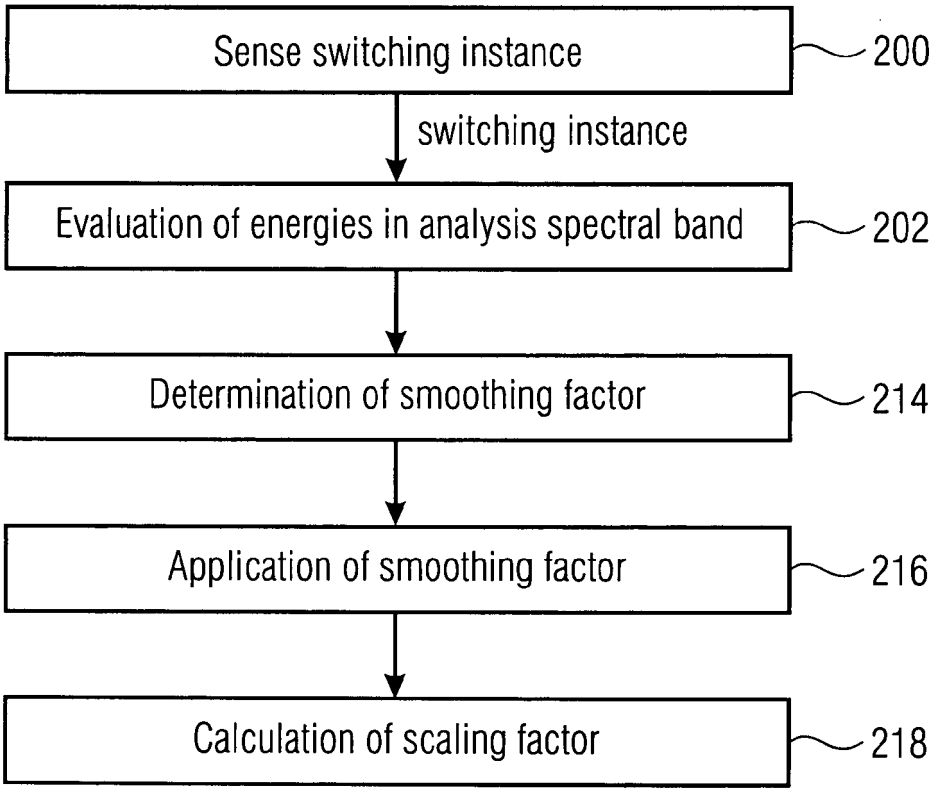
Sense switching instance
200
switching instance
Evaluation of energies in analysis spectral band
202
Determination of smoothing factor
214
Application of smoothing factor
216
Calculation of scaling factor
218

FIG 11

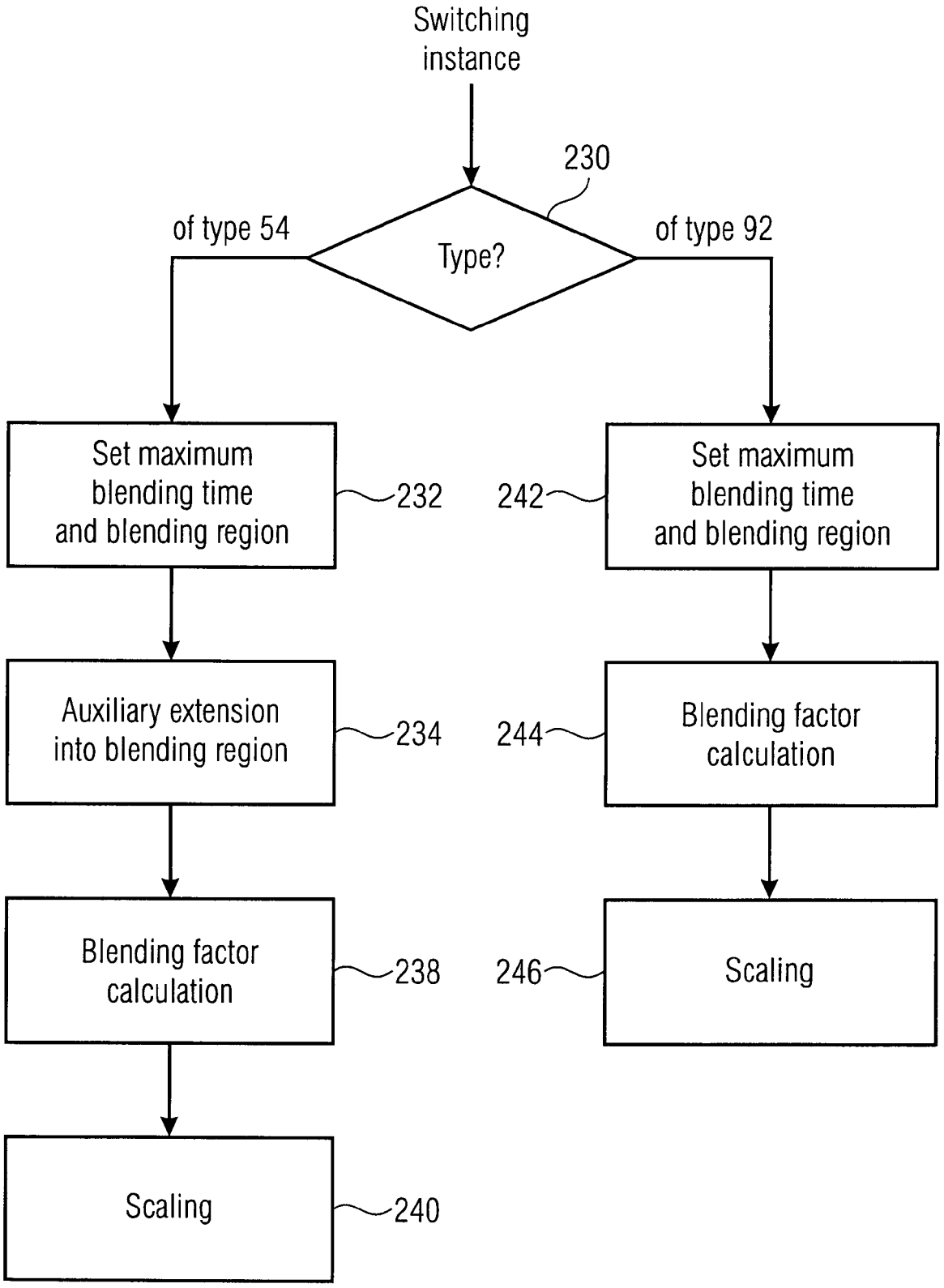
Switching instance
230
Type?
of type 54
of type 92
Set maximum blending time and blending region
232
Auxiliary extension into blending region
234
Blending factor calculation
238
Scaling
240
242
Set maximum blending time and blending region
244
Blending factor calculation
246
Scaling

FIG 12

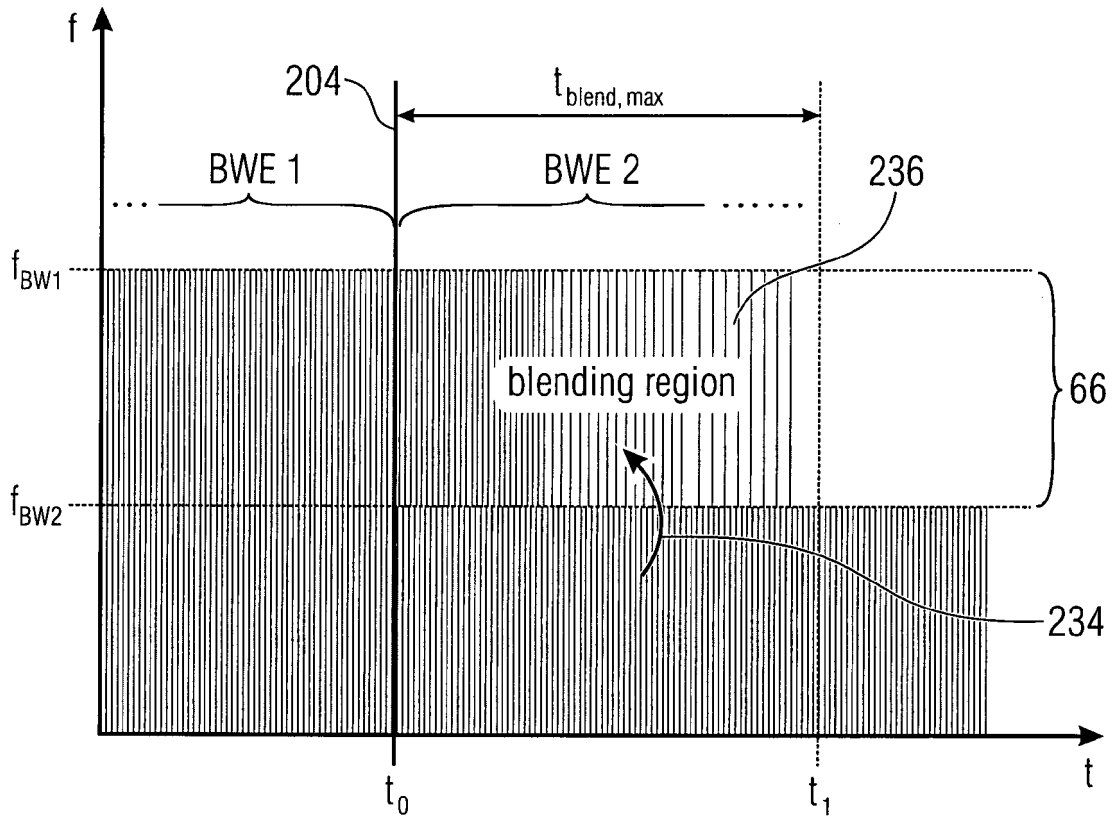

FIG 13A

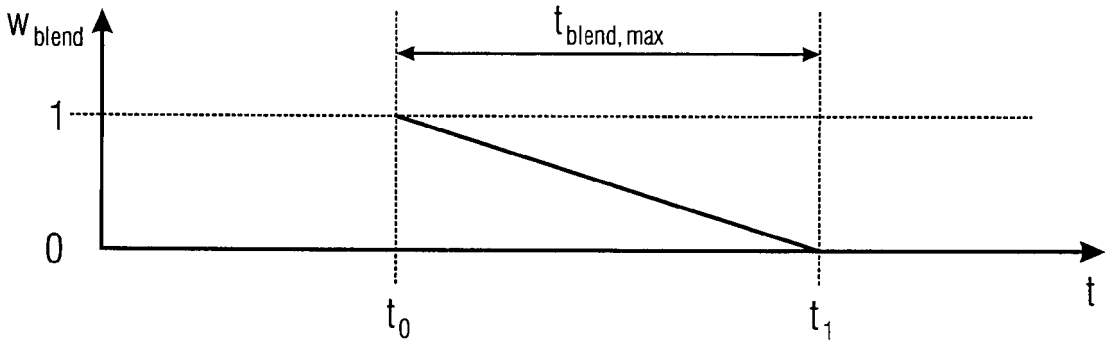

FIG 13B

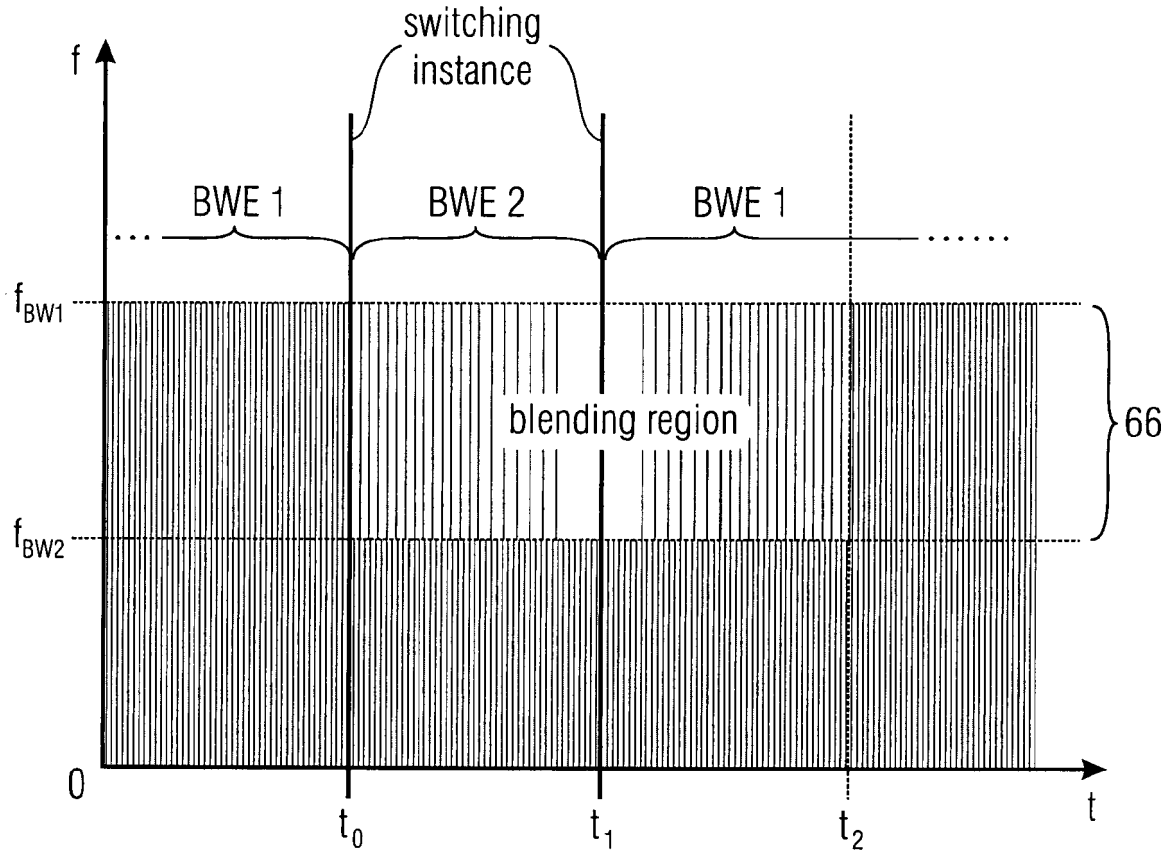

FIG 14A

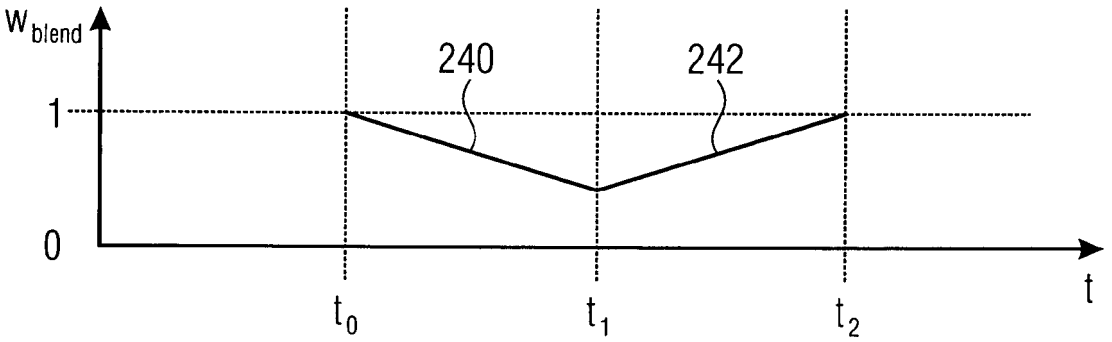

FIG 14B