Figure 1 (Prior Art)

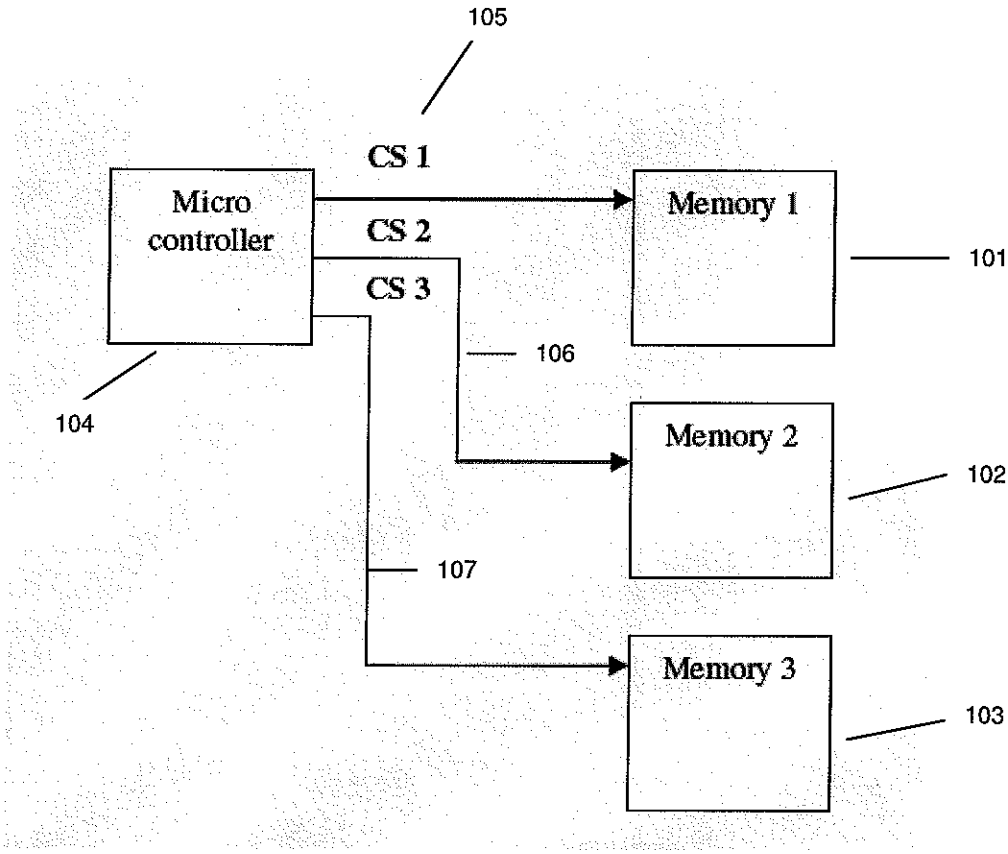

Figure 2

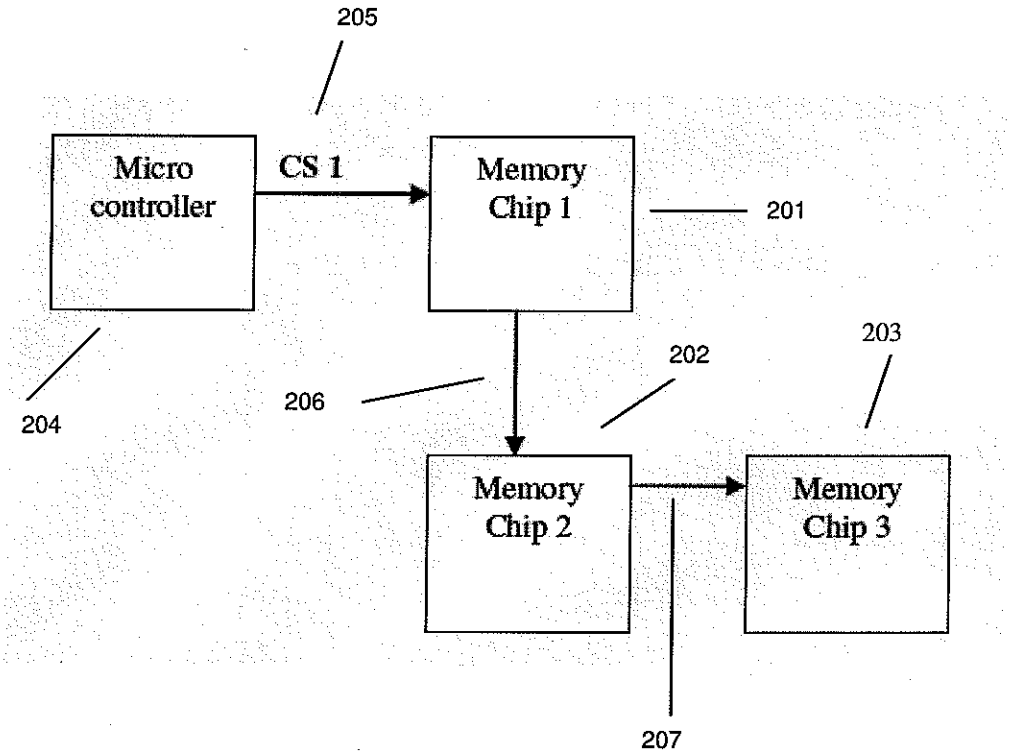
205
Micro controller
CS 1
Memory Chip 1
201
204
206
202
203
Memory Chip 2
Memory Chip 3
207

Figure 3

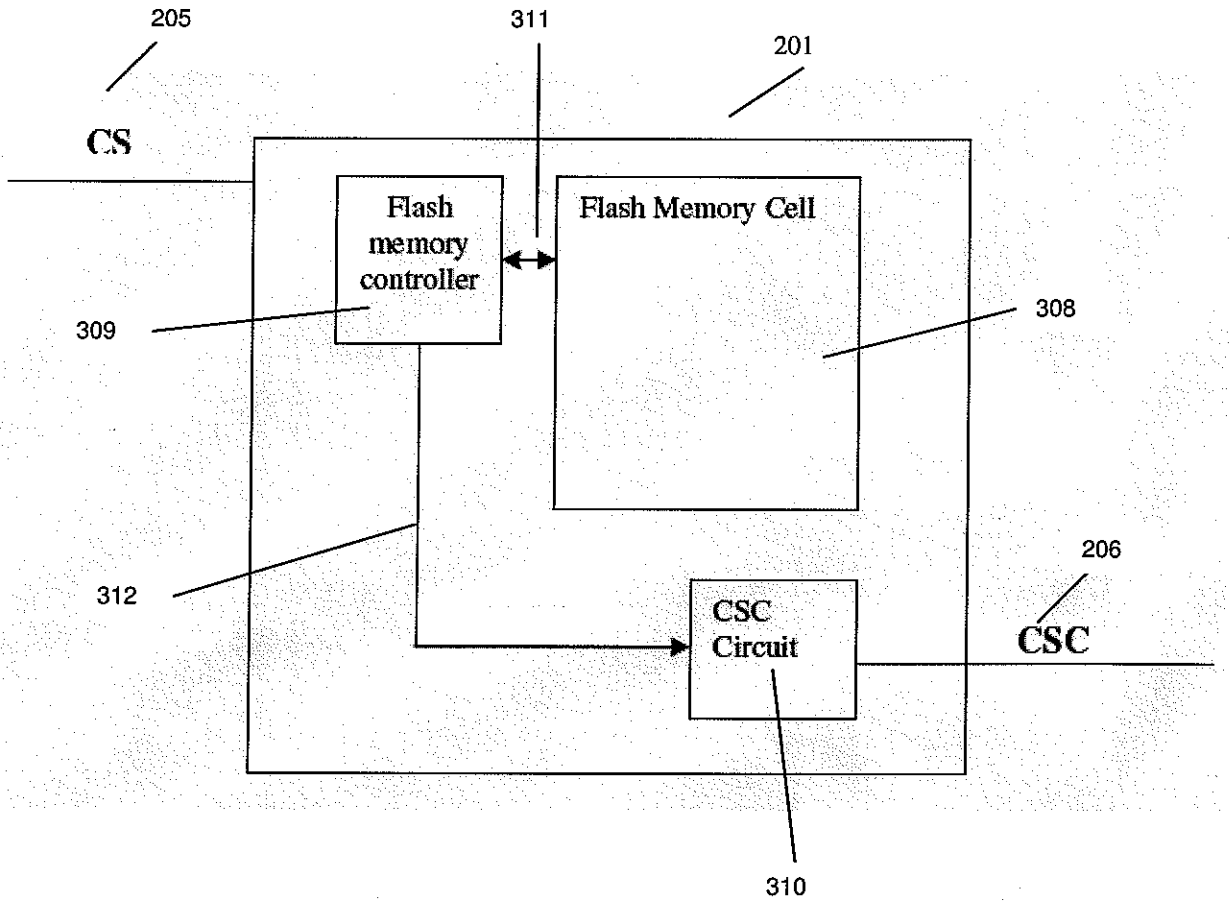
205
311
201
CS
Flash memory controller
Flash Memory Cell
309
308
312
206
CSC Circuit
CSC
310

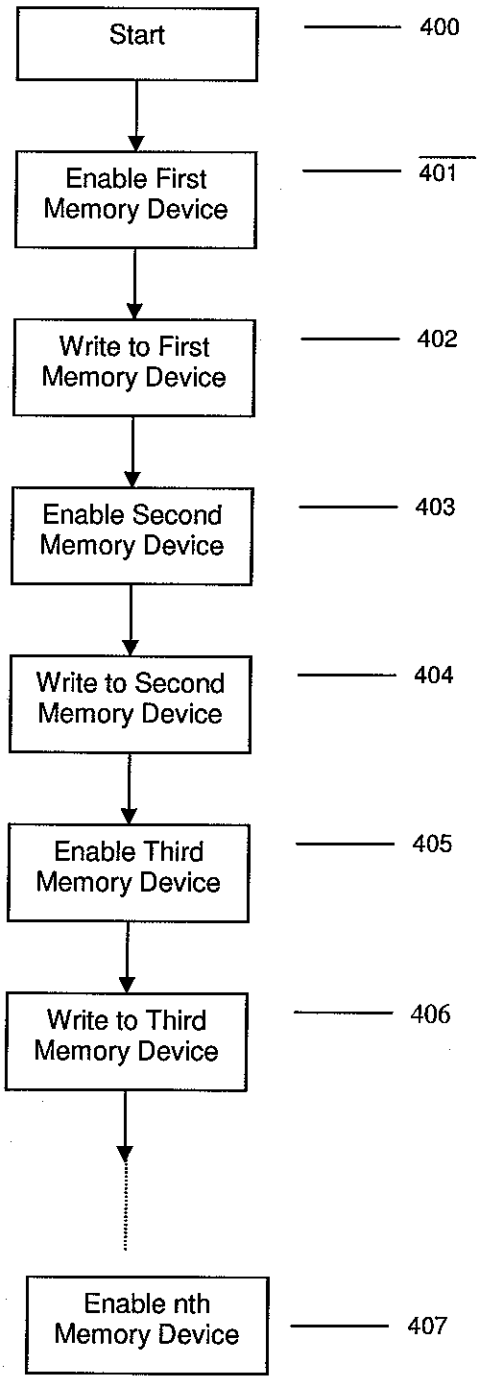
Start
400
Enable First Memory Device
401
Write to First Memory Device
402
Enable Second Memory Device
403
Write to Second Memory Device
404
Enable Third Memory Device
405
Write to Third Memory Device
406
Enable nth Memory Device
407

Figure 4