(12) INTERNATIONAL APPLICATION PUBLISHED UNDER THE PATENT COOPERATION TREATY (PCT)

(19) World Intellectual Property Organization
International Bureau

(43) International Publication Date
18 May 2006 (18.05.2006)

PCT

(10) International Publication Number
WO 2006/050562 A1

(51) International Patent Classification:
*A01K 63/02* (2006.01) *B65D 85/50* (2006.01)

(21) International Application Number:
PCT/AU2005/001714

(22) International Filing Date:
9 November 2005 (09.11.2005)

(25) Filing Language: English

(26) Publication Language: English

(30) Priority Data:
2004906447 9 November 2004 (09.11.2004) AU

(71) Applicant *(for all designated States except US)*: **CONSOLIDATED MARINE PTY LTD** [AU/AU]; 14 Milton Street, Ascot Vale, Victoria 3032 (AU).

(72) Inventor; and
(75) Inventor/Applicant *(for US only)*: **RAYNER, Rodney Leslie** [AU/AU]; 14 Milton Street, Ascot Vale, Victoria 3032 (AU).

(74) Agents: **HENSHAW, Damon** et al.; Davies Collison Cave, 1 Nicholson Street, Melbourne, Victoria 3000 (AU).

(81) Designated States *(unless otherwise indicated, for every kind of national protection available)*: AE, AG, AL, AM, AT, AU, AZ, BA, BB, BG, BR, BW, BY, BZ, CA, CH, CN, CO, CR, CU, CZ, DE, DK, DM, DZ, EC, EE, EG, ES, FI, GB, GD, GE, GH, GM, HR, HU, ID, IL, IN, IS, JP, KE, KG, KM, KN, KP, KR, KZ, LC, LK, LR, LS, LT, LU, LV, LY, MA, MD, MG, MK, MN, MW, MX, MZ, NA, NG, NI, NO, NZ, OM, PG, PH, PL, PT, RO, RU, SC, SD, SE, SG, SK, SL, SM, SY, TJ, TM, TN, TR, TT, TZ, UA, UG, US, UZ, VC, VN, YU, ZA, ZM, ZW.

(84) Designated States *(unless otherwise indicated, for every kind of regional protection available)*: ARIPO (BW, GH, GM, KE, LS, MW, MZ, NA, SD, SL, SZ, TZ, UG, ZM, ZW), Eurasian (AM, AZ, BY, KG, KZ, MD, RU, TJ, TM), European (AT, BE, BG, CH, CY, CZ, DE, DK, EE, ES, FI, FR, GB, GR, HU, IE, IS, IT, LT, LU, LV, MC, NL, PL, PT, RO, SE, SI, SK, TR), OAPI (BF, BJ, CF, CG, CI, CM, GA, GN, GQ, GW, ML, MR, NE, SN, TD, TG).

**Published:**
— *with international search report*

*For two-letter codes and other abbreviations, refer to the "Guidance Notes on Codes and Abbreviations" appearing at the beginning of each regular issue of the PCT Gazette.*

(54) Title: BULK PRODUCE TRANSPORT CONTAINER

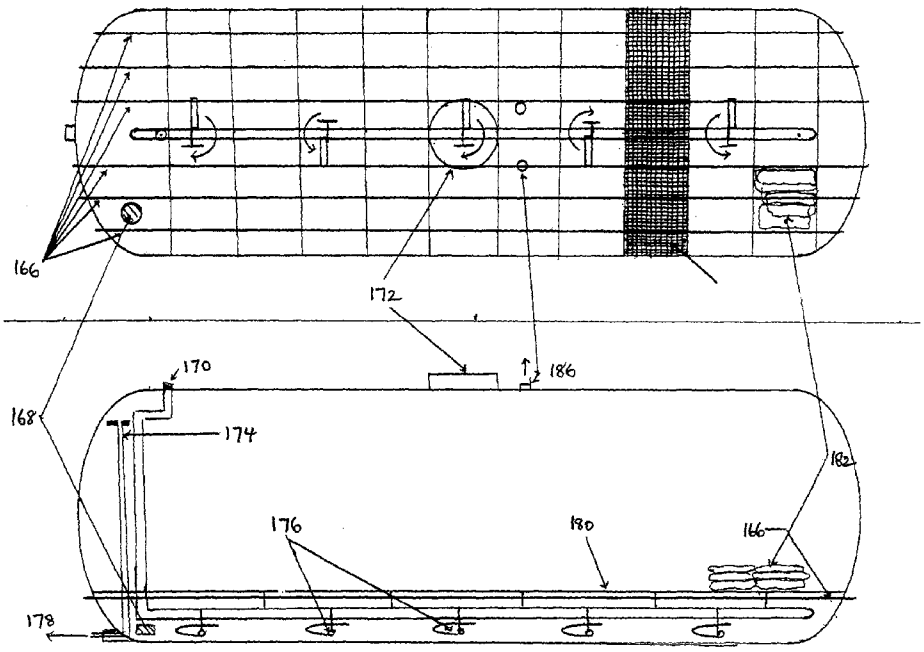


(57) Abstract: A bulk produce transport container (10) including a tank (12) capable of supporting a wet environment, the tank having a storage region for storing produce and distribution conduits through which fluid passes into the storage region and through the produce; a refrigeration system for controlling temperature within the tank; and an assembly (11) through which fluid from the tank is capable of being recycled and filtered.

WO 2006/050562 A1