(12) INTERNATIONAL APPLICATION PUBLISHED UNDER THE PATENT COOPERATION TREATY (PCT)

(19) World Intellectual Property Organization
International Bureau

(43) International Publication Date
13 August 2026 (13.08.2026)

WIPO | PCT

(10) International Publication Number
WO 2026/169128 A2

(51) International Patent Classification:
Not classified

(21) International Application Number:
PCT/MY2026/050033

(22) International Filing Date:
03 April 2026 (03.04.2026)

(25) Filing Language: English

(26) Publication Language: English

(30) Priority Data:
PI2025000903 06 February 2025 (06.02.2025) MY

(71) Applicant: **BILLION PRIMA SDN. BHD.** [MY/MY]; PTB 1587, Jalan Sengkang, Kawasan Perusahaan Sri Sengkang, Kulai, Johor, 81000 (MY).

(72) Inventors: **GOH, Chu Leong**; PTB 1587, Jalan Sengkang, Kawasan Perusahaan Sri Sengkang, Kulai, Johor, 81000 (MY). **LEE, Yuh Jiunn**; PTB 1587, Jalan Sengkang, Kawasan Perusahaan Sri Sengkang, Kulai, Johor, 81000 (MY). **TAN, Heng Kwan**; PTB 1587, Jalan Sengkang, Kawasan Perusahaan Sri Sengkang, Kulai, Johor, 81000 (MY).

(74) Agent: **H A RASHID, Ahmad Fadzlee**; IPVOLUSI Sdn Bhd, A-12-13A, Pinnacle Petaling Jaya, Lorong Utara C, Petaling Jaya, Selangor, 46200 (MY).

(81) Designated States *(unless otherwise indicated, for every kind of national protection available)*: AE, AG, AL, AM, AO, AT, AU, AZ, BA, BB, BG, BH, BN, BR, BW, BY, BZ, CA, CH, CL, CN, CO, CR, CU, CV, CZ, DE, DJ, DK, DM, DO, DZ, EC, EE, EG, ES, FI, GB, GD, GE, GH, GM, GT, HN, HR, HU, ID, IL, IN, IQ, IR, IS, IT, JM, JO, JP, KE, KG, KH, KN, KP, KR, KW, KZ, LA, LC, LK, LR, LS, LU, LY, MA, MD, MG, MK, MN, MU, MW, MX, MY, MZ, NA, NG, NI, NO, NZ, OM, PA, PE, PG, PH, PL, PT, QA, RO, RS, RU, RW, SA, SC, SD, SE, SG, SK, SL, ST, SV, SY, TH, TJ, TM, TN, TR, TT, TZ, UA, UG, US, UY, UZ, VC, VN, WS, ZA, ZM, ZW.

(84) Designated States *(unless otherwise indicated, for every kind of regional protection available)*: ARIPO (BW, CV, GH, GM, KE, LR, LS, MU, MW, MZ, NA, RW, SC, SD, SL, ST, SZ, TZ, UG, ZM, ZW), Eurasian (AM, AZ, BY, KG, KZ, RU, TJ, TM), European (AL, AT, BE, BG, CH, CY, CZ, DE, DK, EE, ES, FI, FR, GB, GR, HR, HU, IE, IS, IT, LT, LU, LV, MC, ME, MK, MT, NL, NO, PL, PT, RO, RS, SE, SI, SK, SM, TR), OAPI (BF, BJ, CF, CG, CI, CM, GA, GN, GQ, GW, KM, ML, MR, NE, SN, TD, TG).

(54) Title: A BAGGAGE SCANNER

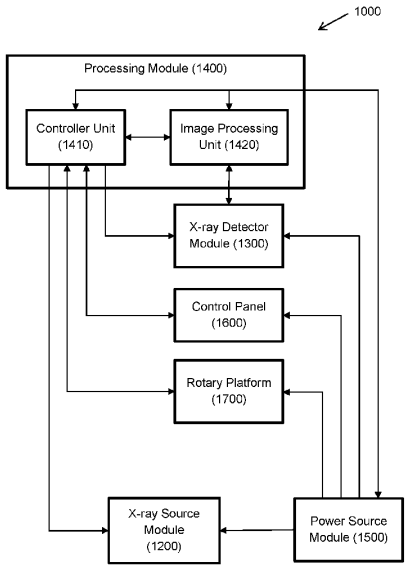

FIG. 3

(57) Abstract: The present invention relates to a baggage scanner (1000) which is a standalone device. The baggage scanner (1000) is configured to scan at least one piece of luggage using X-ray radiation to generate one or more X-ray images of the luggage. The baggage scanner (1000) comprises a housing (1100), an X-ray source module (1200), an X-ray detector module (1300), a processing module (1400), a power source module (1500), and a control panel (1600).

WO 2026/169128 A2

[Continued on next page]

Declarations under Rule 4.17:

— *as to applicant's entitlement to apply for and be granted a patent (Rule 4.17(ii))*
— *of inventorship (Rule 4.17(iv))*

Published:

— *without international search report and to be republished upon receipt of that report (Rule 48.2(g))*
— *with information concerning request for restoration of the right of priority in respect of one or more priority claims (Rules 26bis.3 and 48.2(b)(vii))*