(12) INTERNATIONAL APPLICATION PUBLISHED UNDER THE PATENT COOPERATION TREATY (PCT)

(19) World Intellectual Property Organization
International Bureau

(43) International Publication Date
23 July 2009 (23.07.2009)

PCT

(10) International Publication Number
WO 2009/091579 A1

(51) International Patent Classification:
H01L 27/115 (2006.01) *H01L 29/872* (2006.01)
H01L 21/8247 (2006.01)

(21) International Application Number:
PCT/US2009/000274

(22) International Filing Date: 16 January 2009 (16.01.2009)

(25) Filing Language: English

(26) Publication Language: English

(30) Priority Data:
12/014,939 16 January 2008 (16.01.2008) US

(71) Applicant *(for all designated States except US)*: **MICRON TECHNOLOGY, INC.** [US/US]; 8000 So. Federal Way, Boise, Idaho 83716-9632 (US).

(72) Inventors; and
(75) Inventors/Applicants *(for US only)*: **LIU, Jun** [CN/US]; 1033 S. Dale Apt. #203, Boise, Idaho 83706 (US). **VIOLETTE, Michael P.** [US/US]; 1088 East Fleetwood Court, Boise, Idaho 83706 (US).

(74) Agent: **STEFFEY, Charles E.**; Schwegman, Lundberg, & Woessner, P.A., P.O. Box 2938, Minneapolis, Minnesota 55402-0938 (US).

(81) Designated States *(unless otherwise indicated, for every kind of national protection available)*: AE, AG, AL, AM, AO, AT, AU, AZ, BA, BB, BG, BH, BR, BW, BY, BZ, CA, CH, CN, CO, CR, CU, CZ, DE, DK, DM, DO, DZ, EC, EE, EG, ES, FI, GB, GD, GE, GH, GM, GT, HN, HR, HU, ID, IL, IN, IS, JP, KE, KG, KM, KN, KP, KR, KZ, LA, LC, LK, LR, LS, LT, LU, LY, MA, MD, ME, MG, MK, MN, MW, MX, MY, MZ, NA, NG, NI, NO, NZ, OM, PG, PH, PL, PT, RO, RS, RU, SC, SD, SE, SG, SK, SL, SM, ST, SV, SY, TJ, TM, TN, TR, TT, TZ, UA, UG, US, UZ, VC, VN, ZA, ZM, ZW.

(84) Designated States *(unless otherwise indicated, for every kind of regional protection available)*: ARIPO (BW, GH, GM, KE, LS, MW, MZ, NA, SD, SL, SZ, TZ, UG, ZM, ZW), Eurasian (AM, AZ, BY, KG, KZ, MD, RU, TJ, TM), European (AT, BE, BG, CH, CY, CZ, DE, DK, EE, ES, FI, FR, GB, GR, HR, HU, IE, IS, IT, LT, LU, LV, MC, MK, MT, NL, NO, PL, PT, RO, SE, SI, SK, TR), OAPI (BF, BJ, CF, CG, CI, CM, GA, GN, GQ, GW, ML, MR, NE, SN, TD, TG).

Published:
— *with international search report*
— *before the expiration of the time limit for amending the claims and to be republished in the event of receipt of amendments*

(54) **Title:** 3-D AND 3-D SCHOTTKY DIODE FOR CROSS-POINT, VARIABLE-RESISTANCE MATERIAL MEMORIES, PROCESSES OF FORMING SAME, AND METHODS OF USING SAME

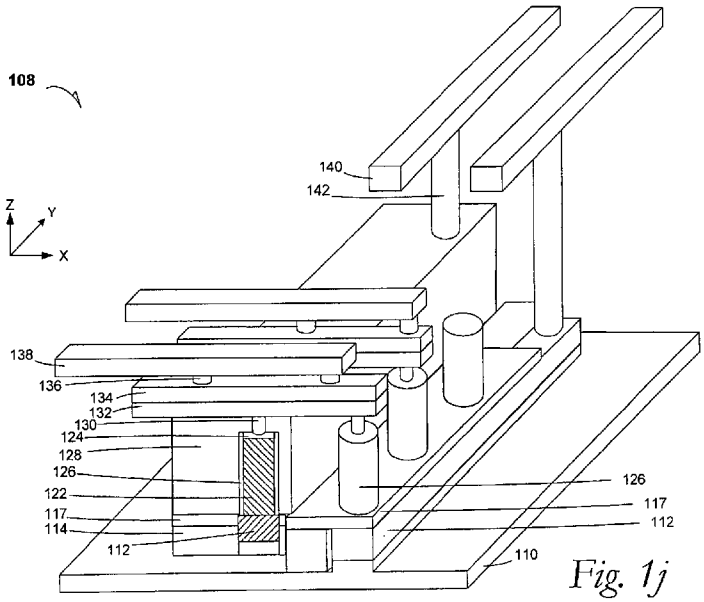

Fig. 1j

(57) **Abstract:** A variable-resistance material memory (VRMM) device includes a container conductor disposed over an epitaxial semiconductive prominence that is coupled to a VRMM. A VRMM device may also include a conductive plug in a recess that is coupled to a VRMM. A VRMM array may also include a conductive plug in a surrounding recess that is coupled to a VRMM. Apparatuses include the VRMM with one of the diode constructions.

WO 2009/091579 A1