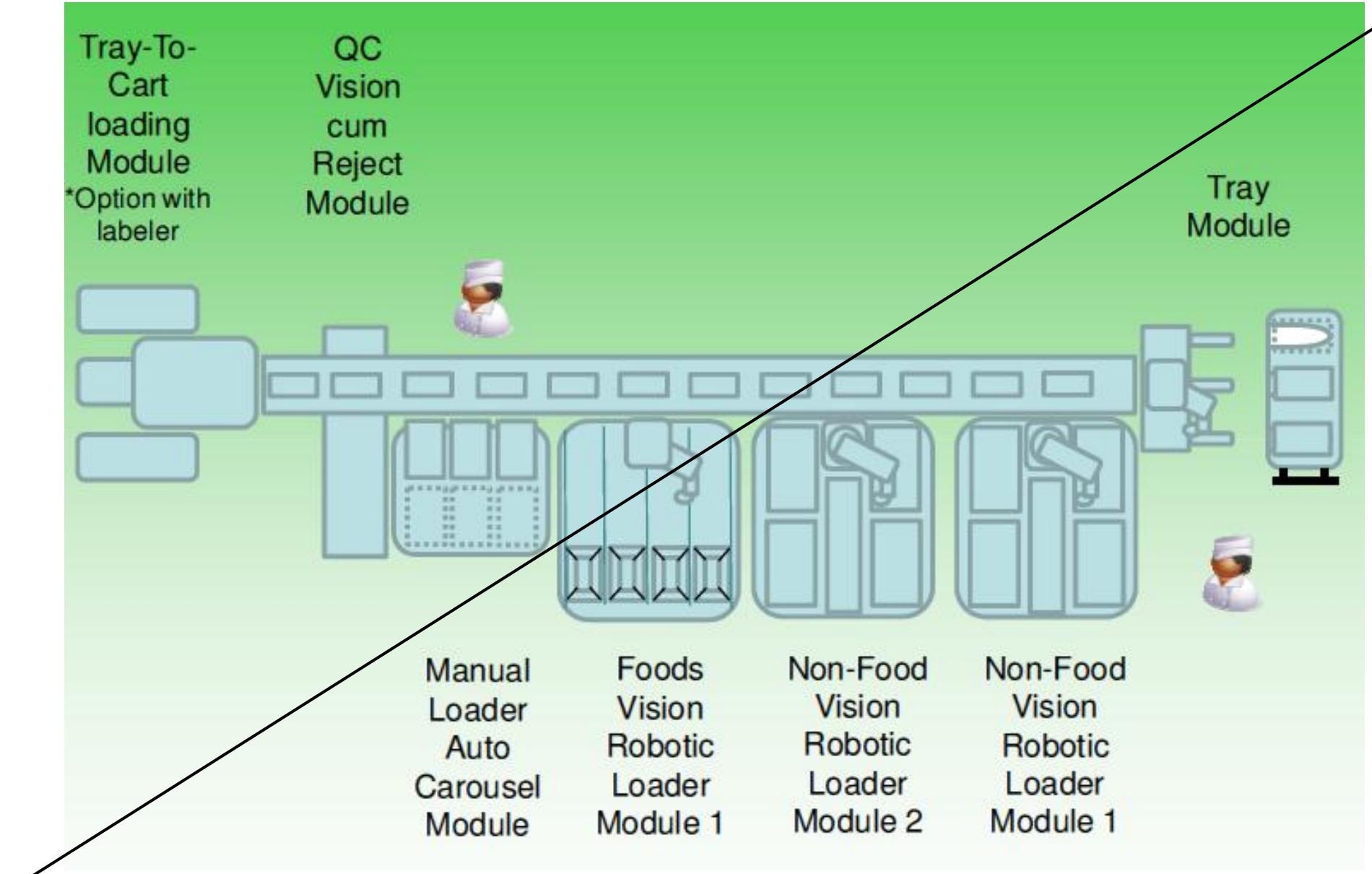
Tray-To-Cart loading Module
*Option with labeler
QC Vision cum Reject Module
Tray Module
Manual Loader Auto Carousel Module
Foods Vision Robotic Loader Module 1
Non-Food Vision Robotic Loader Module 2
Non-Food Vision Robotic Loader Module 1

Fig. 3

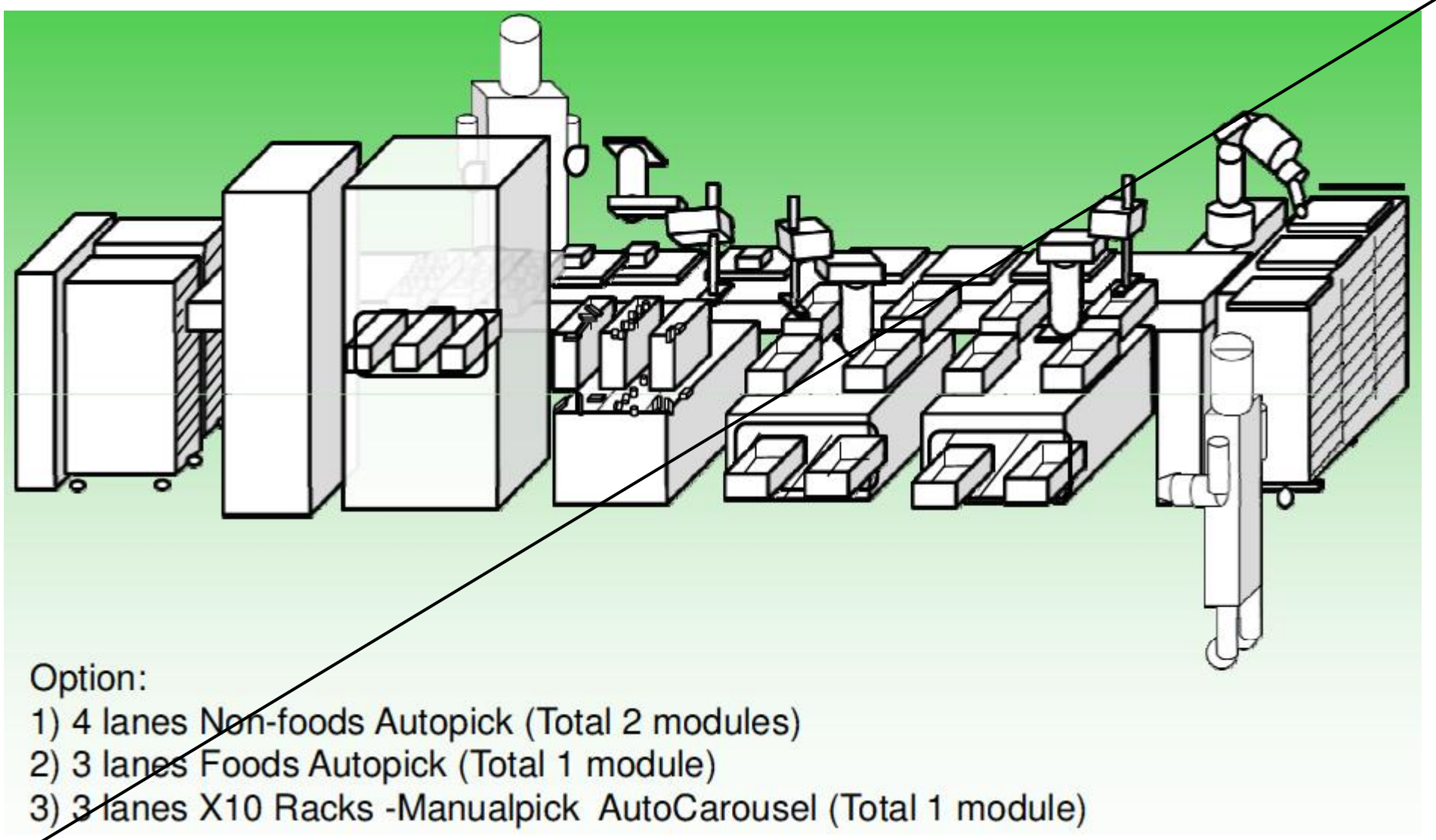
Option:
1) 4 lanes Non-foods Autopick (Total 2 modules)
2) 3 lanes Foods Autopick (Total 1 module)
3) 3 lanes X10 Racks -Manualpick AutoCarousel (Total 1 module)

Fig. 4

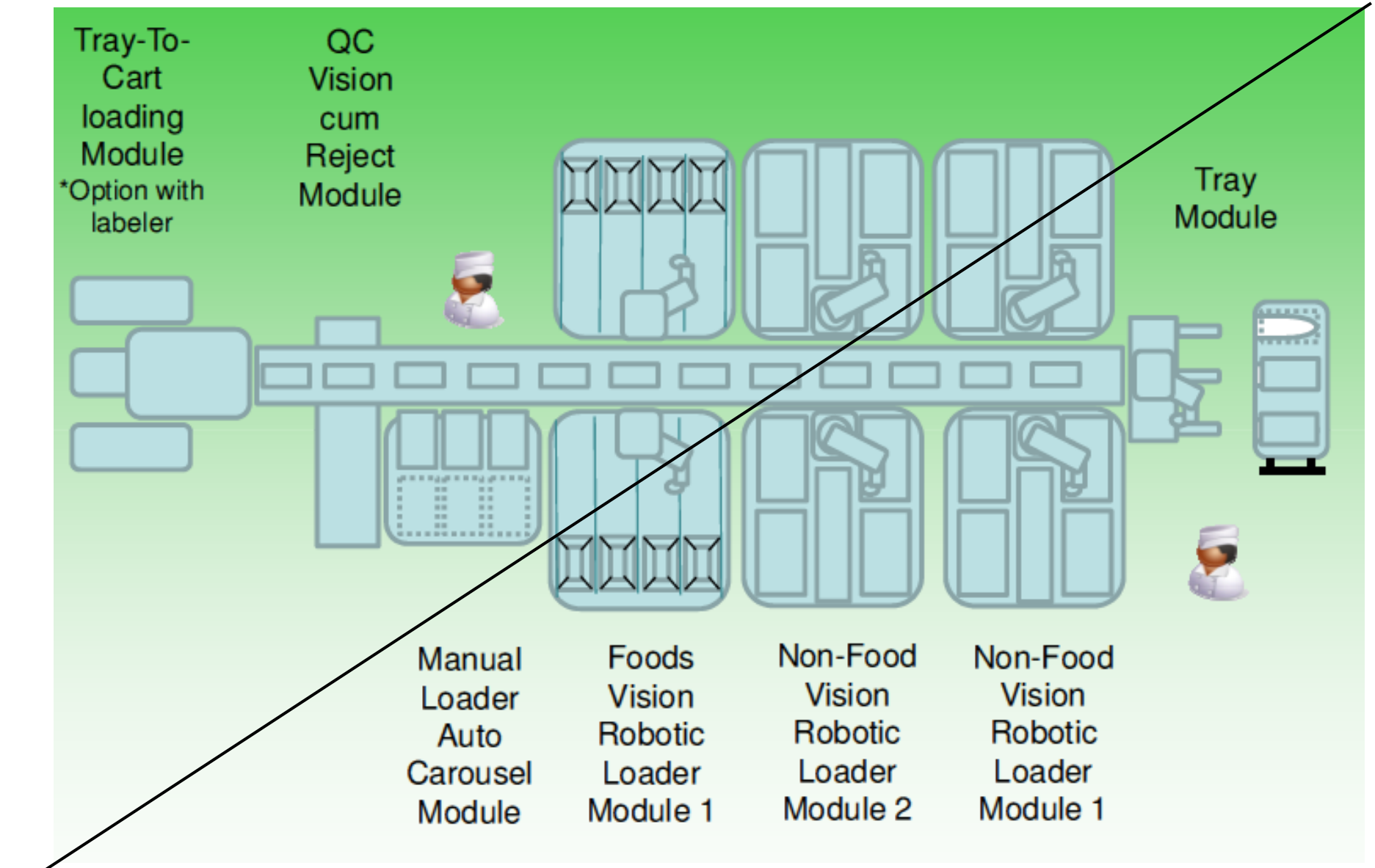
Tray-To-Cart loading Module
*Option with labeler
QC Vision cum Reject Module
Tray Module
Manual Loader Auto Carousel Module
Foods Vision Robotic Loader Module 1
Non-Food Vision Robotic Loader Module 2
Non-Food Vision Robotic Loader Module 1

Fig. 5

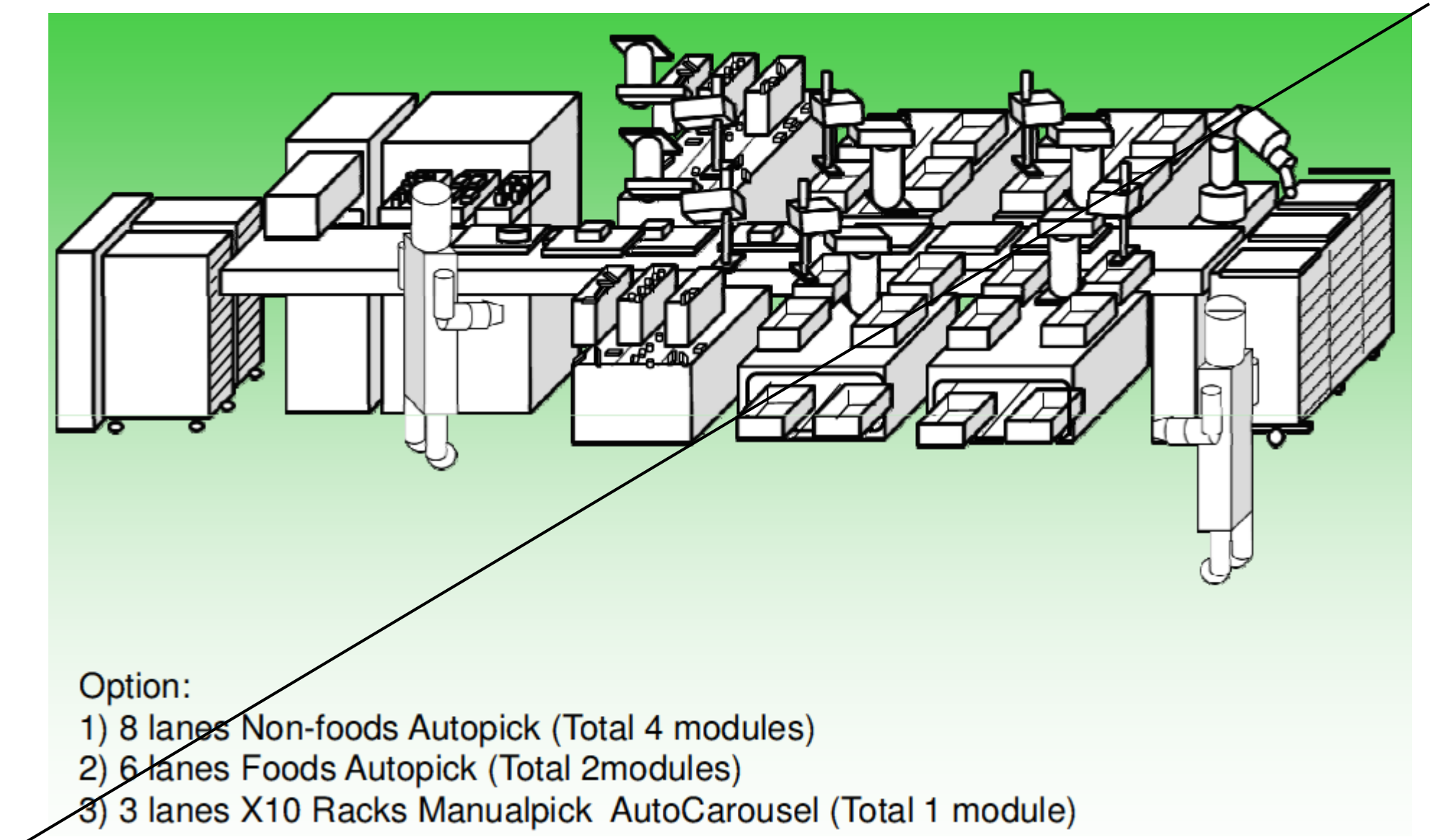
Option:
1) 8 lanes Non-foods Autopick (Total 4 modules)
2) 6 lanes Foods Autopick (Total 2modules)
3) 3 lanes X10 Racks Manualpick AutoCarousel (Total 1 module)

Fig. 6

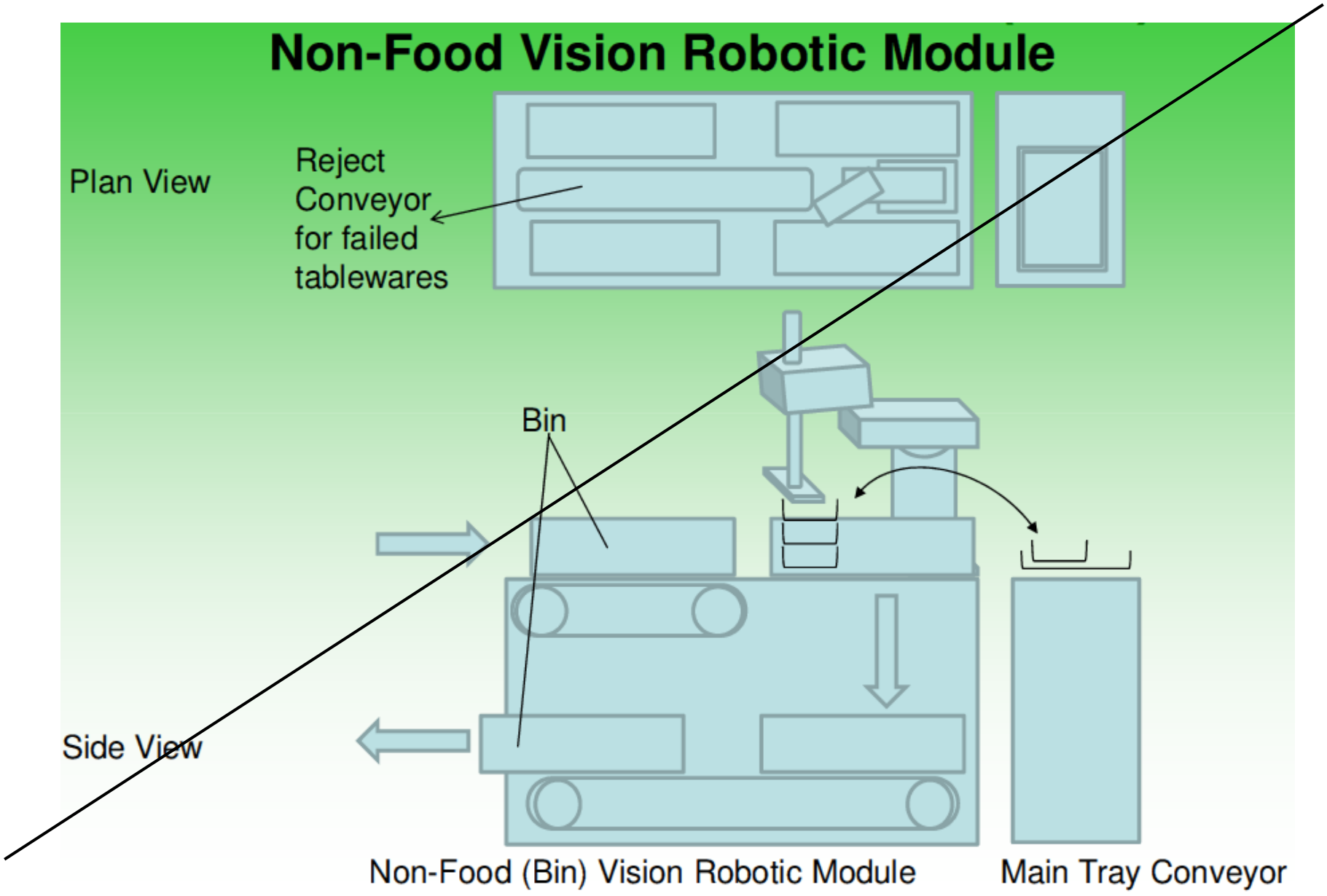
Non-Food Vision Robotic Module
Plan View
Reject
Conveyor
for failed
tablewares
Bin
Side View
Non-Food (Bin) Vision Robotic Module
Main Tray Conveyor

Fig. 7

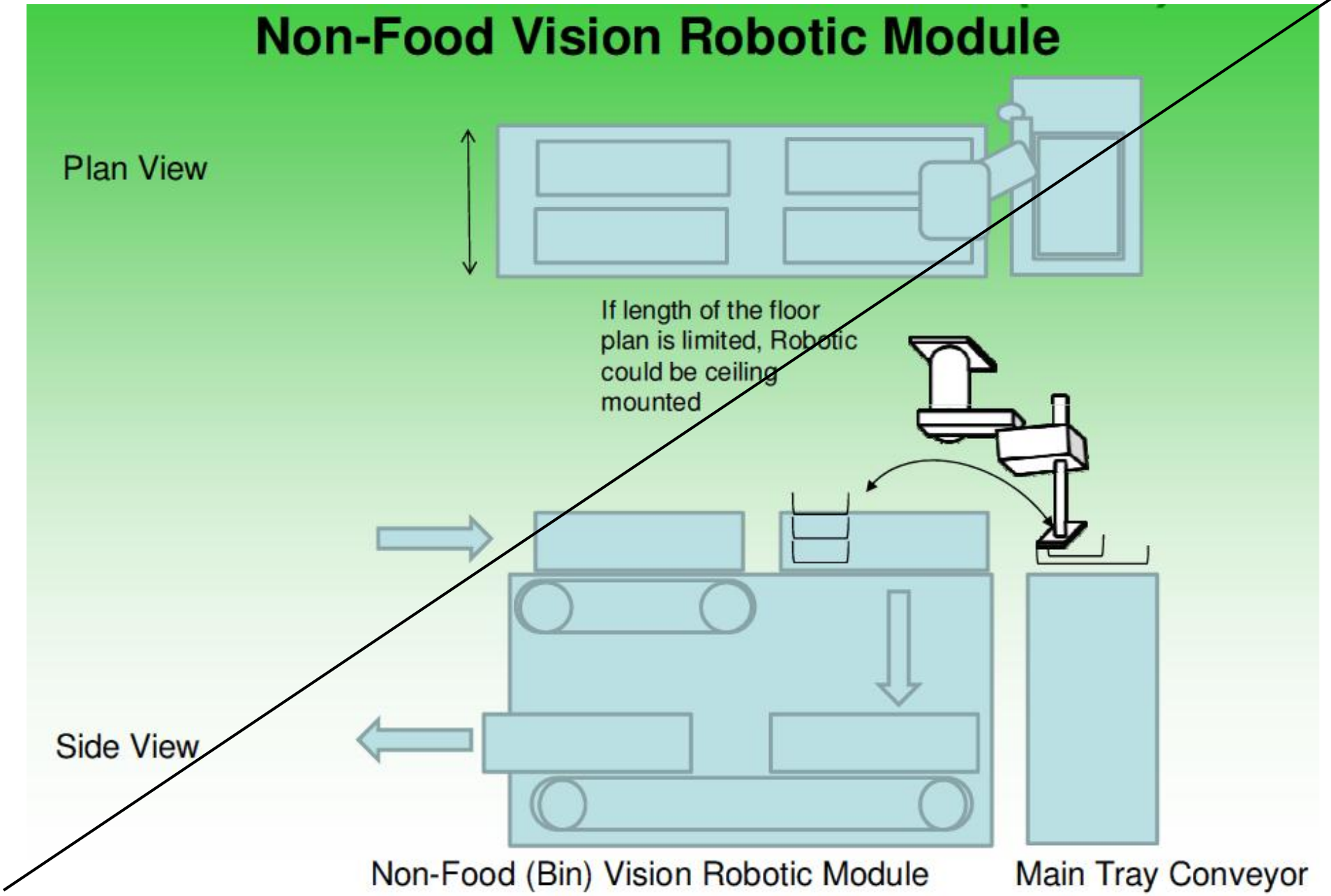
Non-Food Vision Robotic Module
Plan View
If length of the floor plan is limited, Robotic could be ceiling mounted
Side View
Non-Food (Bin) Vision Robotic Module
Main Tray Conveyor

Fig. 8

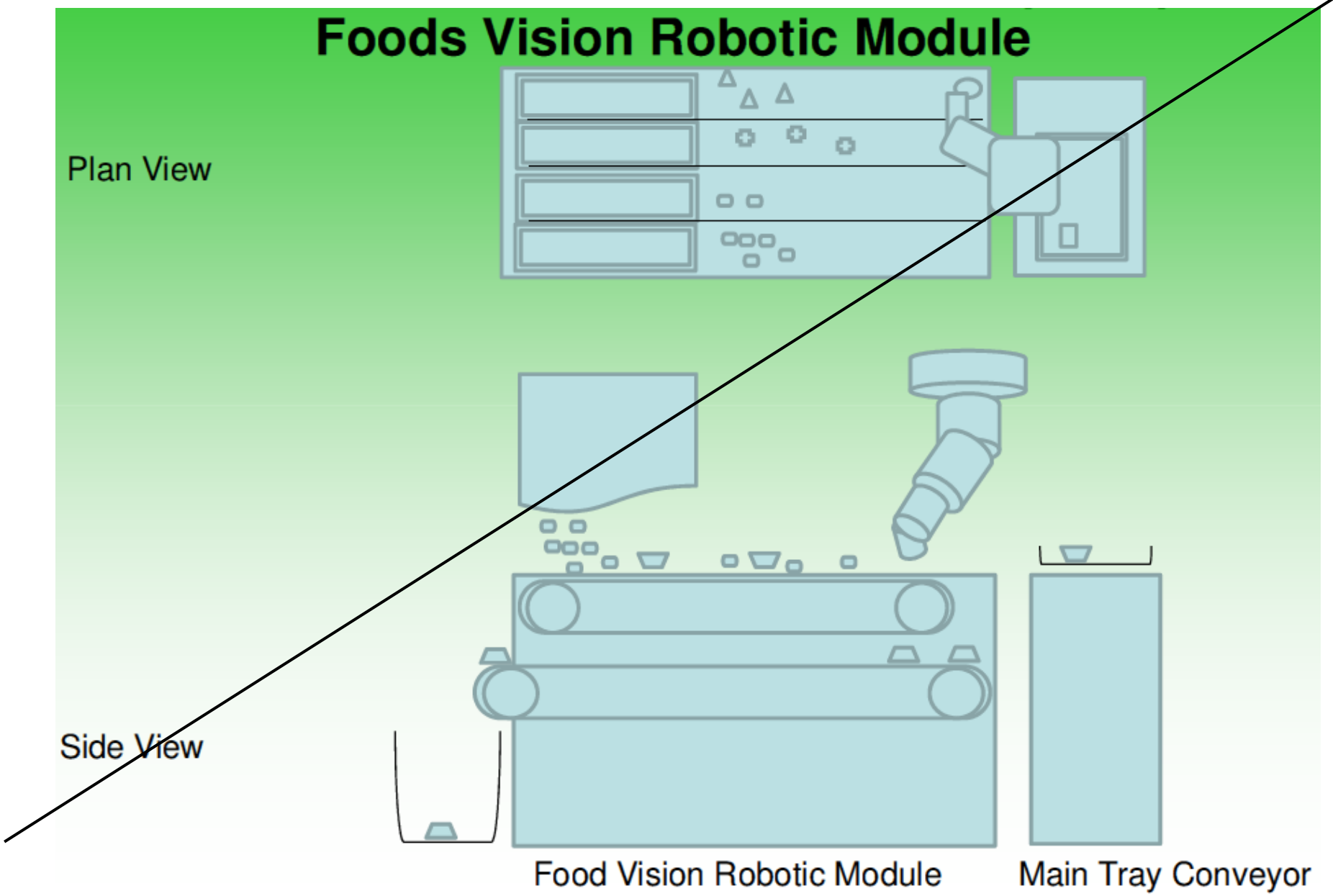
Foods Vision Robotic Module
Plan View
Side View
Food Vision Robotic Module
Main Tray Conveyor

Fig. 9

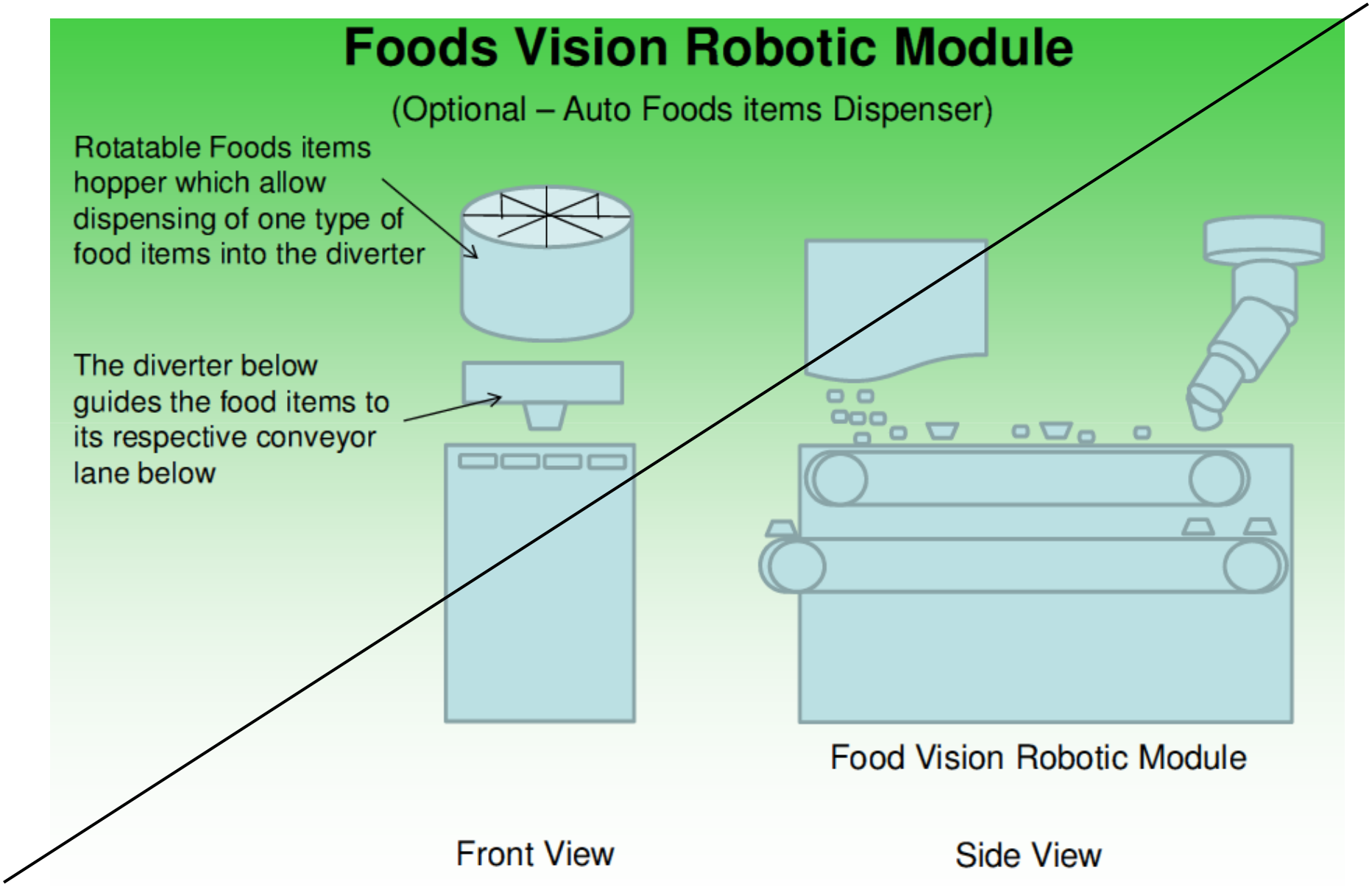
Foods Vision Robotic Module
(Optional – Auto Foods items Dispenser)
Rotatable Foods items hopper which allow dispensing of one type of food items into the diverter
The diverter below guides the food items to its respective conveyor lane below
Food Vision Robotic Module
Front View
Side View

Fig. 10

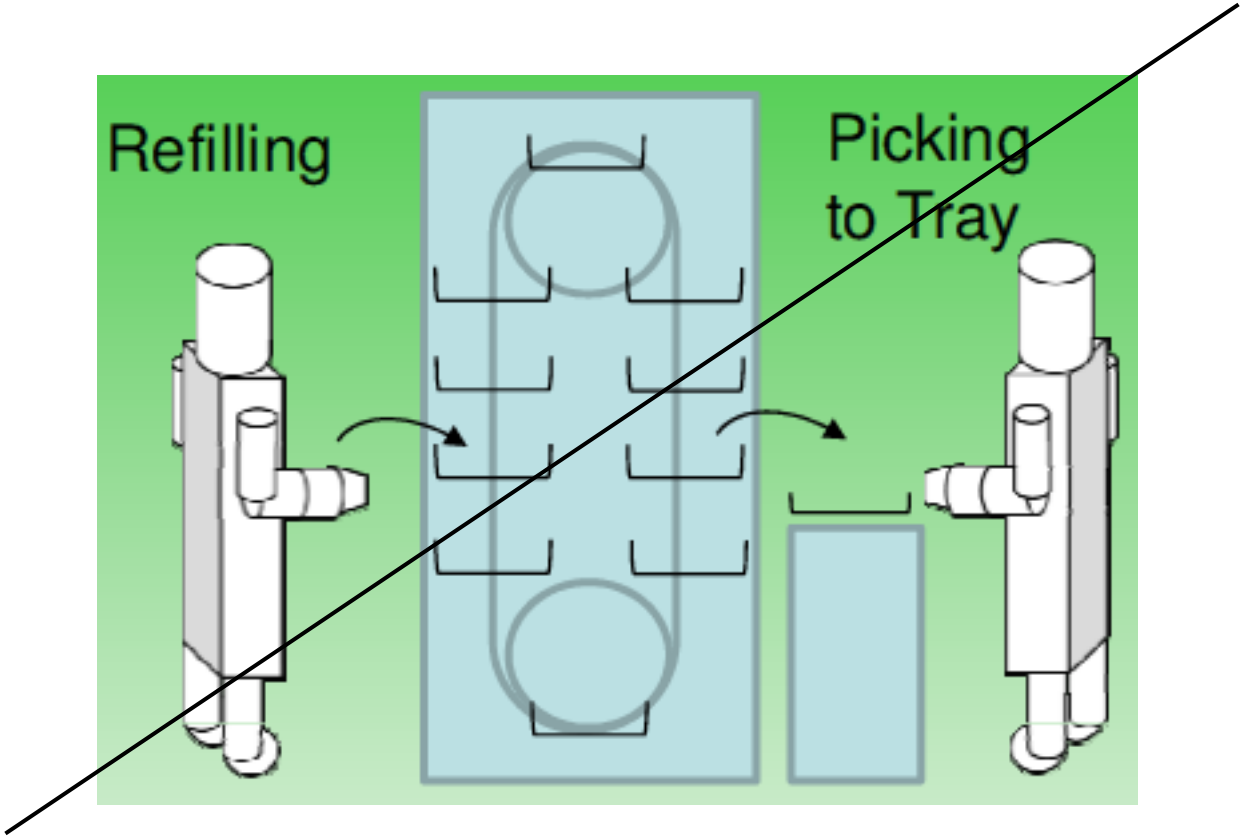

Fig. 11

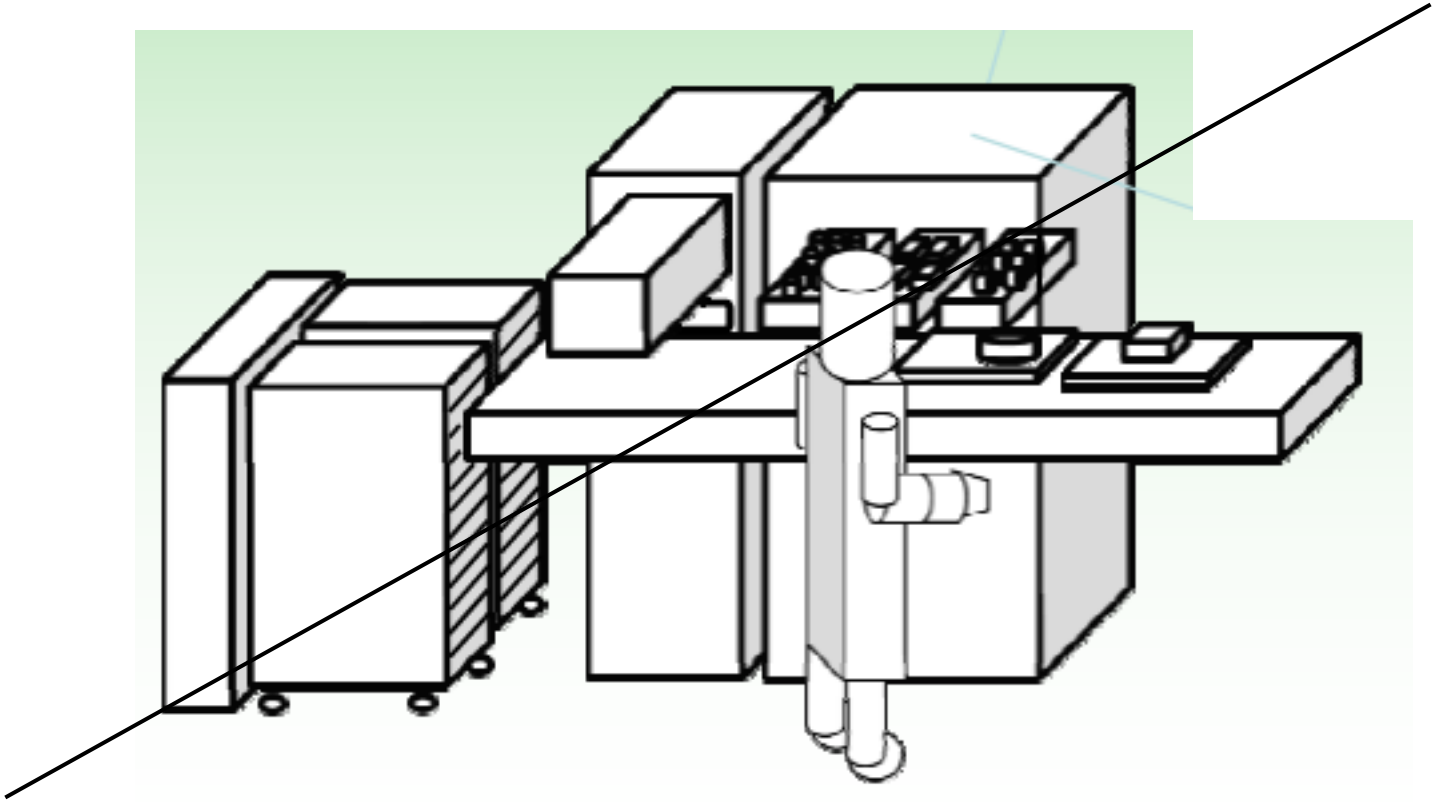

Fig. 12

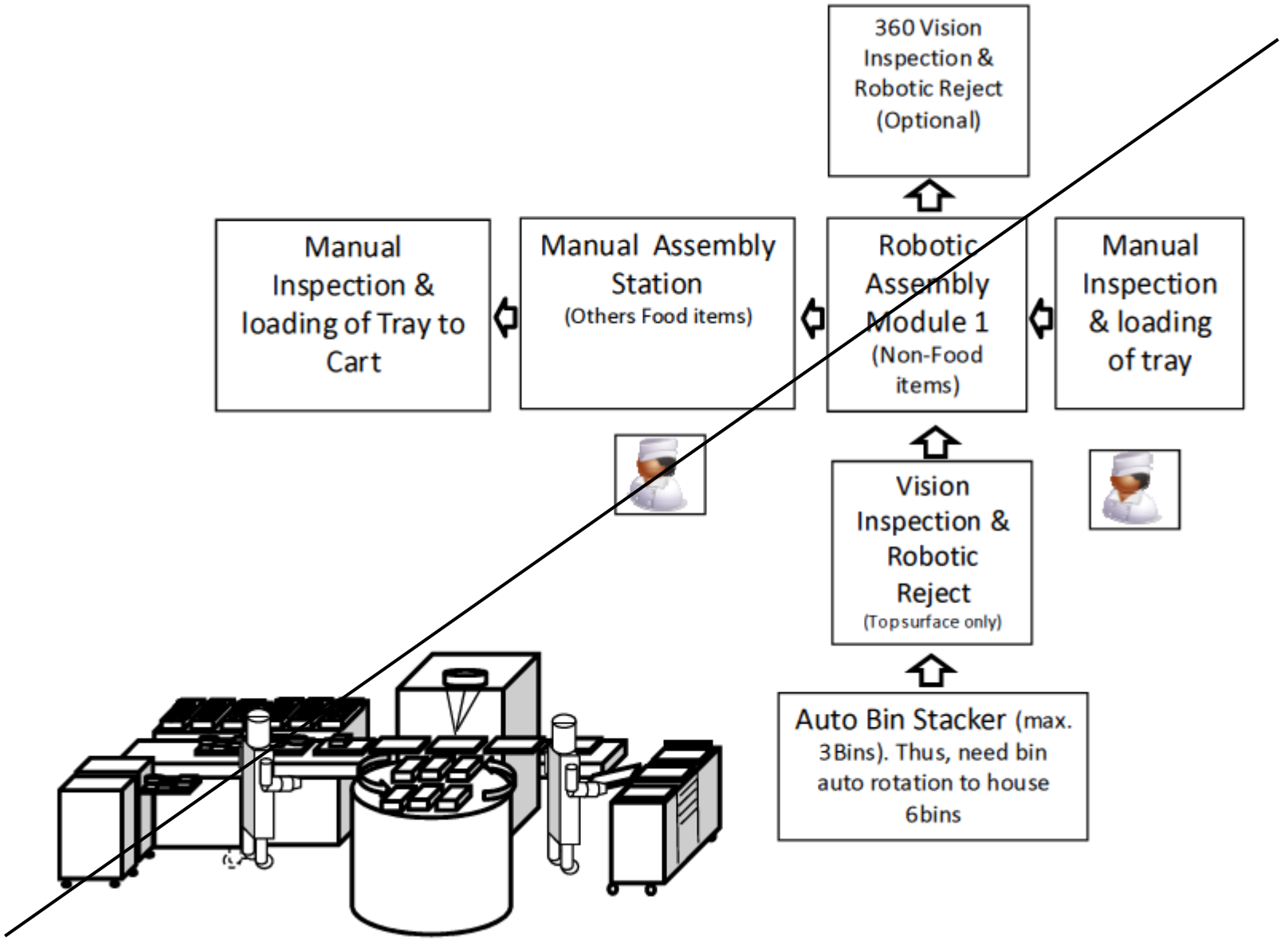
360 Vision Inspection & Robotic Reject (Optional)
Manual Inspection & loading of Tray to Cart
Manual Assembly Station (Others Food items)
Robotic Assembly Module 1 (Non-Food items)
Manual Inspection & loading of tray
Vision Inspection & Robotic Reject (Top surface only)
Auto Bin Stacker (max. 3 Bins). Thus, need bin auto rotation to house 6 bins

Fig. 14

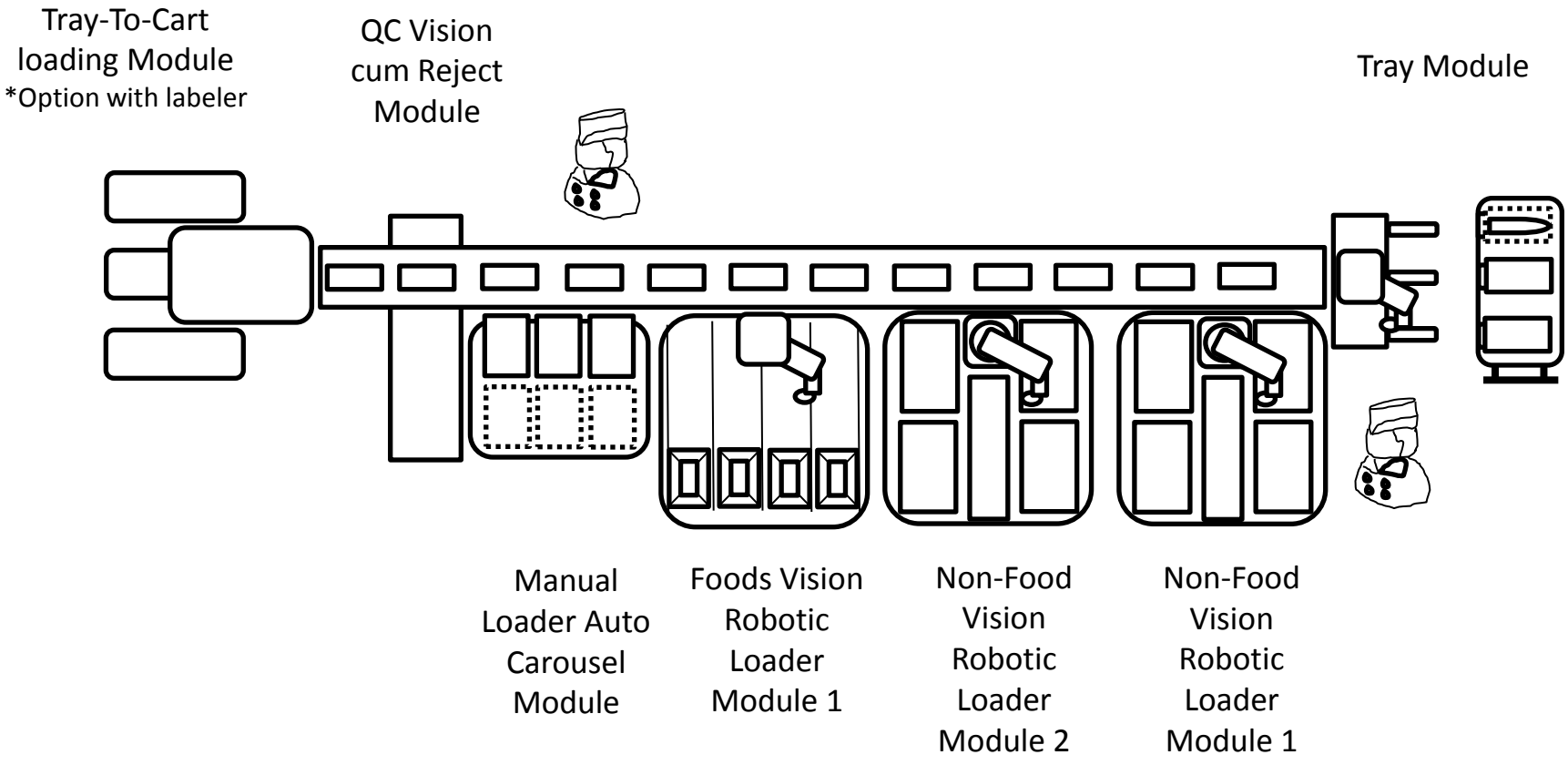
Tray-To-Cart loading Module
*Option with labeler
QC Vision cum Reject Module
Tray Module
Manual Loader Auto Carousel Module
Foods Vision Robotic Loader Module 1
Non-Food Vision Robotic Loader Module 2
Non-Food Vision Robotic Loader Module 1

Fig. 3

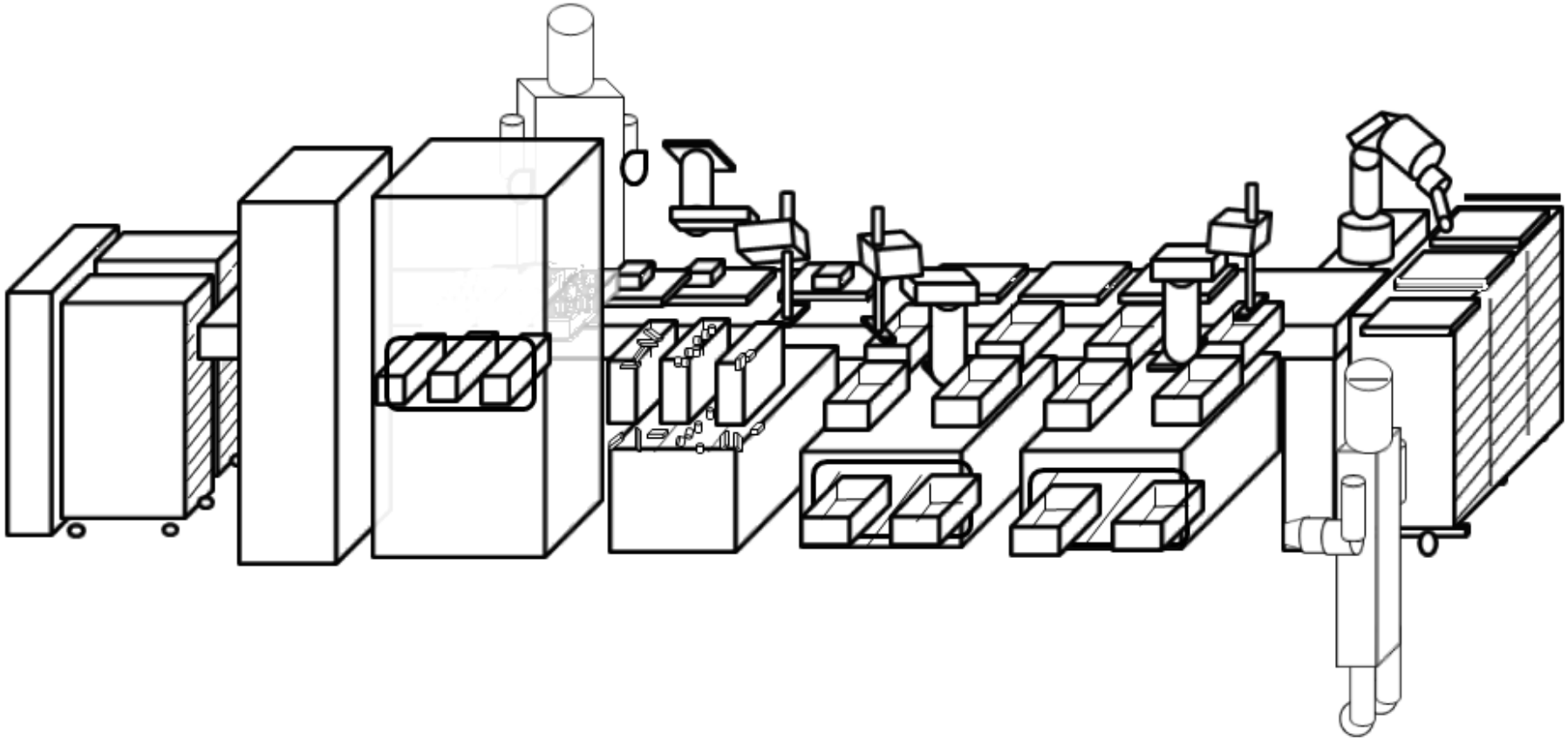

Option:
1) 4 lanes Non-foods Autopick (Total 2 modules)
2) 3 lanes Foods Autopick (Total 1 module)
3) 3 lanes X10 Racks -Manualpick AutoCarousel (Total 1 module)

Fig. 4

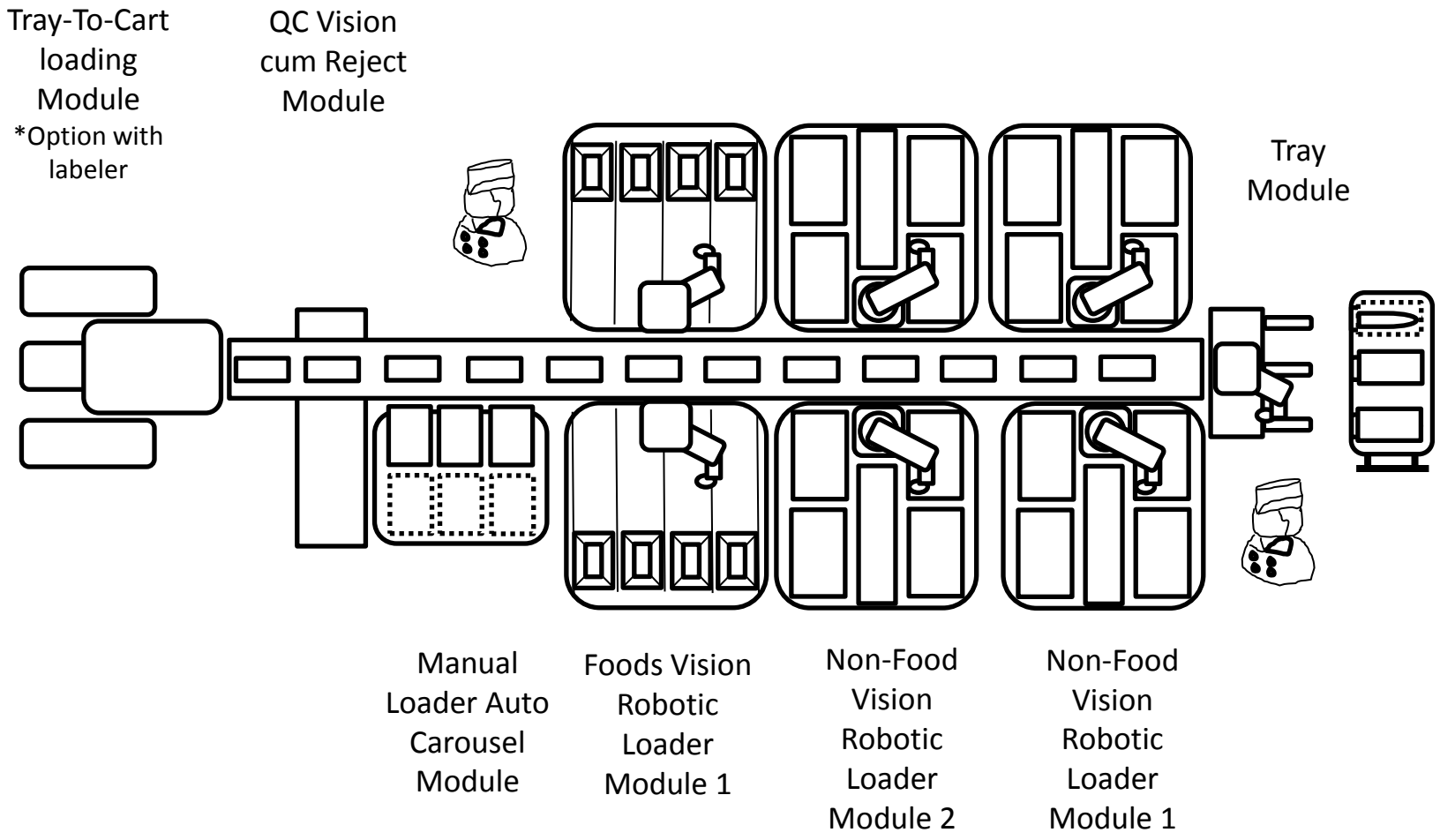
Tray-To-Cart loading Module
*Option with labeler
QC Vision cum Reject Module
Tray Module
Manual Loader Auto Carousel Module
Foods Vision Robotic Loader Module 1
Non-Food Vision Robotic Loader Module 2
Non-Food Vision Robotic Loader Module 1

Fig. 5

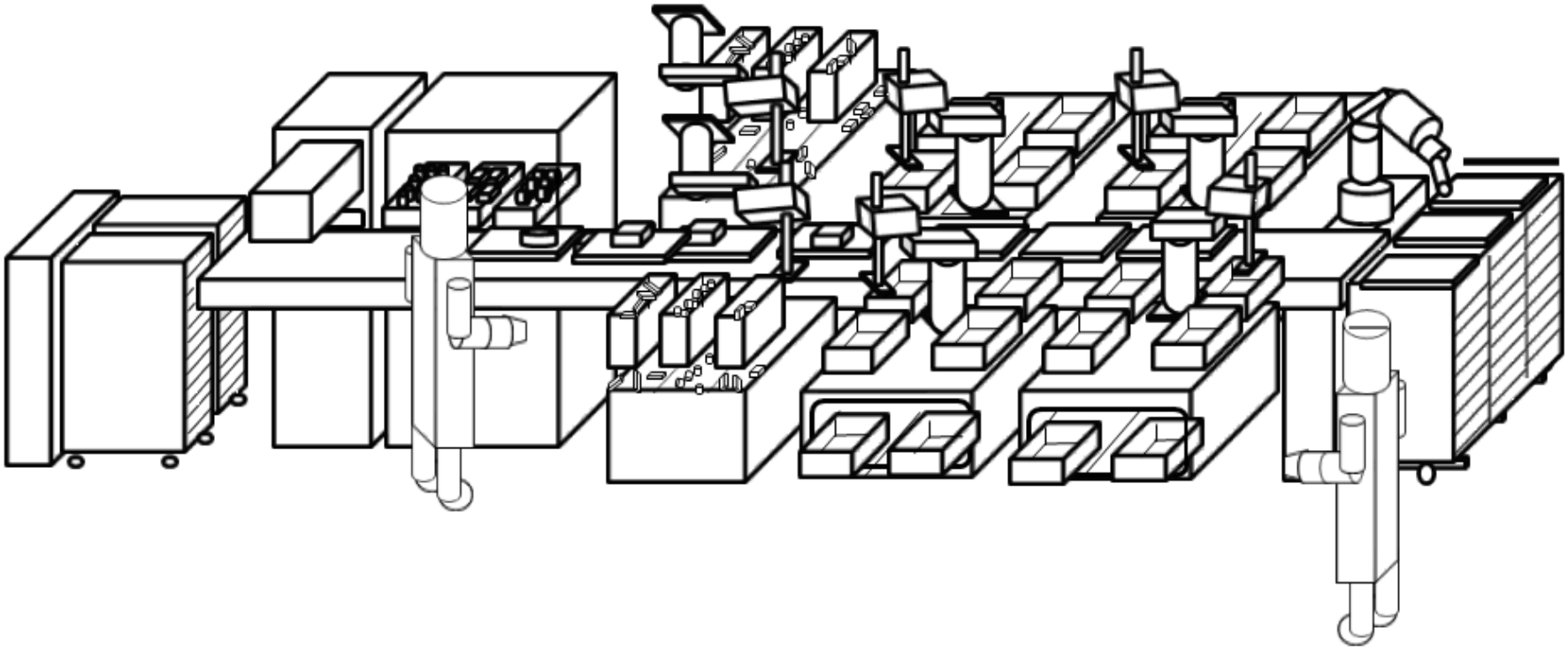

Option:

1) 8 lanes Non-foods Autopick (Total 4 modules)
2) 6 lanes Foods Autopick (Total 2modules)
3) 3 lanes X10 Racks Manualpick AutoCarousel (Total 1 module)

Fig. 6

Non-Food Vision Robotic Module

Plane View

Reject Conveyor for failed tablewares

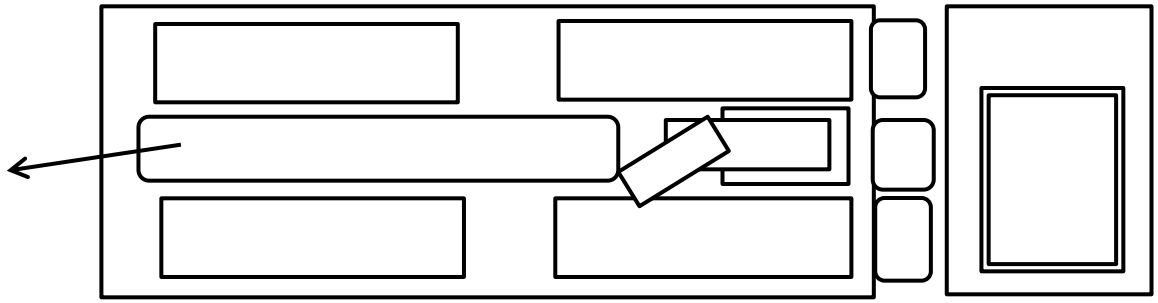

Side View

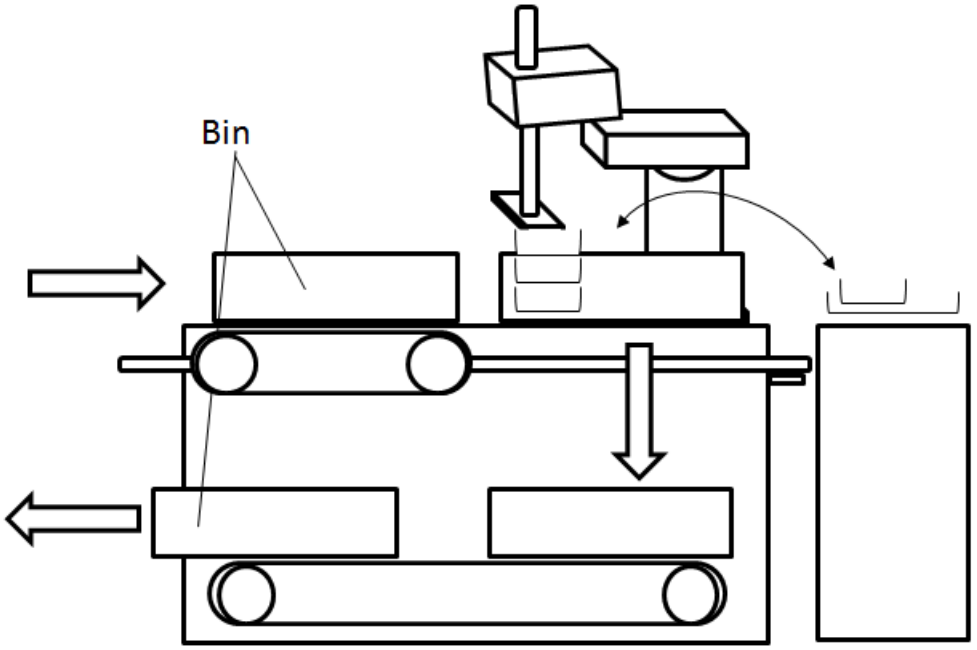

Non-Food (Bin) Vision Robotic Module Main Tray Conveyor

Fig.7

Non-Food Vision Robotic Module

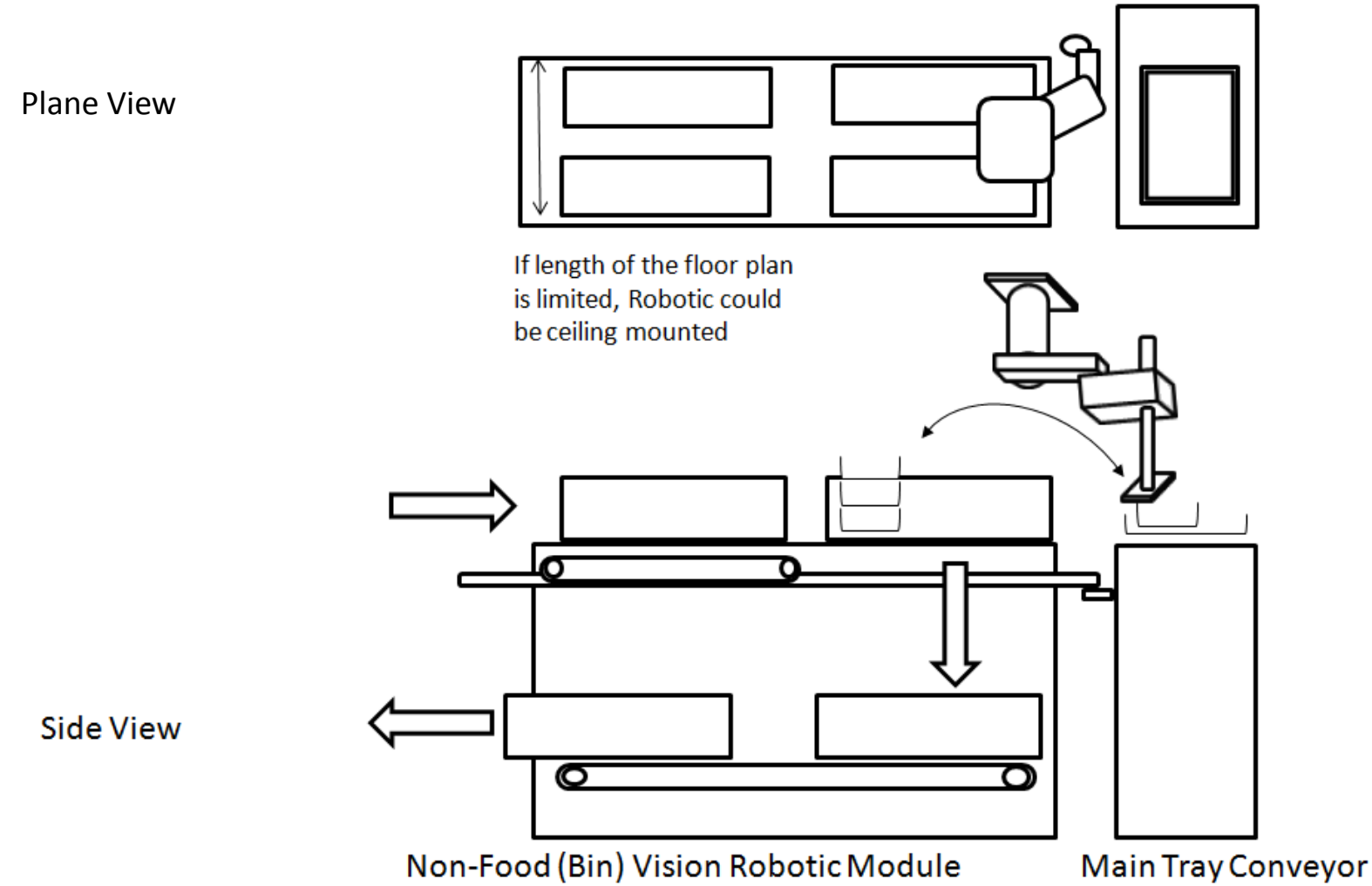

Fig. 8

Foods Vision Robotic Module

Plane View

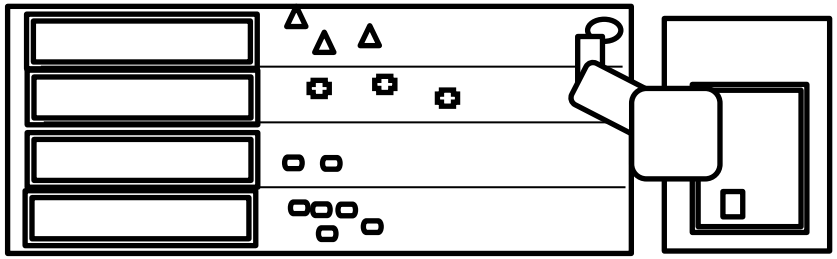

Side View

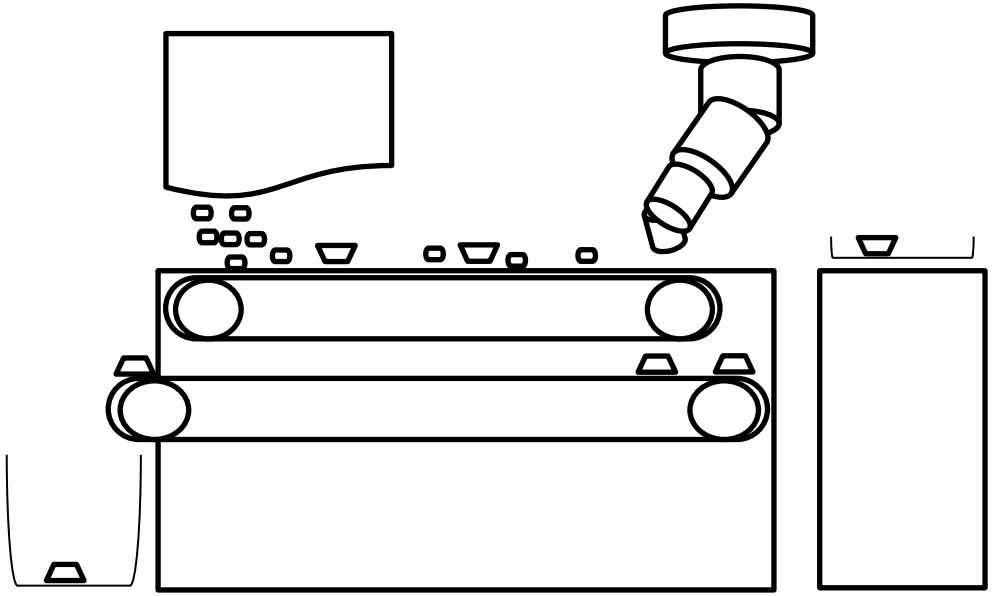

Food Vision Robotic Module

Main Tray Conveyor

Fig. 9

Foods Vision Robotic Module

(Optional – Auto Foods items Dispenser)

Rotatable Foods items hopper which allow dispensing of one type of food items into the diverter

The diverter below guides the food items to its respective conveyor lane below

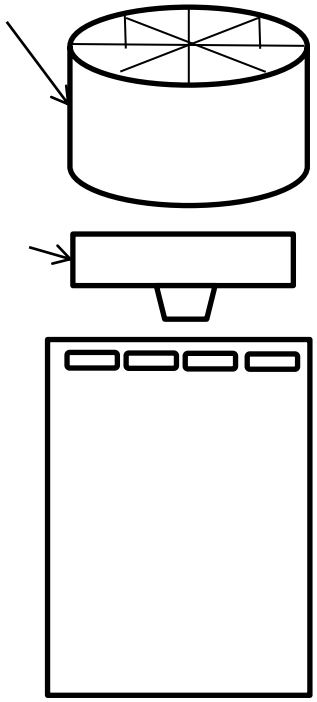

Front View

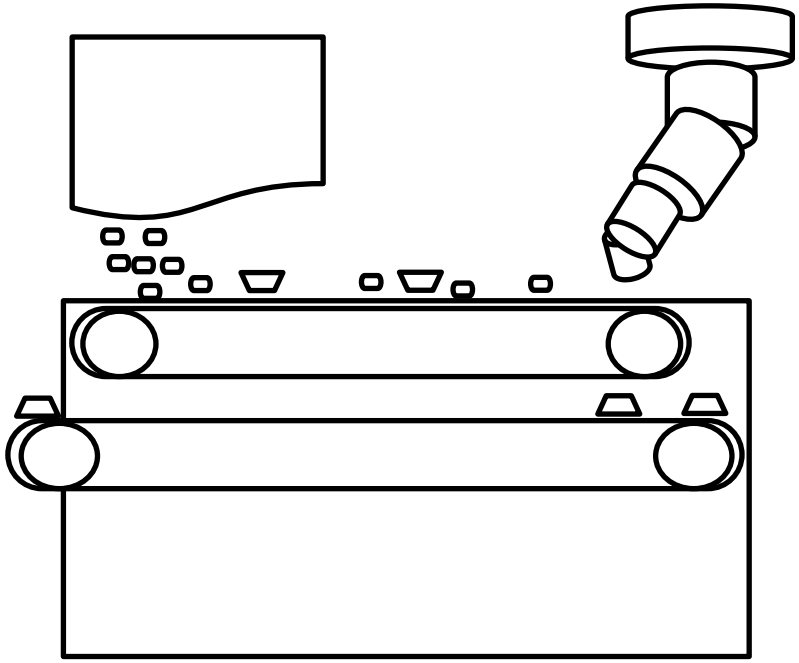

Food Vision Robotic Module

Side View

Fig. 10

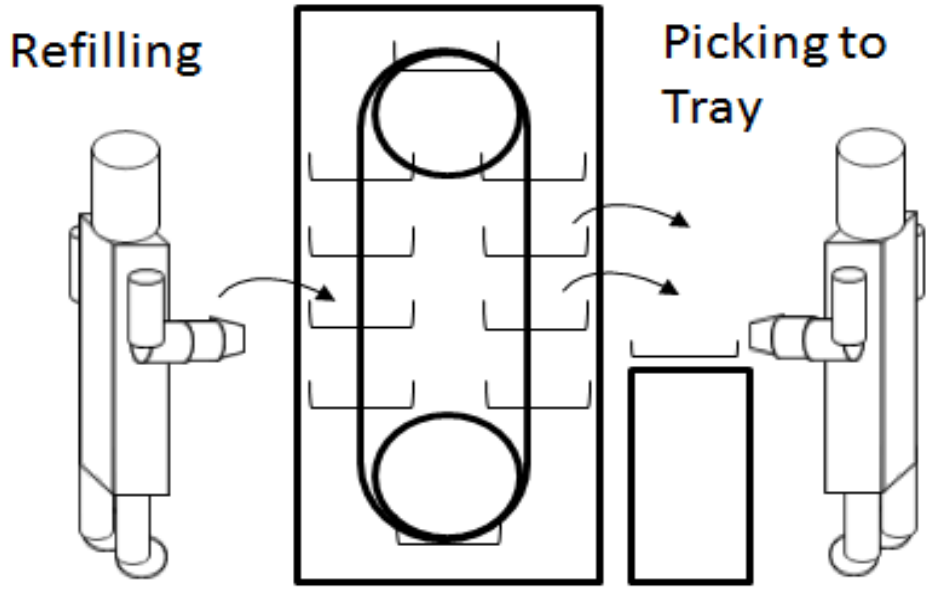

Fig. 11

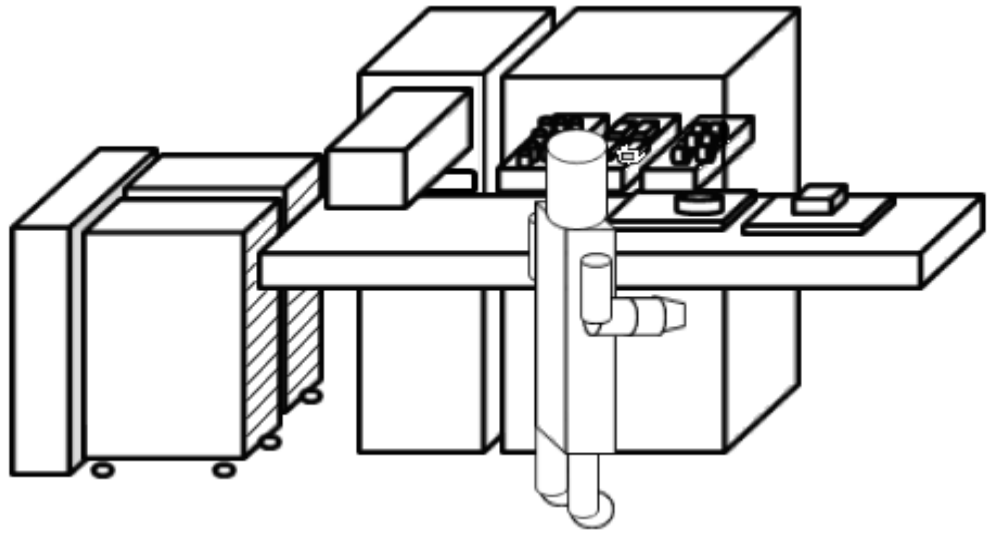

Fig. 12

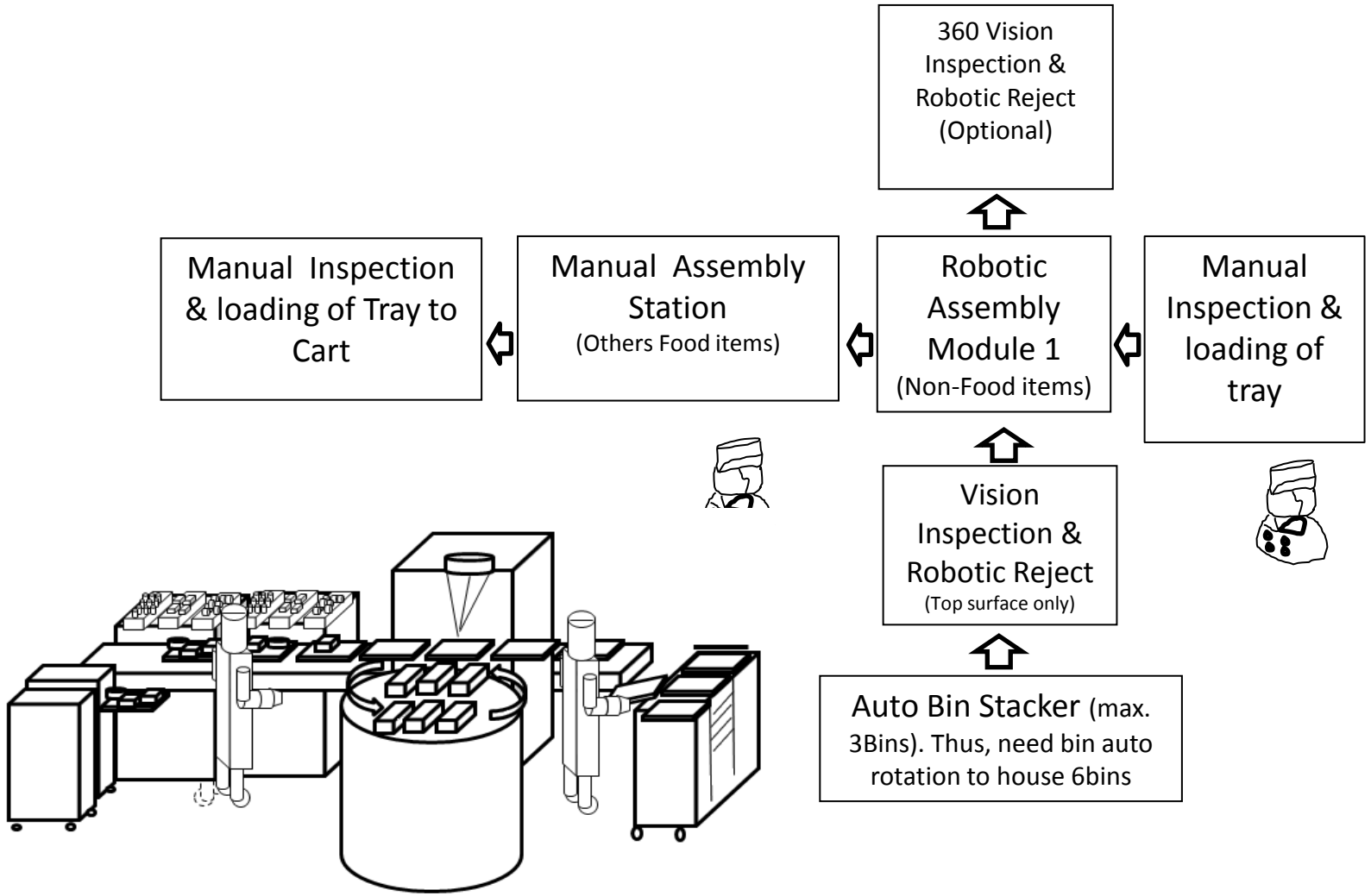
360 Vision Inspection & Robotic Reject (Optional)
Manual Inspection & loading of Tray to Cart
Manual Assembly Station (Others Food items)
Robotic Assembly Module 1 (Non-Food items)
Manual Inspection & loading of tray
Vision Inspection & Robotic Reject (Top surface only)
Auto Bin Stacker (max. 3Bins). Thus, need bin auto rotation to house 6bins

Fig. 14