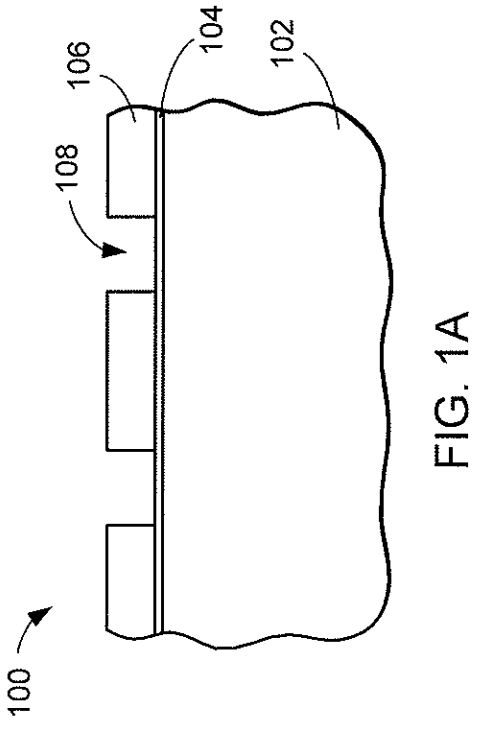

FIG. 1A

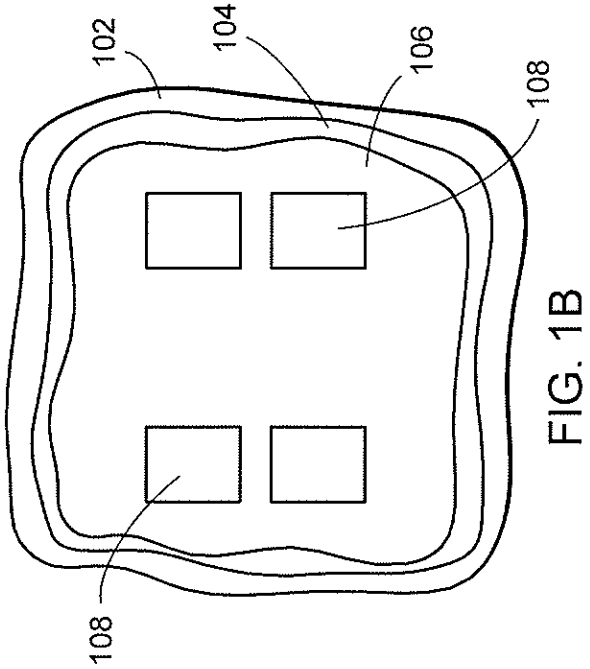

FIG. 1B

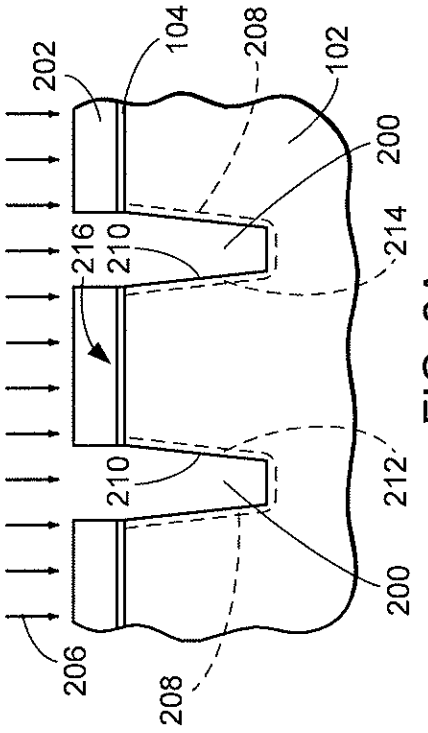

FIG. 2A

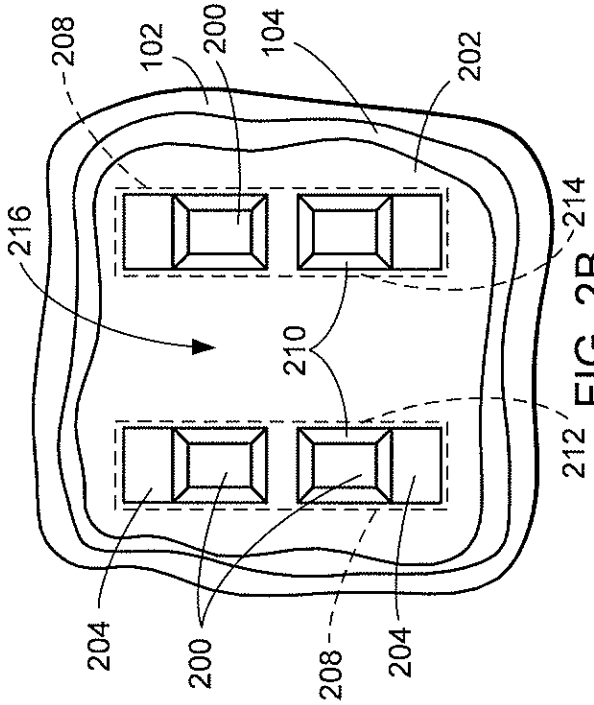

FIG. 2B

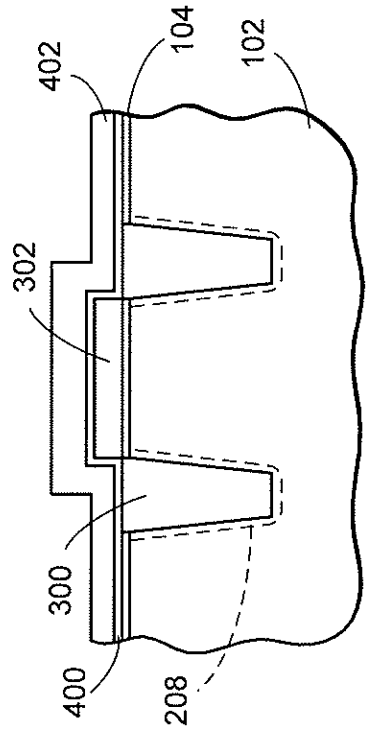

FIG. 4A

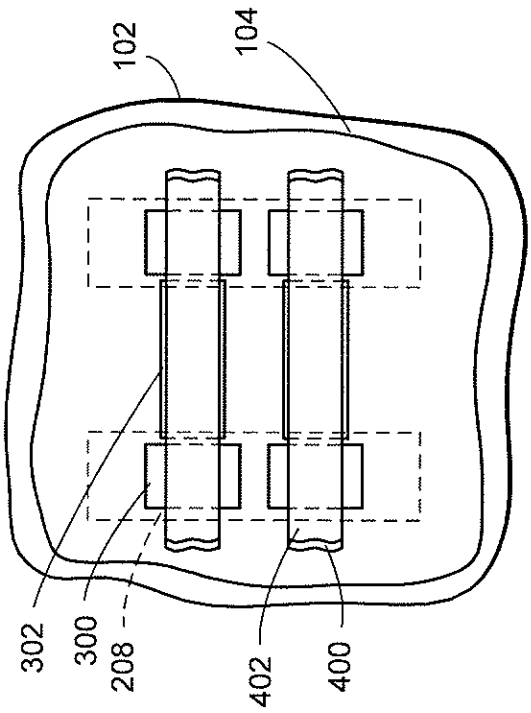

FIG. 4B

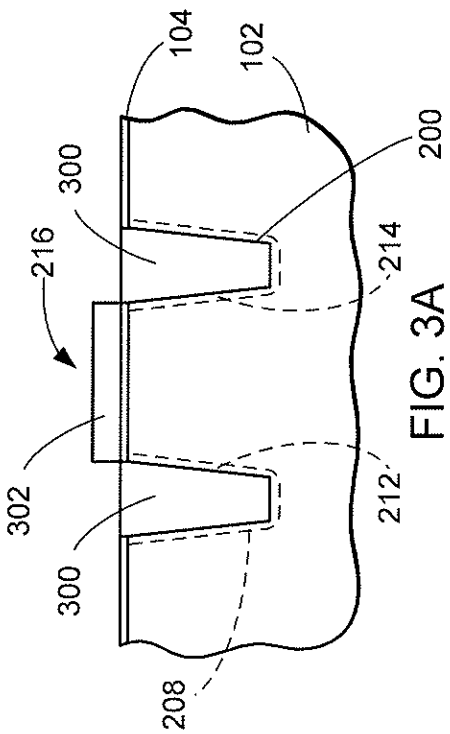

FIG. 3A

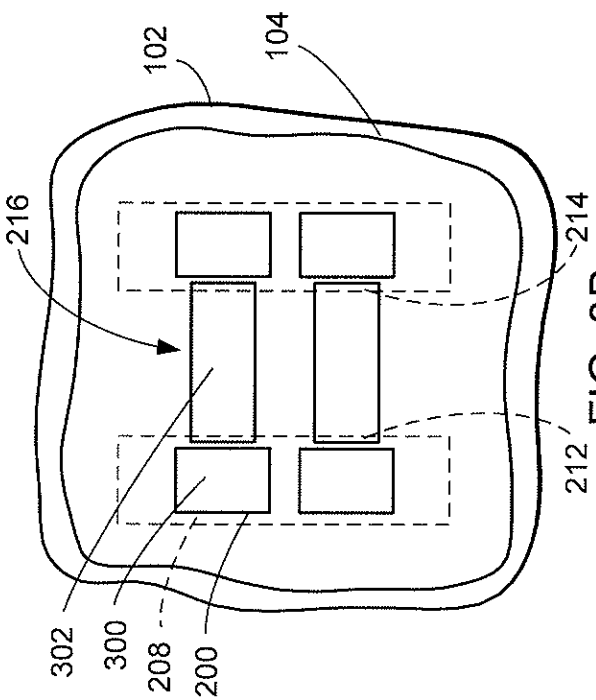

FIG. 3B

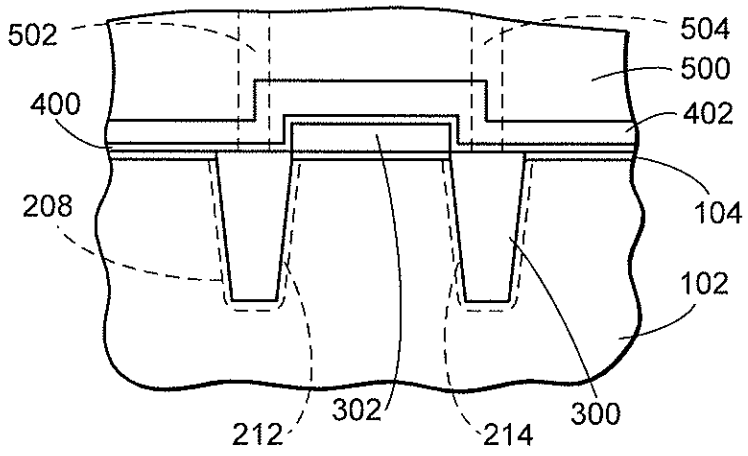
502
504
500
400
402
208
104
102
212
302
214
300

FIG. 5A

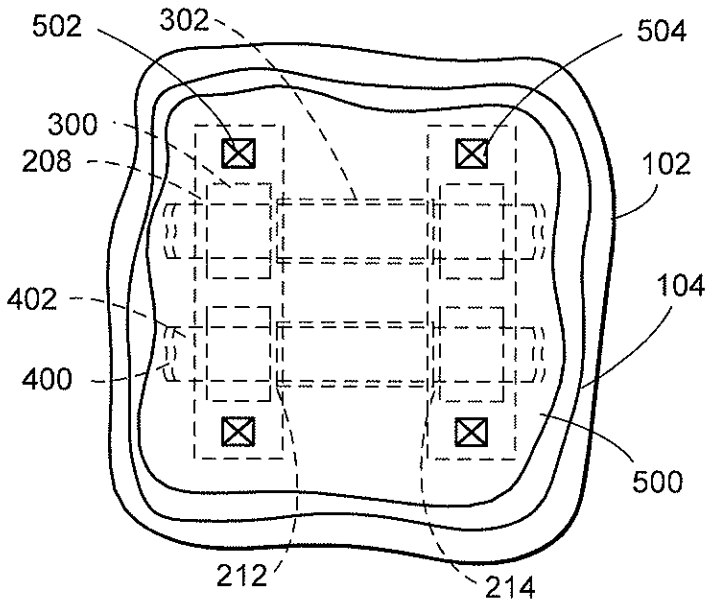
502
302
504
300
208
102
402
104
400
500
212
214

FIG. 5B

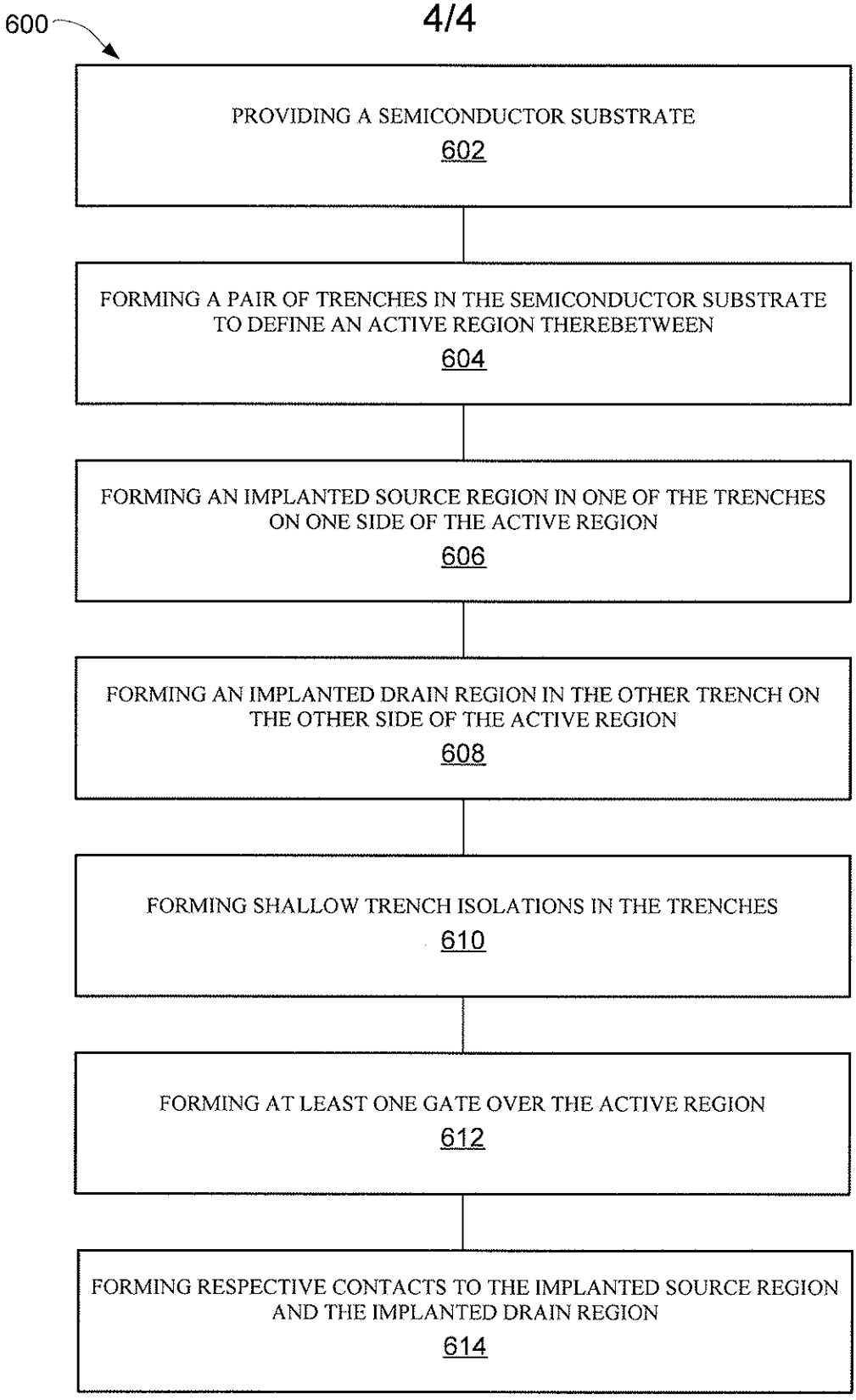
600
PROVIDING A SEMICONDUCTOR SUBSTRATE
602
FORMING A PAIR OF TRENCHES IN THE SEMICONDUCTOR SUBSTRATE TO DEFINE AN ACTIVE REGION THEREBETWEEN
604
FORMING AN IMPLANTED SOURCE REGION IN ONE OF THE TRENCHES ON ONE SIDE OF THE ACTIVE REGION
606
FORMING AN IMPLANTED DRAIN REGION IN THE OTHER TRENCH ON THE OTHER SIDE OF THE ACTIVE REGION
608
FORMING SHALLOW TRENCH ISOLATIONS IN THE TRENCHES
610
FORMING AT LEAST ONE GATE OVER THE ACTIVE REGION
612
FORMING RESPECTIVE CONTACTS TO THE IMPLANTED SOURCE REGION AND THE IMPLANTED DRAIN REGION
614

FIG. 6