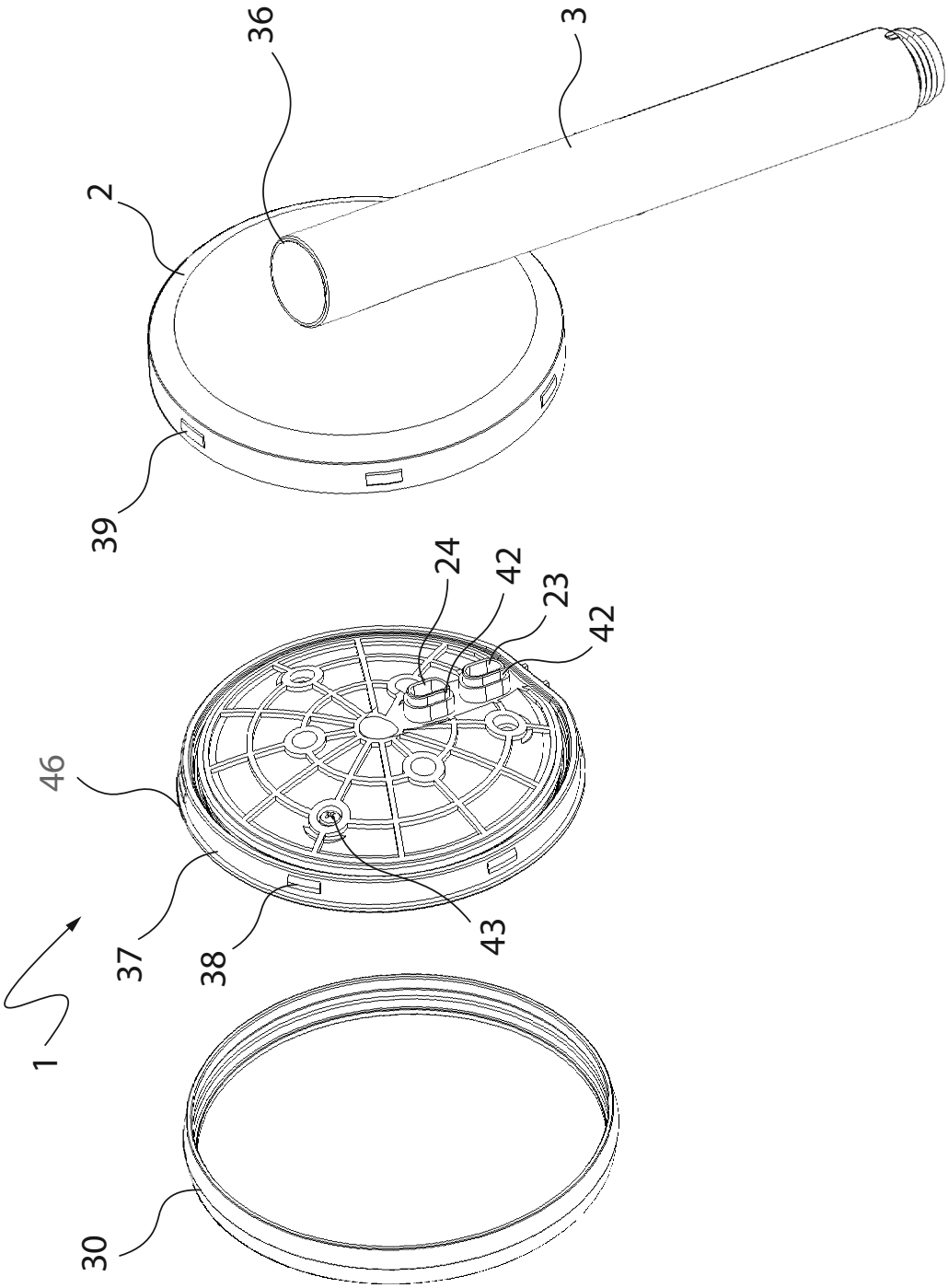

Figure 11

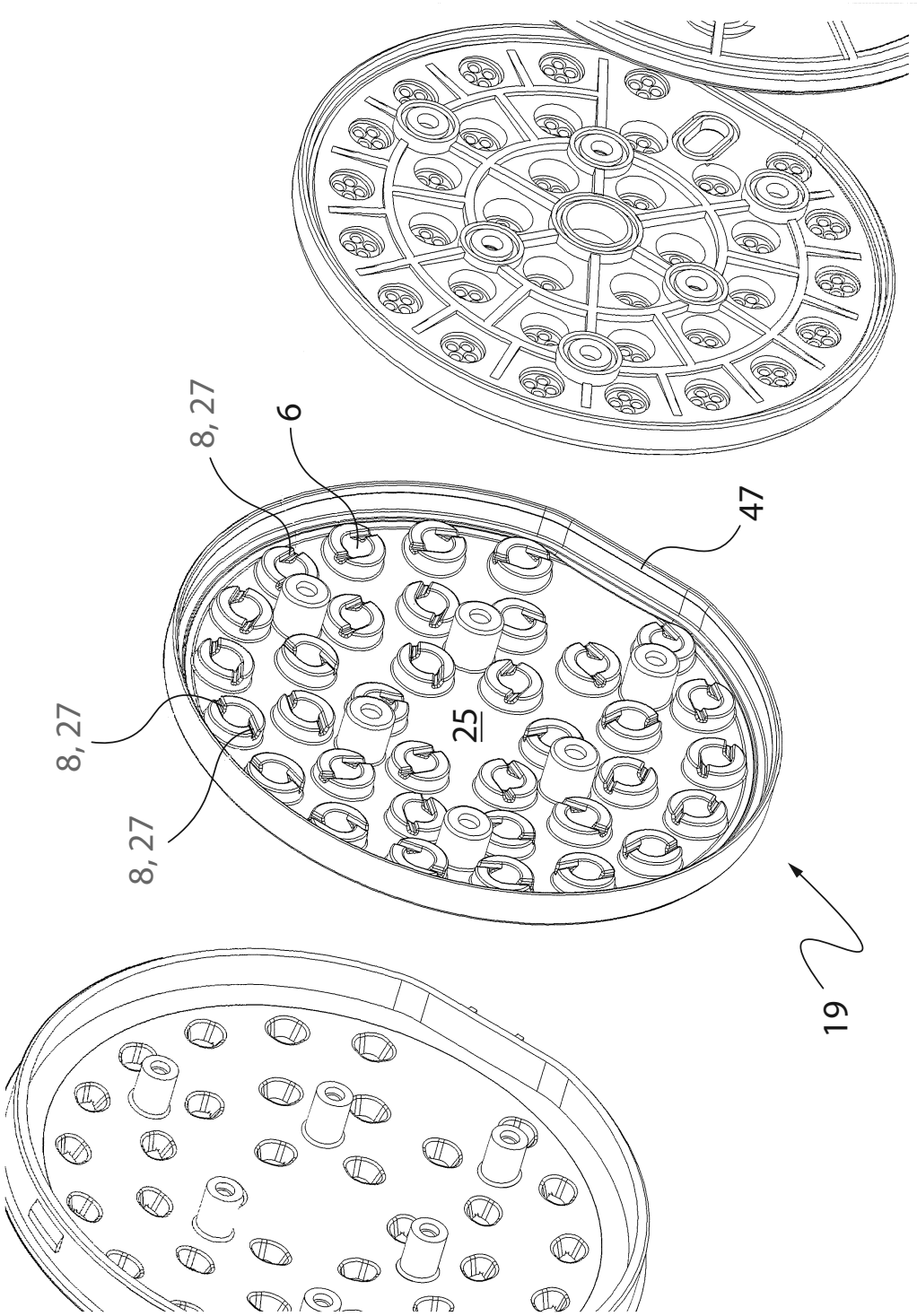

Figure 15

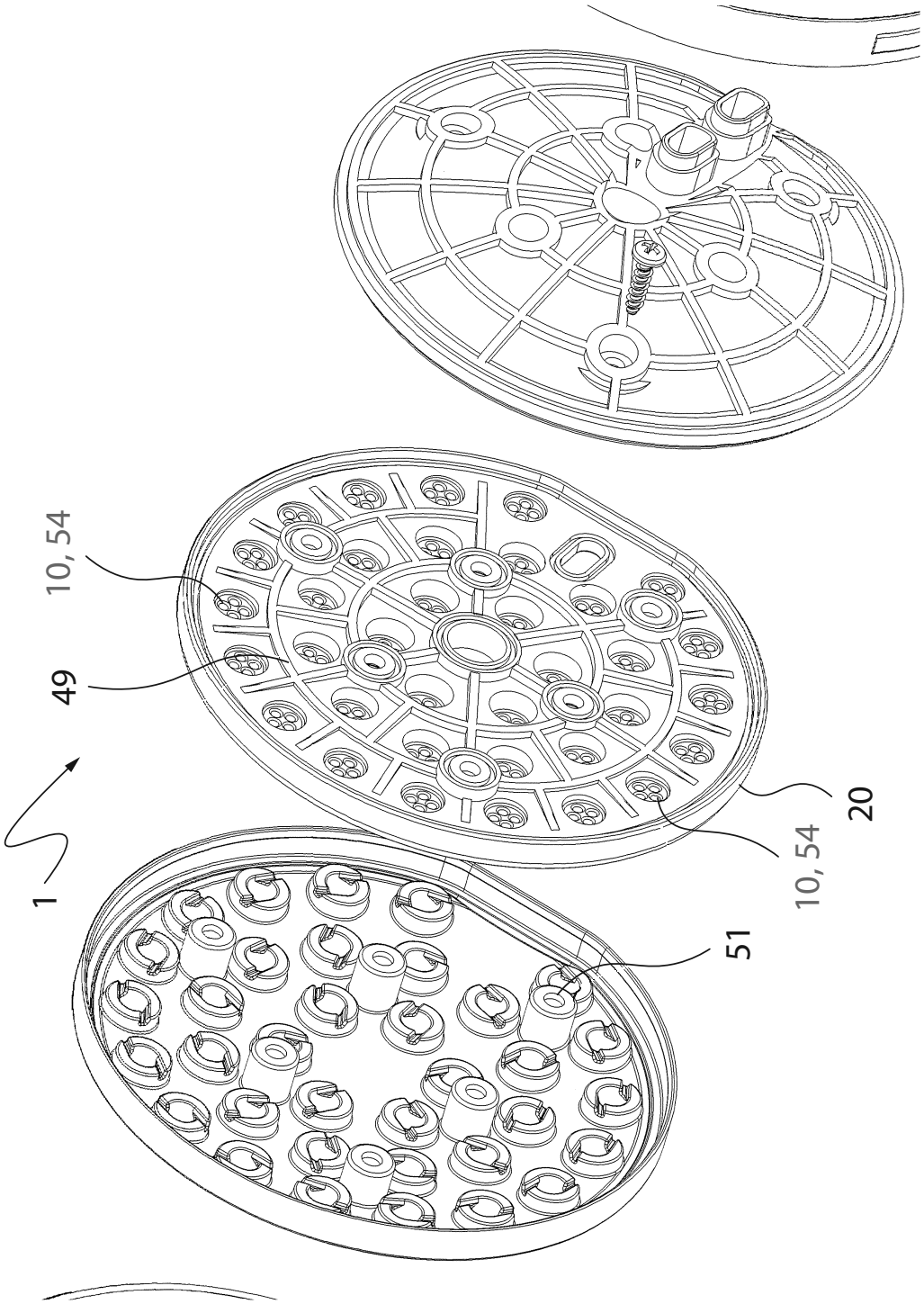

Figure 16

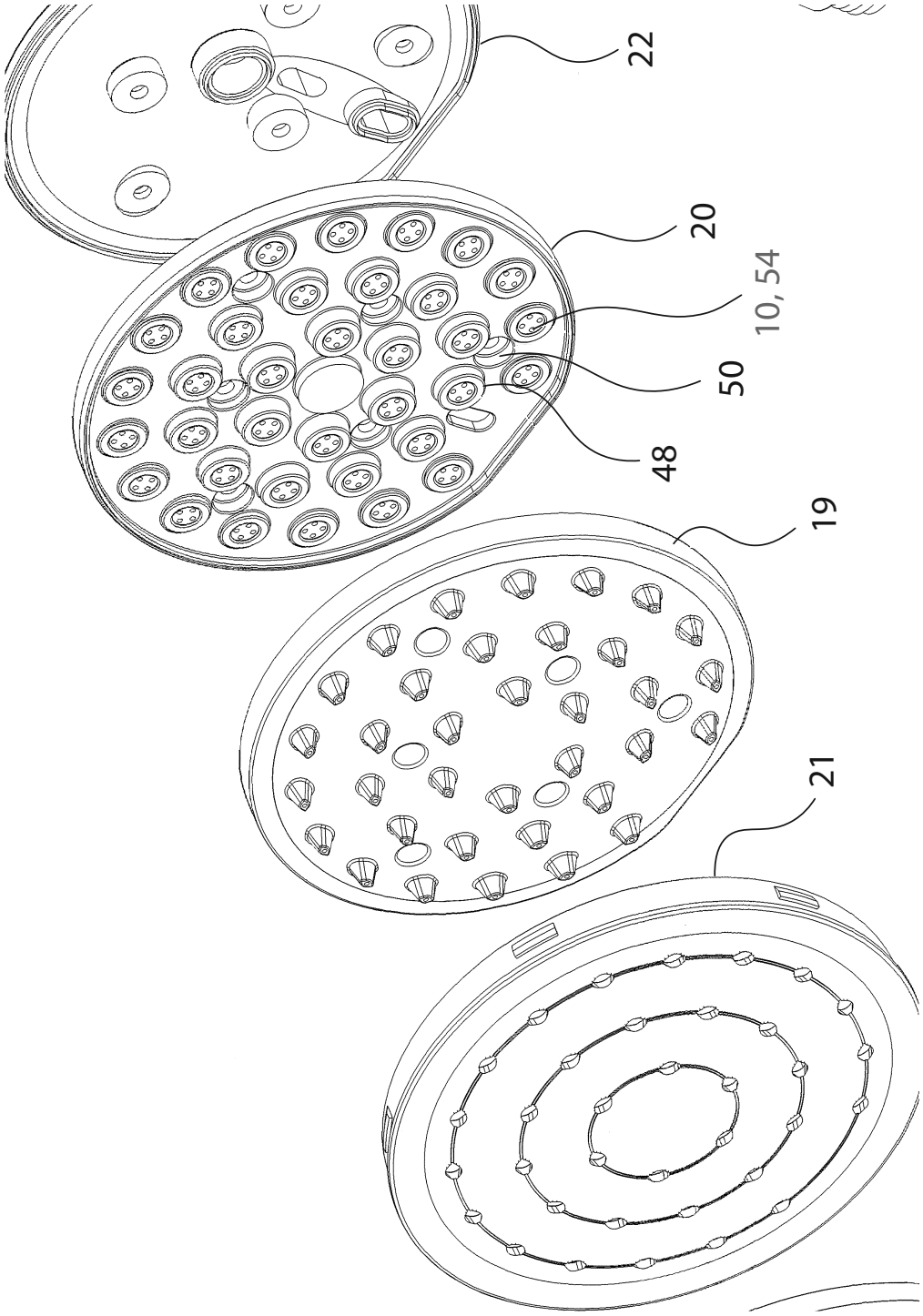

Figure 17

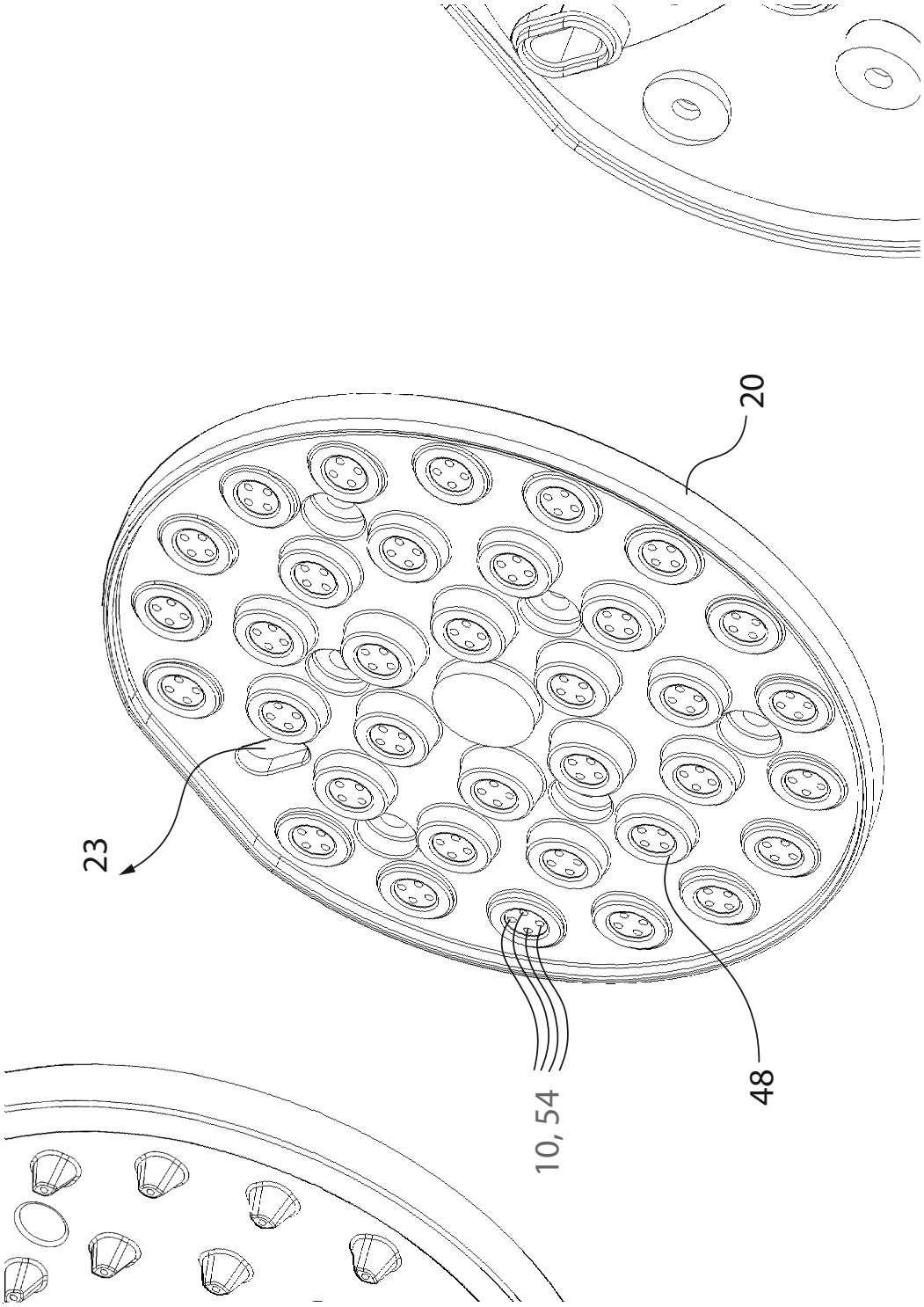

Figure 18

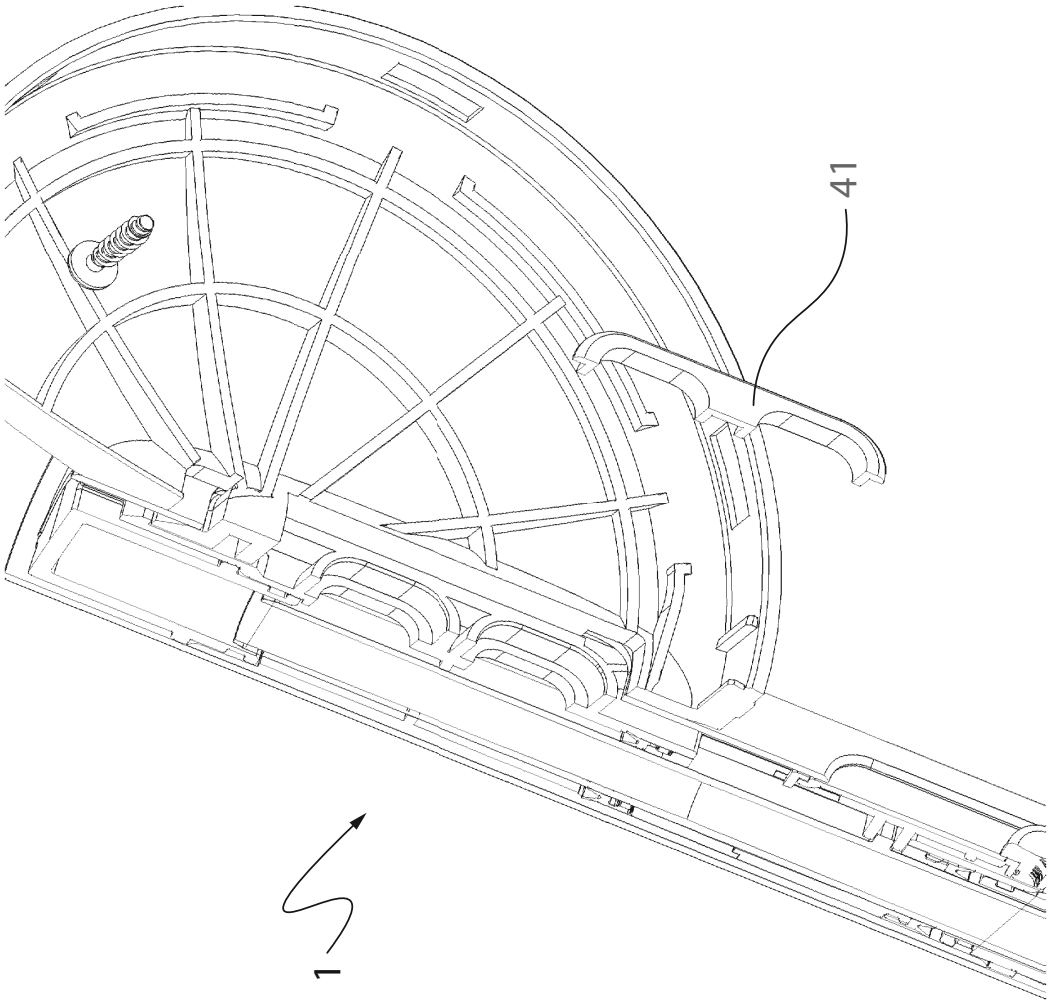

Figure 20