(12) INTERNATIONAL APPLICATION PUBLISHED UNDER THE PATENT COOPERATION TREATY (PCT)

(19) World Intellectual Property Organization
International Bureau

(43) International Publication Date
2 August 2012 (02.08.2012)

WIPO | PCT

(10) International Publication Number
WO 2012/103489 A1

(51) International Patent Classification:
C30B 15/10 (2006.01) *C30B 15/20* (2006.01)

(21) International Application Number:
PCT/US2012/022988

(22) International Filing Date:
27 January 2012 (27.01.2012)

(25) Filing Language: English

(26) Publication Language: English

(30) Priority Data:
13/015,258 27 January 2011 (27.01.2011) US

(71) Applicant *(for all designated States except US)*: **EVERGREEN SOLAR, INC.** [US/US]; 138 Bartlett Street, Marlborough, Massachusetts 01752 (US).

(72) Inventors; and

(75) Inventors/Applicants *(for US only)*: **OLSEN, Kaitlin** [US/US]; 259 Ridge Street, Arlington, Massachusetts 02474 (US). **HUANG, Weidong** [CA/US]; 22 Corn Road, Bolton, Massachusetts 01740 (US). **RICHARDSON, Christine** [US/US]; 79 Chesterfield Road, Northborough, Massachusetts 01532 (US).

(74) Agent: **DITTHAVONG, Phouphanomketh**; Ditthavong Mori & Steiner, P.C., 918 Prince Street, Alexandria, Virginia 22314 (US).

(81) Designated States *(unless otherwise indicated, for every kind of national protection available)*: AE, AG, AL, AM, AO, AT, AU, AZ, BA, BB, BG, BH, BR, BW, BY, BZ, CA, CH, CL, CN, CO, CR, CU, CZ, DE, DK, DM, DO, DZ, EC, EE, EG, ES, FI, GB, GD, GE, GH, GM, GT, HN, HR, HU, ID, IL, IN, IS, JP, KE, KG, KM, KN, KP, KR, KZ, LA, LC, LK, LR, LS, LT, LU, LY, MA, MD, ME, MG, MK, MN, MW, MX, MY, MZ, NA, NG, NI, NO, NZ, OM, PE, PG, PH, PL, PT, QA, RO, RS, RU, RW, SC, SD, SE, SG, SK, SL, SM, ST, SV, SY, TH, TJ, TM, TN, TR, TT, TZ, UA, UG, US, UZ, VC, VN, ZA, ZM, ZW.

[Continued on next page]

(54) Title: CONTROLLING THE TEMPERATURE PROFILE IN A SHEET WAFER

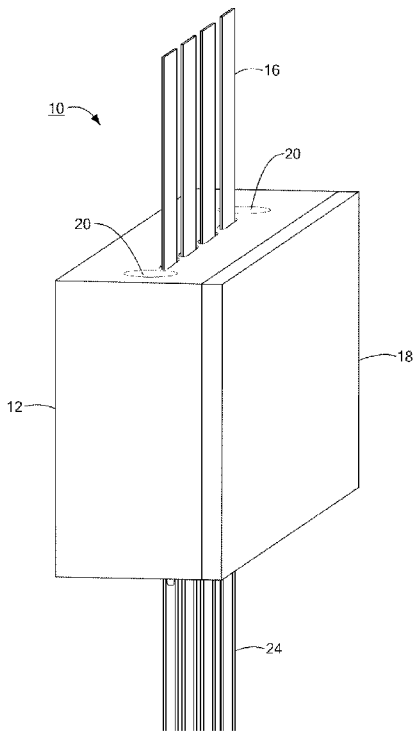

FIG. 1

(57) Abstract: A sheet wafer growth system includes a crucible for containing molten material and an afterheater positioned above the crucible. The afterheater has an inner surface disposed toward the crucible. The system further includes one or more shields adjacent to the inner surface of the afterheater. The afterheater and the shield(s) are configured to allow a sheet wafer to pass adjacent to the shield(s). Each shield has two or more substantially different thermally conductive regions such that the two or more regions are configured to control the temperature profile of the growing sheet wafer.

WO 2012/103489 A1

(84) **Designated States** *(unless otherwise indicated, for every kind of regional protection available)*: ARIPO (BW, GH, GM, KE, LR, LS, MW, MZ, NA, RW, SD, SL, SZ, TZ, UG, ZM, ZW), Eurasian (AM, AZ, BY, KG, KZ, MD, RU, TJ, TM), European (AL, AT, BE, BG, CH, CY, CZ, DE, DK, EE, ES, FI, FR, GB, GR, HR, HU, IE, IS, IT, LT, LU, LV, MC, MK, MT, NL, NO, PL, PT, RO, RS, SE, SI, SK, SM, TR), OAPI (BF, BJ, CF, CG, CI, CM, GA, GN, GQ, GW, ML, MR, NE, SN, TD, TG).

Published:

— *with international search report (Art. 21(3))*