FIGURE 1

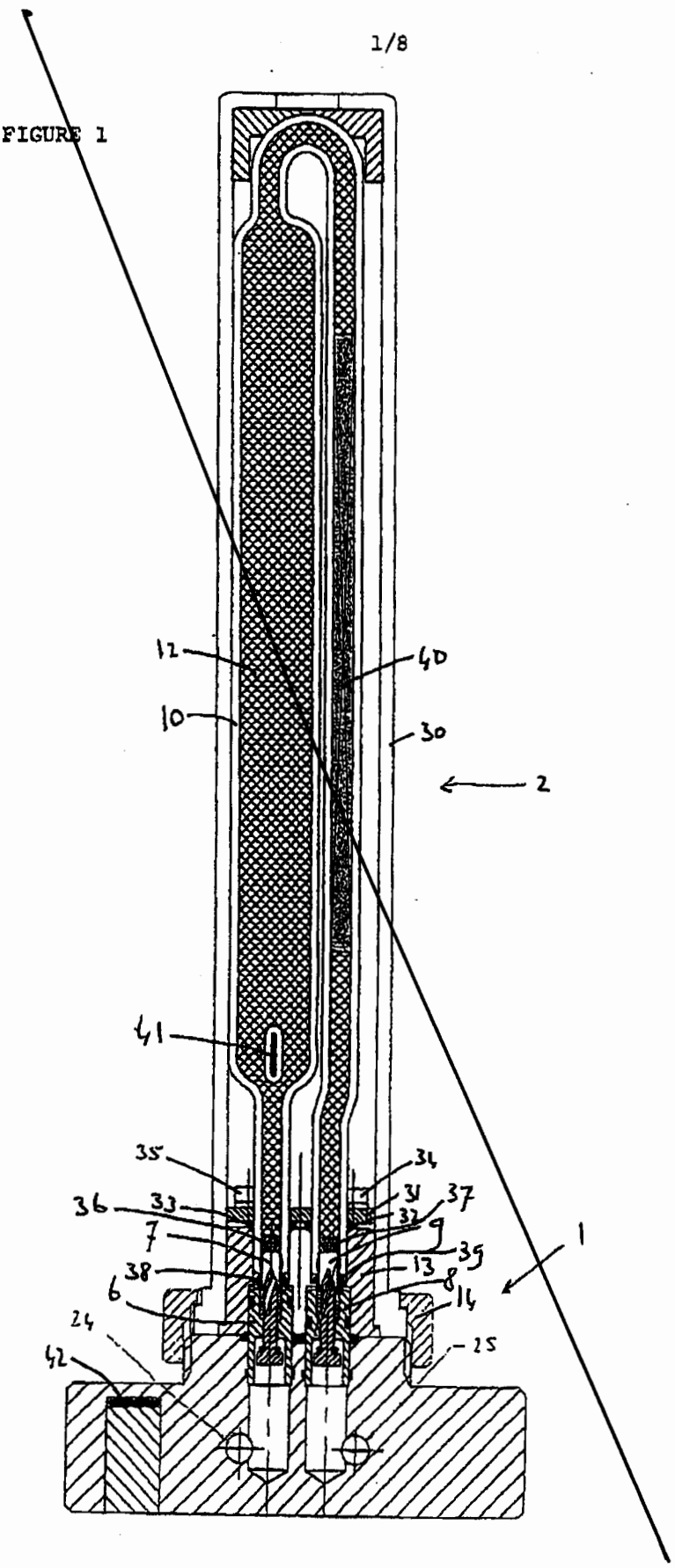

FIGURE 2

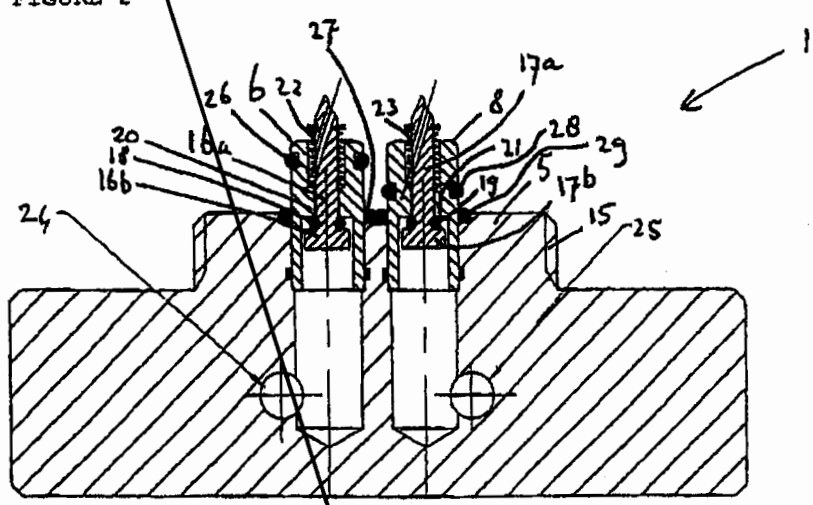

FIGURE 3

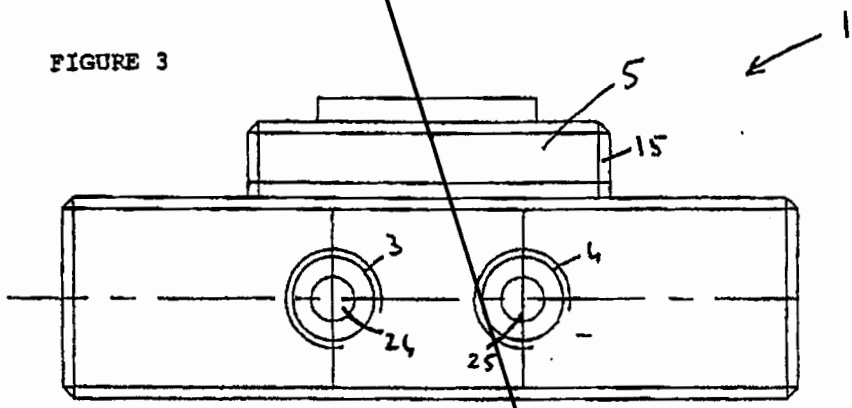

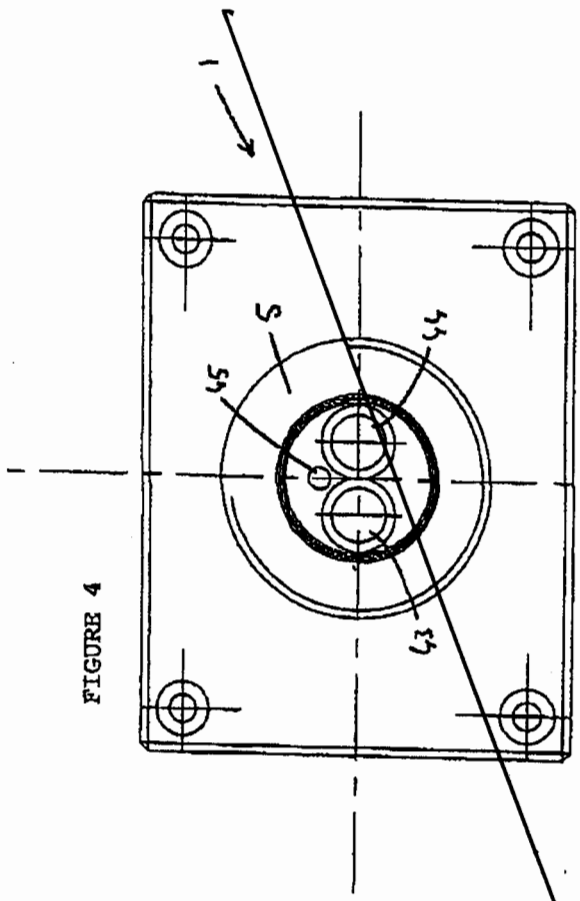

FIGURE 4

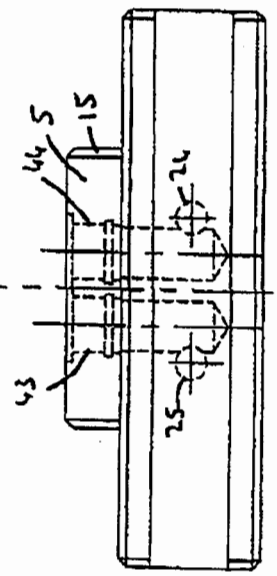

FIGURE 5

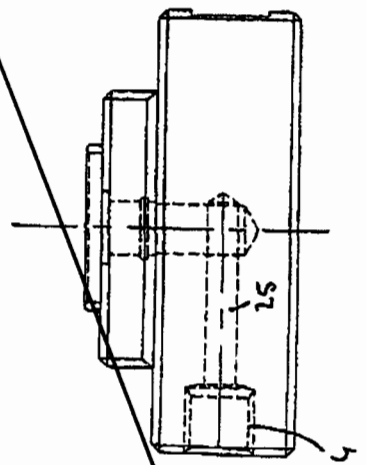

FIGURE 6

FIGURE 7

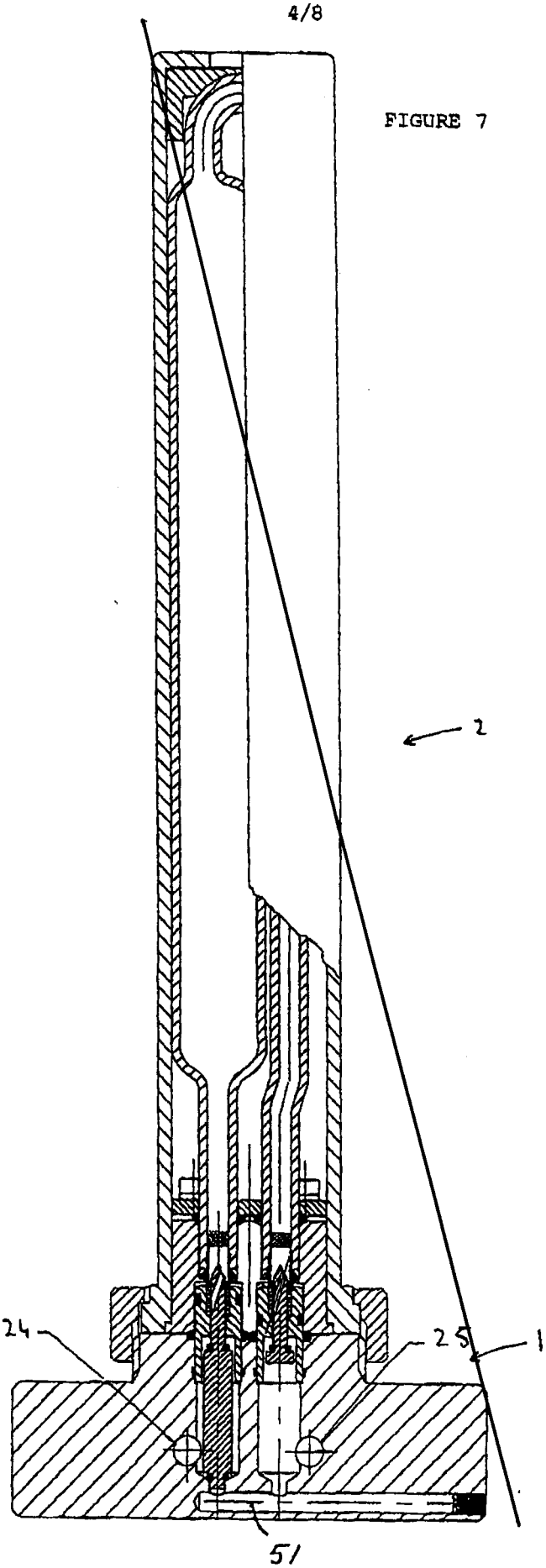

FIGURE 8

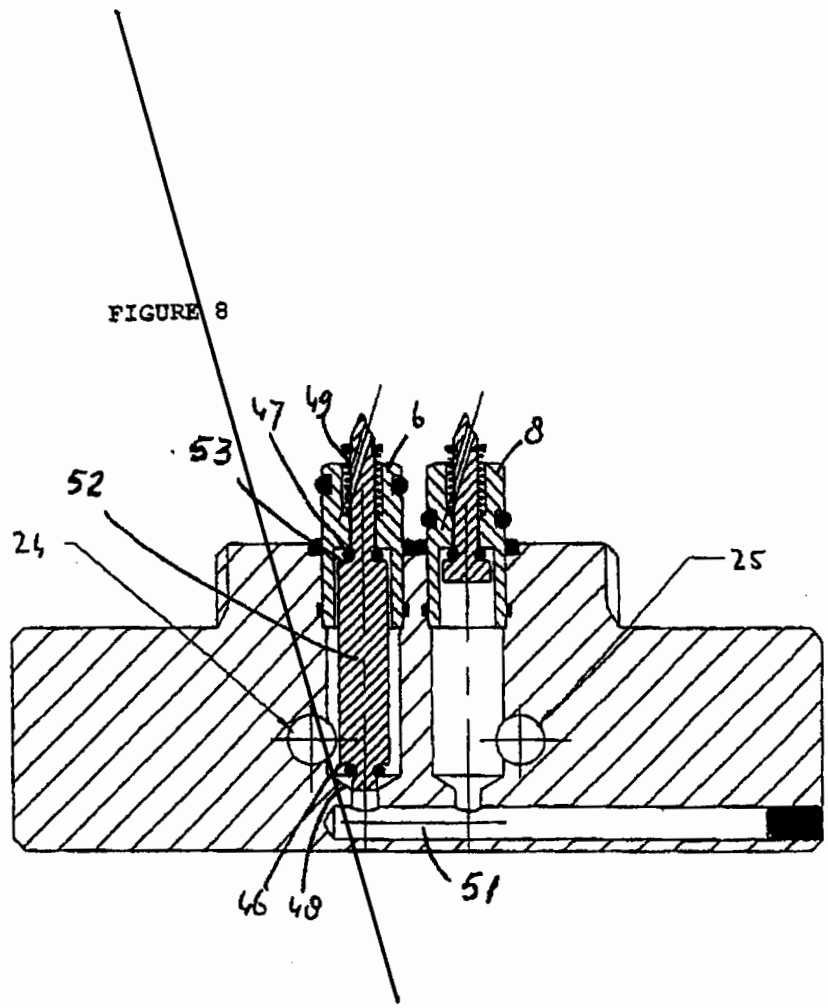

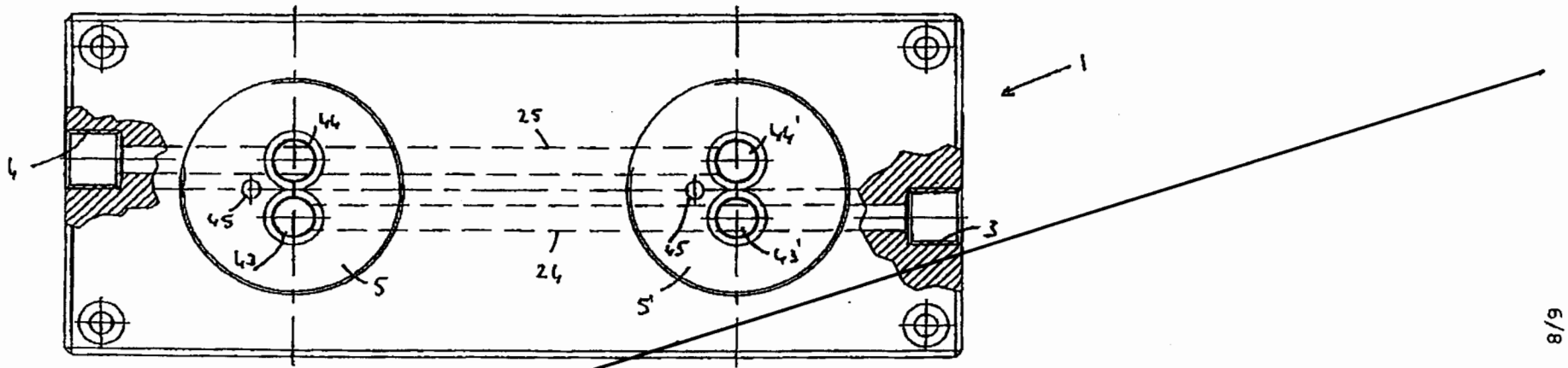

FIGURE 9

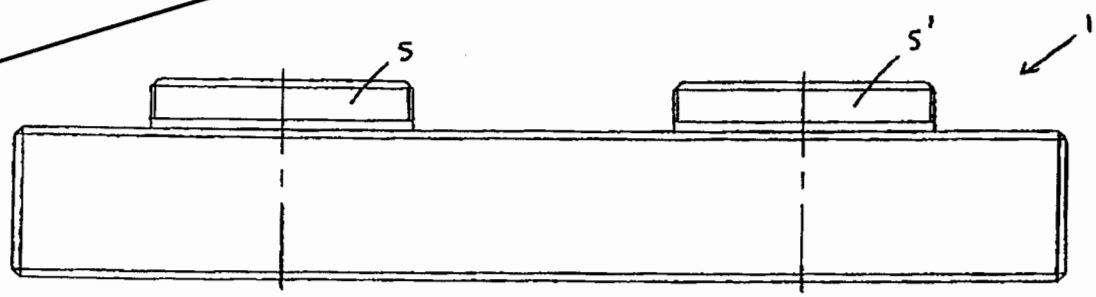

FIGURE 10

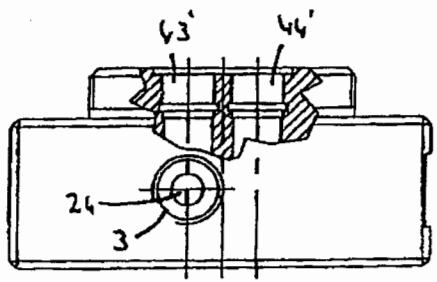

FIGURE 11

FIGURE 12

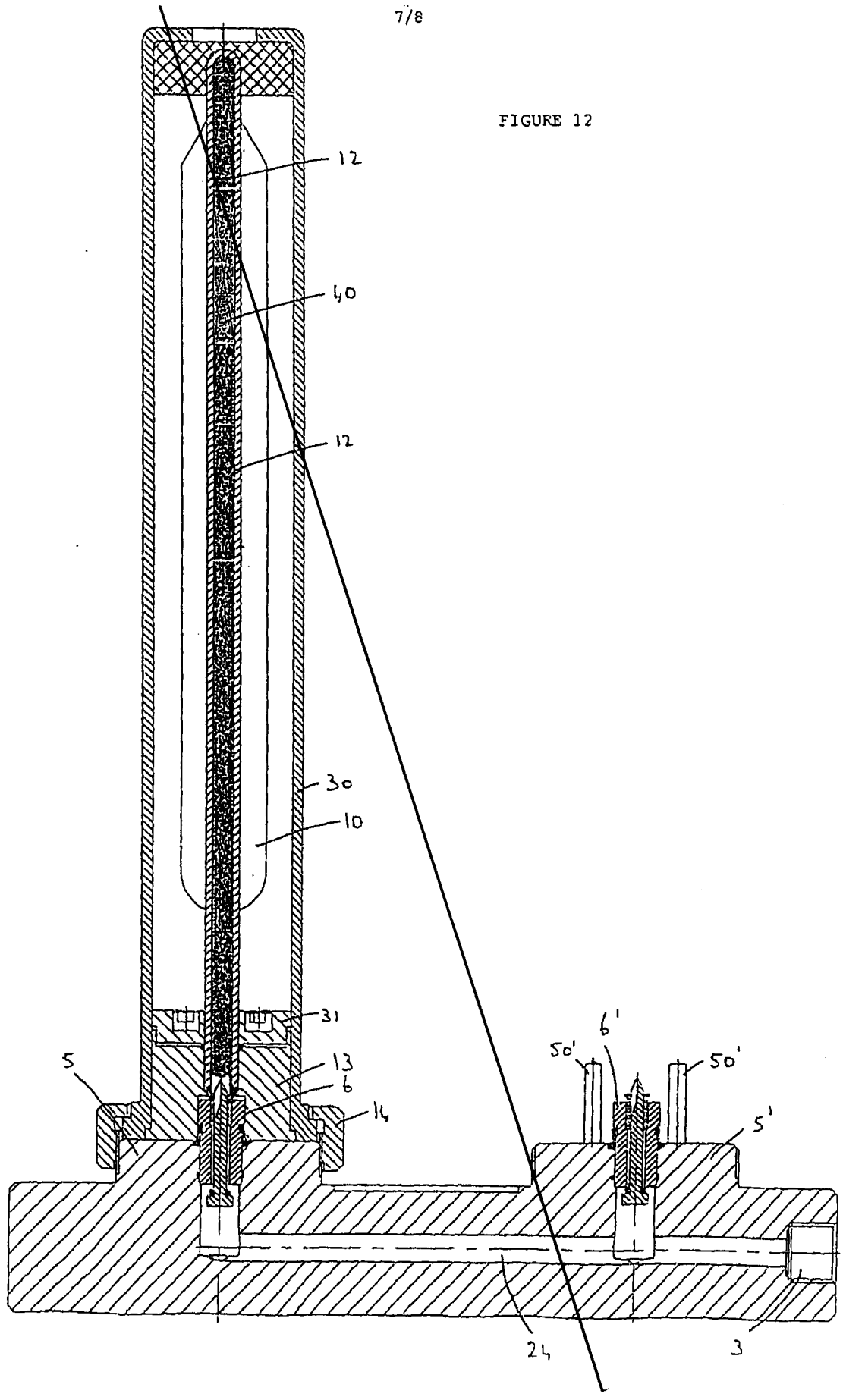

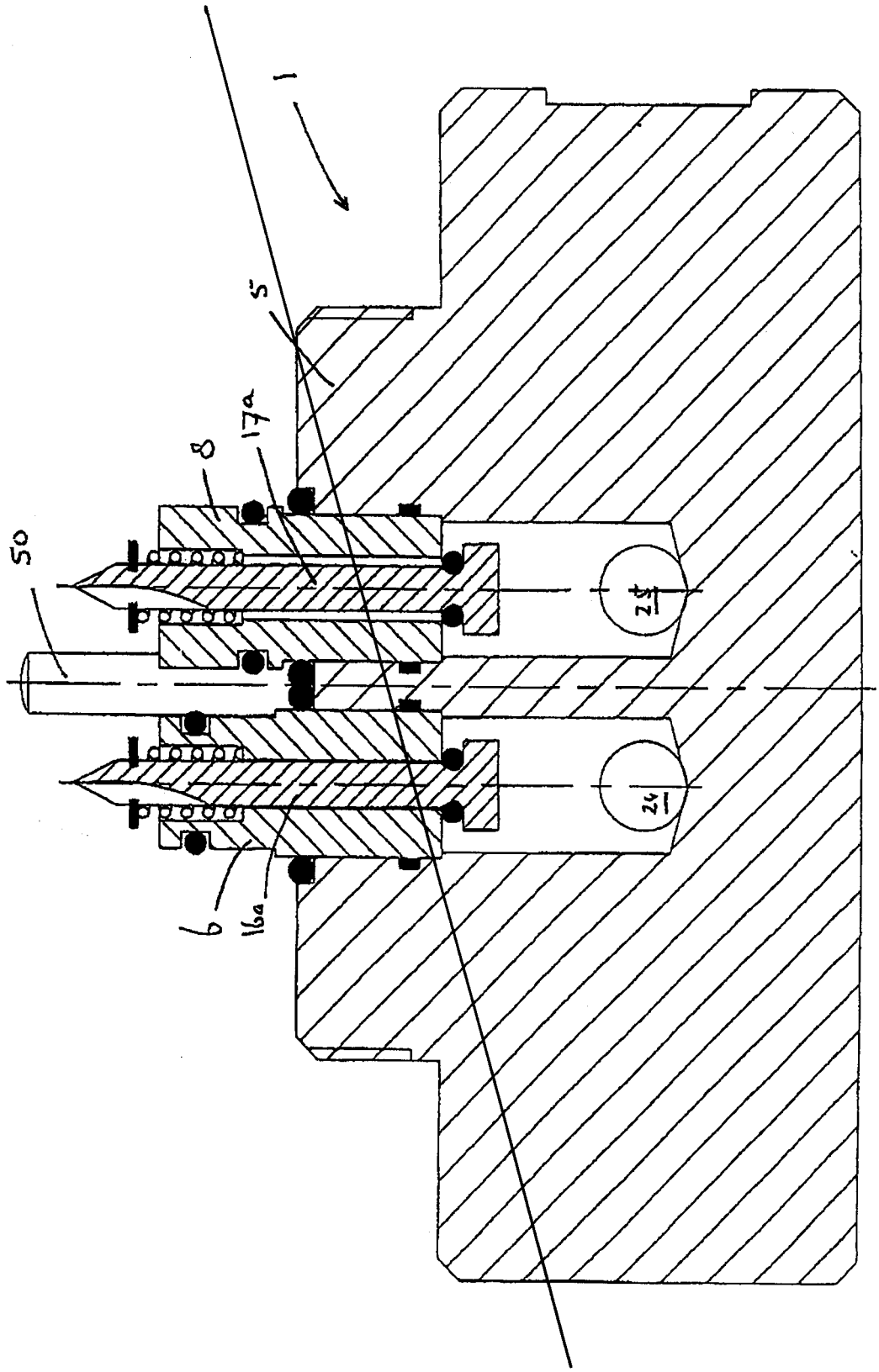

FIGURE 13

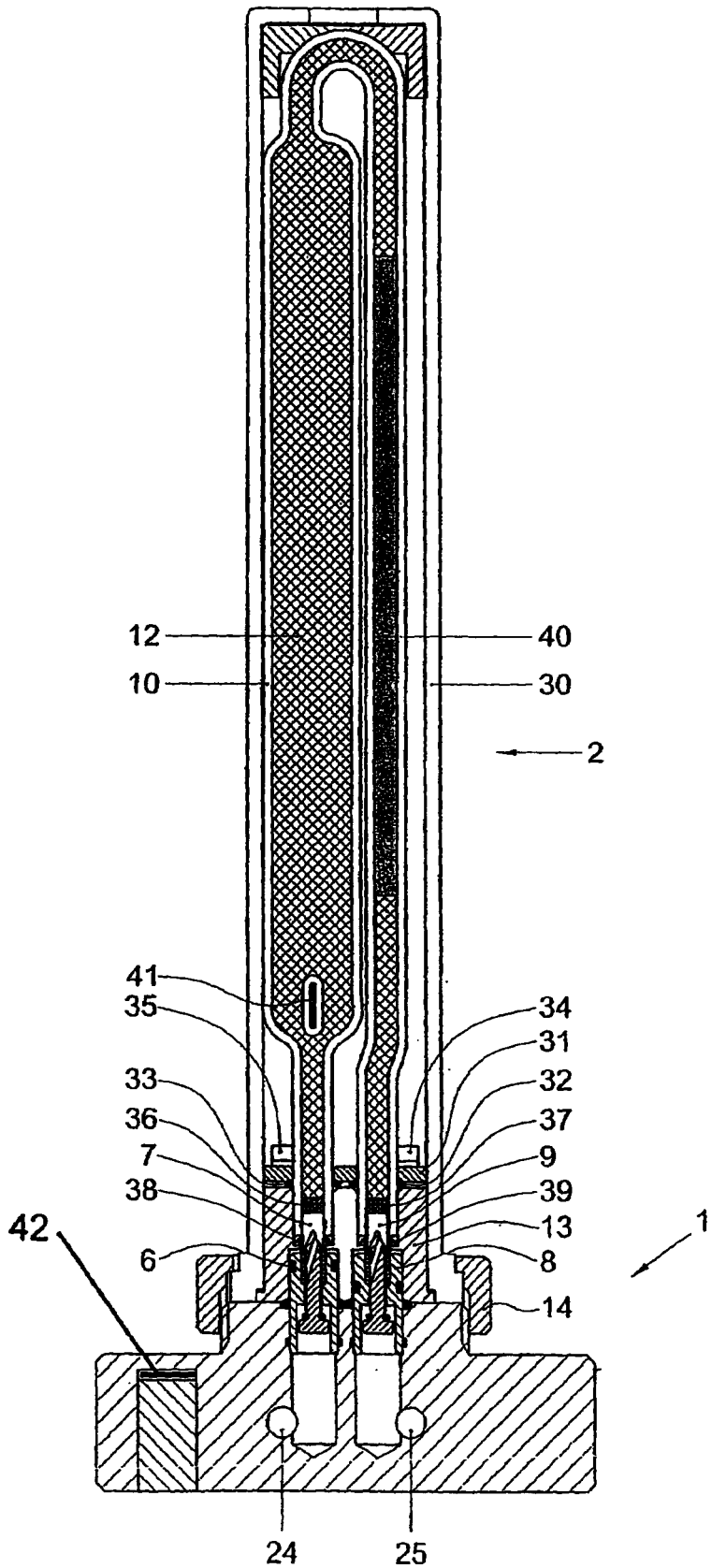

Fig. 1

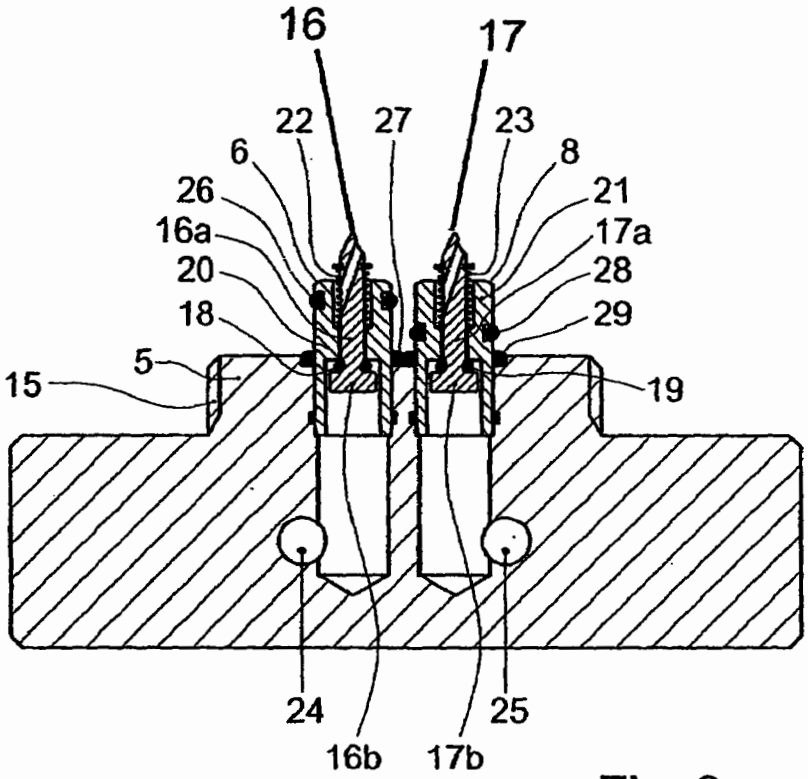
16
17
22
27
23
6
8
26
21
16a
17a
20
28
18
29
5
15
19
24
25
16b
17b

Fig. 2

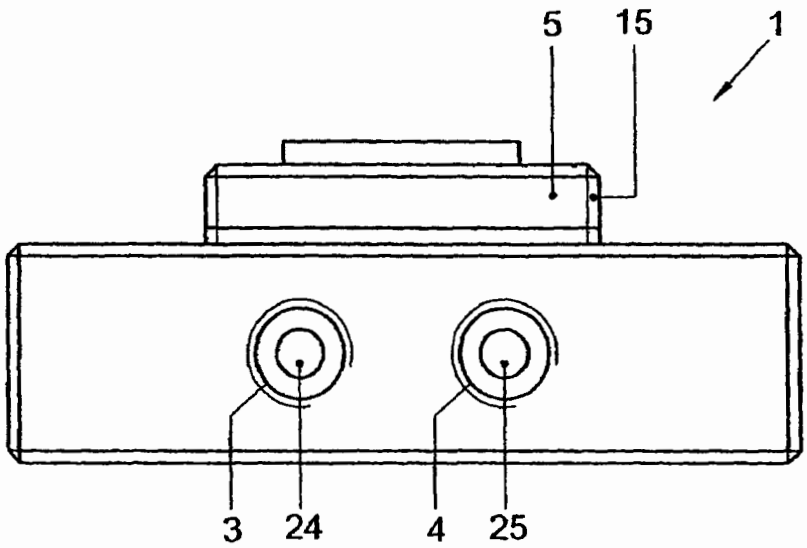
5
15
1
3
24
4
25

Fig. 3

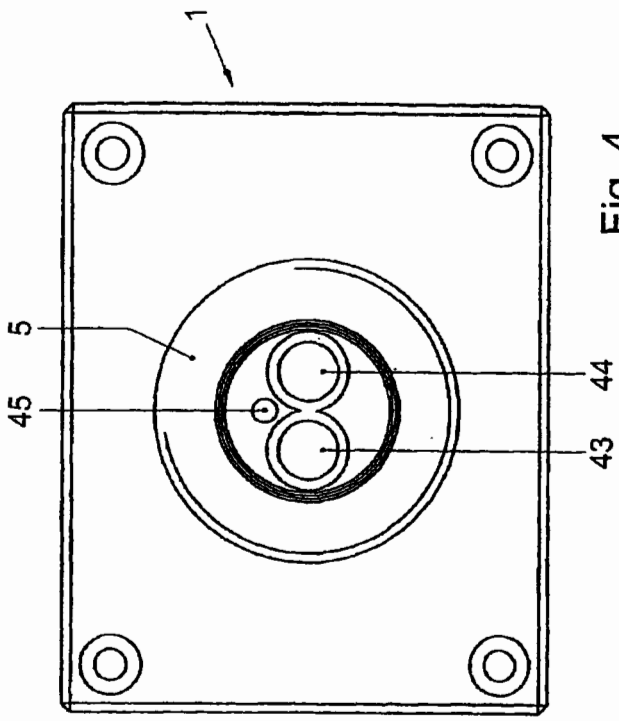

Fig. 4

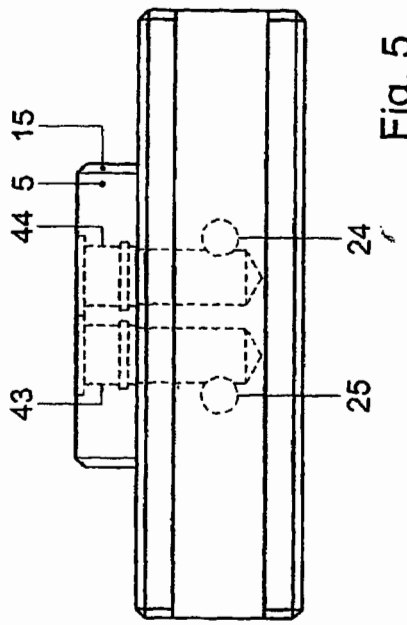

Fig. 5

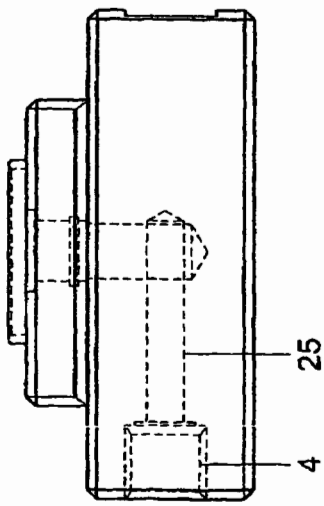

Fig. 6

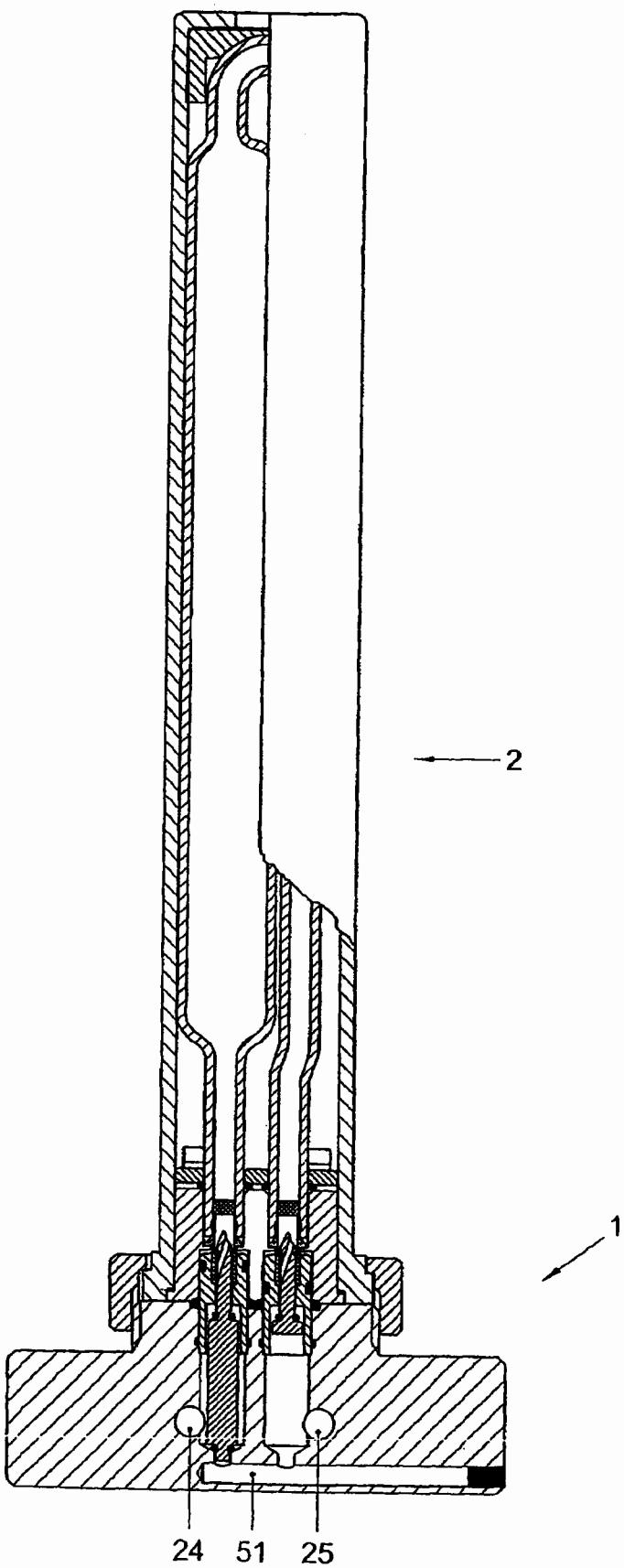

Fig. 7

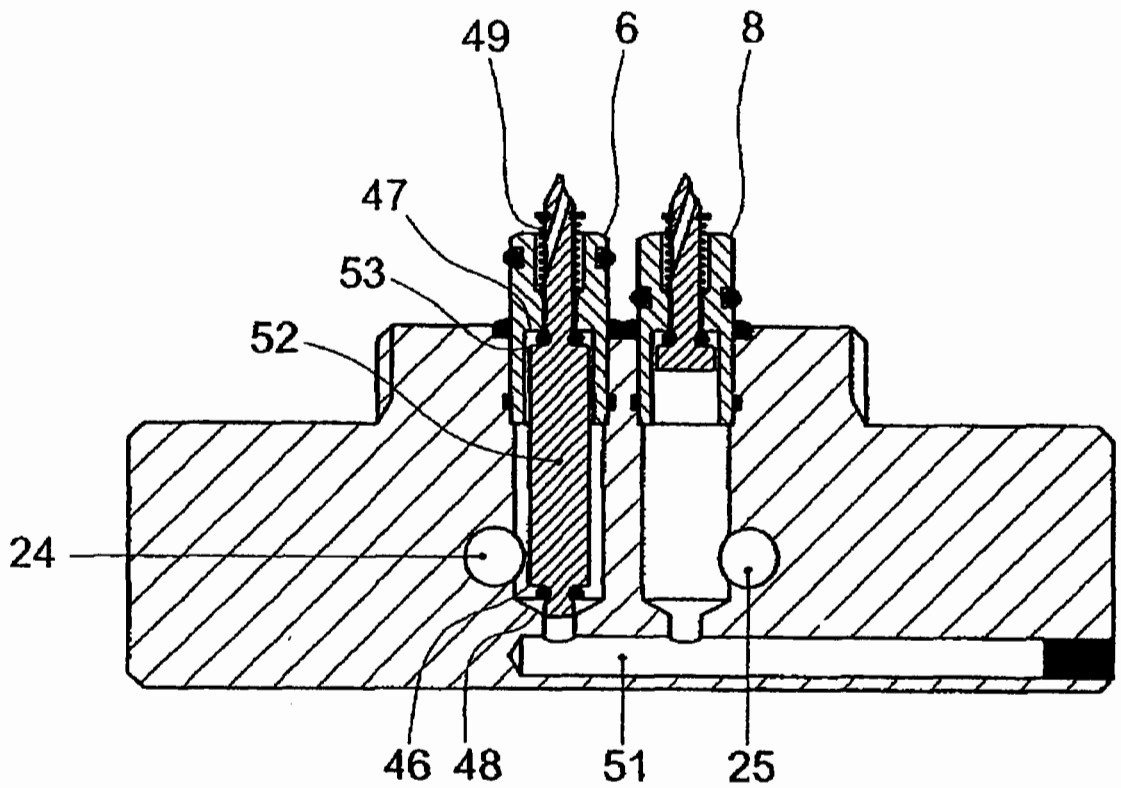

Fig. 8

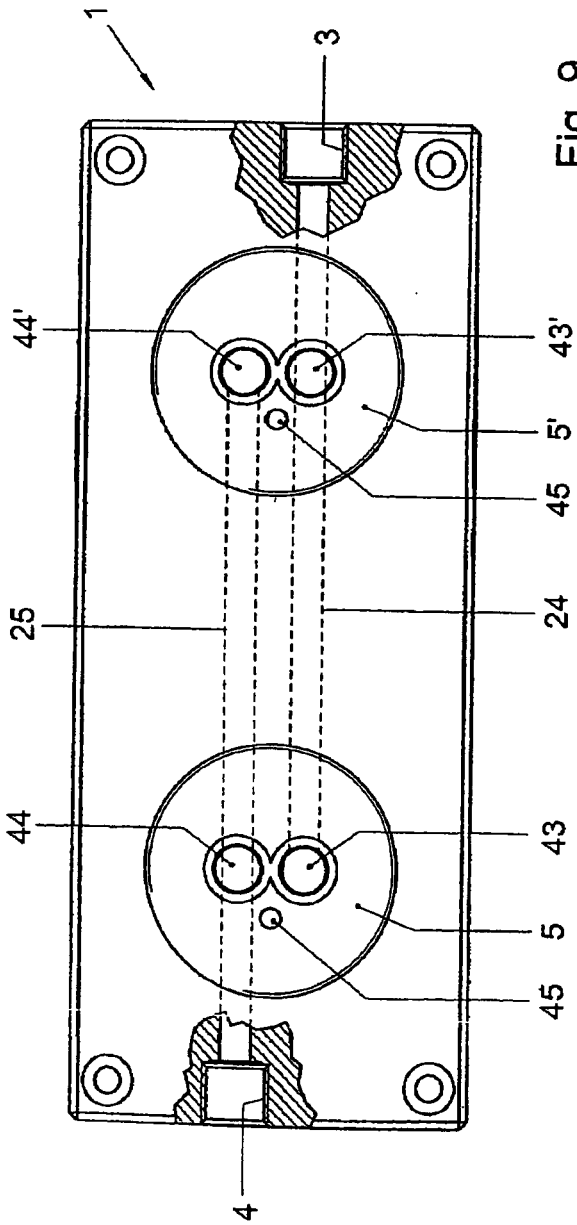

Fig. 9

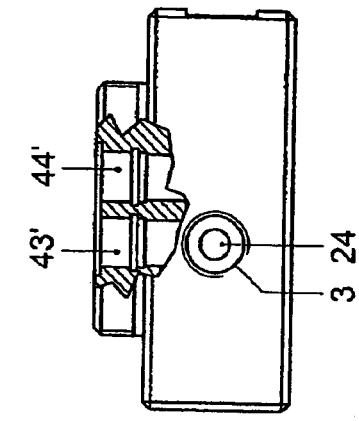

Fig. 11

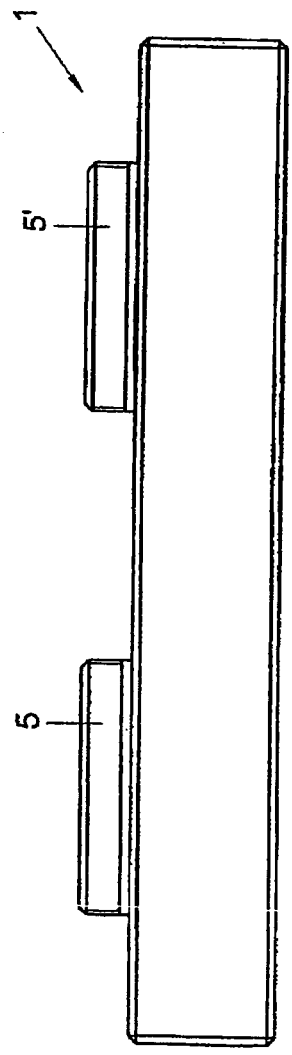

Fig. 10

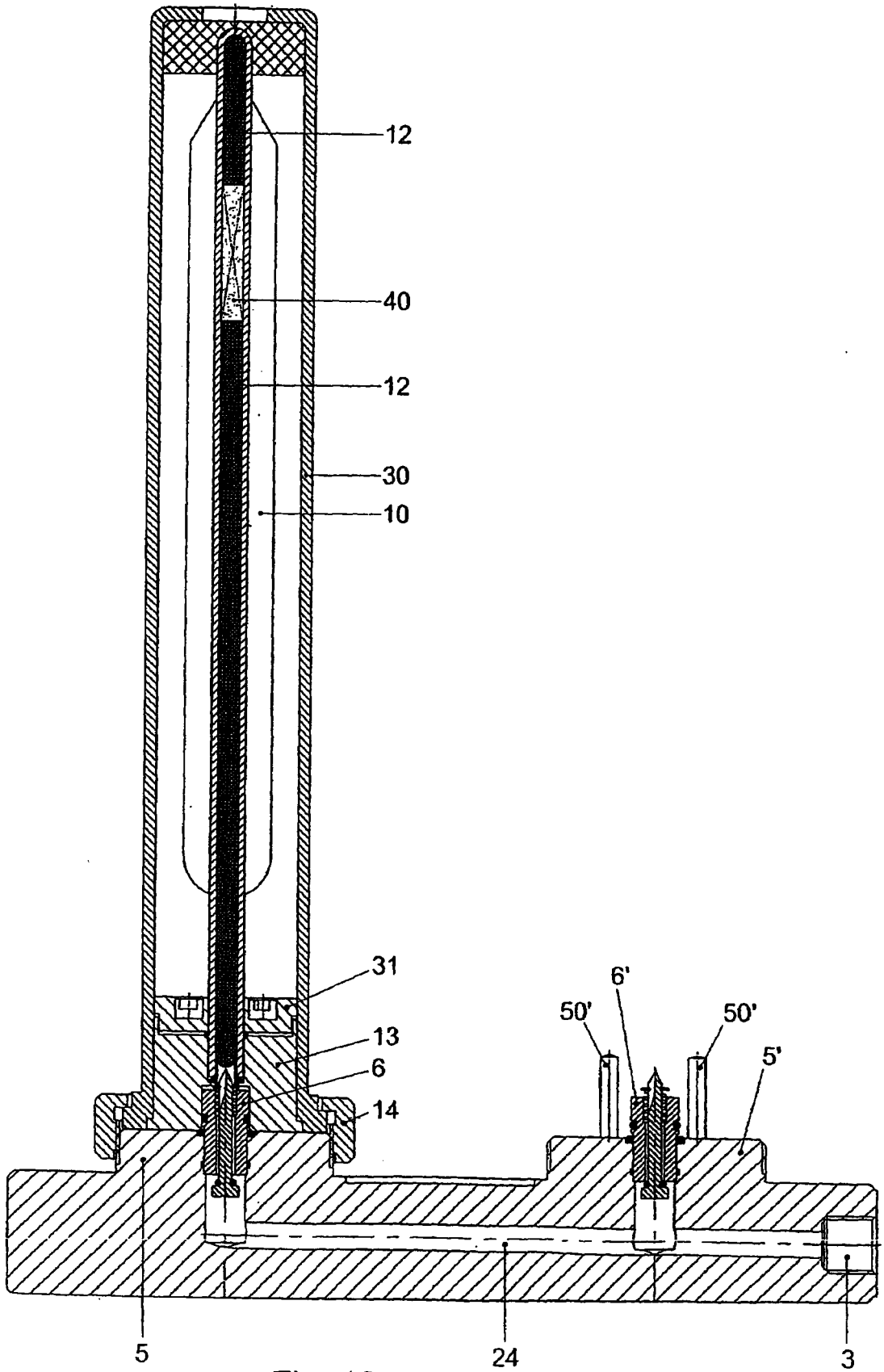

Fig. 12

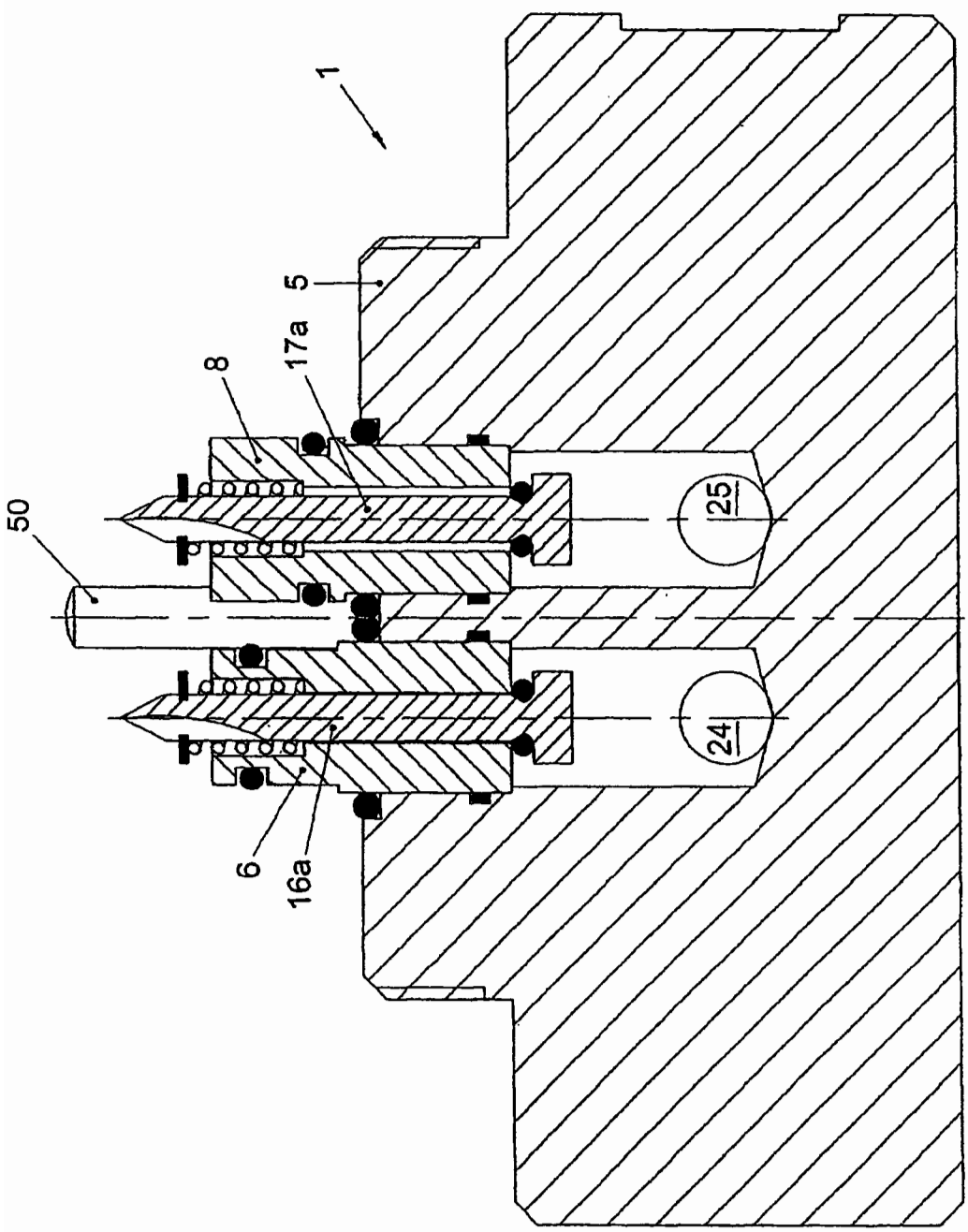

Fig. 13