(12) INTERNATIONAL APPLICATION PUBLISHED UNDER THE PATENT COOPERATION TREATY (PCT)

(19) World Intellectual Property Organization
International Bureau

(43) International Publication Date
24 February 2022 (24.02.2022)

WIPO | PCT

(10) International Publication Number
WO 2022/038241 A1

(51) International Patent Classification:
C12M 1/00 (2006.01) *C12N 5/077* (2010.01)
C12N 5/0735 (2010.01) *A23L 13/00* (2016.01)
C12M 3/00 (2006.01)

(21) International Application Number:
PCT/EP2021/073079

(22) International Filing Date:
19 August 2021 (19.08.2021)

(25) Filing Language: English

(26) Publication Language: English

(30) Priority Data:
63/068,406 21 August 2020 (21.08.2020) US

(71) Applicant: **MERCK PATENT GMBH** [DE/DE]; Frankfurter Strasse 250, 64293 Darmstadt (DE).

(72) Inventors: **WEISSENBACH, Jean-Louis**; c/o EMD Millipore Corporation, 400 Summit Drive, BURLINGTON, Massachusetts 01803 (US). **SYLVIA, Ryan**; c/o EMD Millipore Corporation, 400 Summit Drive, BURLINGTON, Massachusetts 01803 (US). **VON DER BRELIE, Almut**; c/o Merck KGaA, Frankfurter Strasse 250, 64293 DARMSTADT (DE). **BRANDL, Melanie**; c/o Merck KGaA, Frankfurter Strasse 250, 64293 DARMSTADT (DE). **FESENFELD, Michaela**; c/o Merck KGaA, Frankfurter Strasse 250, 64293 DARMSTADT (DE).

(81) Designated States *(unless otherwise indicated, for every kind of national protection available)*: AE, AG, AL, AM, AO, AT, AU, AZ, BA, BB, BG, BH, BN, BR, BW, BY, BZ, CA, CH, CL, CN, CO, CR, CU, CZ, DE, DJ, DK, DM, DO, DZ, EC, EE, EG, ES, FI, GB, GD, GE, GH, GM, GT, HN, HR, HU, ID, IL, IN, IR, IS, IT, JO, JP, KE, KG, KH, KN, KP, KR, KW, KZ, LA, LC, LK, LR, LS, LU, LY, MA, MD, ME, MG, MK, MN, MW, MX, MY, MZ, NA, NG, NI, NO, NZ, OM, PA, PE, PG, PH, PL, PT, QA, RO, RS, RU, RW, SA, SC, SD, SE, SG, SK, SL, ST, SV, SY, TH, TJ, TM, TN, TR, TT, TZ, UA, UG, US, UZ, VC, VN, WS, ZA, ZM, ZW.

(84) Designated States *(unless otherwise indicated, for every kind of regional protection available)*: ARIPO (BW, GH, GM, KE, LR, LS, MW, MZ, NA, RW, SD, SL, ST, SZ, TZ, UG, ZM, ZW), Eurasian (AM, AZ, BY, KG, KZ, RU, TJ, TM), European (AL, AT, BE, BG, CH, CY, CZ, DE, DK, EE, ES, FI, FR, GB, GR, HR, HU, IE, IS, IT, LT, LU, LV, MC, MK, MT, NL, NO, PL, PT, RO, RS, SE, SI, SK, SM, TR), OAPI (BF, BJ, CF, CG, CI, CM, GA, GN, GQ, GW, KM, ML, MR, NE, SN, TD, TG).

(54) **Title:** PROCESS SYSTEM FOR BIOREACTOR-BASED CLEAN MEAT PRODUCTION

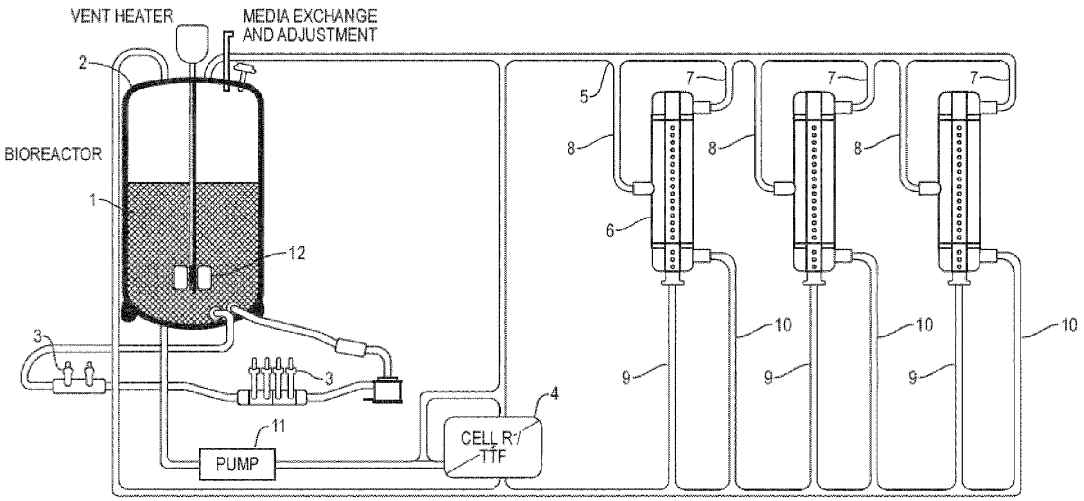

FIG. 1

(57) **Abstract:** The present invention is for a closed environment process for the growth and differentiation of cells and the culturing of cells to confluency for the production of tissue. The tissue may be a clean meat product.

[Continued on next page]

WO 2022/038241 A1

Published:

— *with international search report (Art. 21(3))*

— *before the expiration of the time limit for amending the claims and to be republished in the event of receipt of amendments (Rule 48.2(h))*